PXIe-1073 Specifications

2026-03-24

Contents

PXIe-1073 Specifications 3

PXIe-1073 Specifications

This document contains specifications for the PXIe-1073 chassis.

Caution Specifications are subject to change without notice.

Electrical

The following section provides information about the PXIe-1073 AC input and DC output.

AC Input

Input voltage range	100 to 240 VAC
Operating voltage range	90 to 264 VAC
Input current rating	4 to 2 A
Input frequency	50/60 Hz
Operating frequency range[1]	47 to 63 Hz

Line regulation	
3.3 V	<±0.2%
5 V	<±0.1%
±12 V	<±0.1%

Efficiency	>70% at full load, normal input voltage
Power disconnect	The AC power cable provides main power disconnect. The front-panel power switch controls the internal chassis power supply that provides DC power to the CompactPCI/PXI backplane.

DC Output

Table 1. DC current capacity (I_{mp})

Voltage	Maximum Current
+3.3 V	15 A
+5 V	7.5 A
+12 V	15 A
-12 V	0.75 A
+5 V_{AUX}	1.0 A

Over-current protection	All outputs protected from short circuit

1. The operating range is guaranteed by design.

Table 2. Over-voltage Protection

Over-voltage at	Minimum (Active Range)	Maximum (Active Range)
+3.3 V	3.76 V	4.3 V
+5 V	5.74 V	7.0 V
+12 V	13.4 V	15.6 V

Chassis Cooling

Per slot cooling capacity	38.25 W
Module cooling system	Forced air circulation (positive pressurization) through a 126 CFM fan with High/Auto speed selector
Slot airflow direction	Bottom of module to top of module
Module cooling intake	Bottom of chassis
Module cooling exhaust	Along rear, right side, and top of chassis
Power supply cooling system	Forced air circulation through integrated fan
Power supply cooling intake	Front side of chassis
Power supply cooling exhaust	Rear side of chassis

Environmental

Maximum altitude	2,000 m (800 mbar) (at 25 °C ambient)
Measurement Category	II
Pollution Degree	2

Indoor use only.

Operating Environment

Ambient temperature range	0 °C to 50 °C (Tested in accordance with IEC-60068-2-1 and IEC-60068-2-2. Meets MIL-PRF-28800F Class 3 low temperature limit and MIL-PRF-28800F Class 2 high temperature limit.)
Relative humidity range	20% to 80%, noncondensing (Tested in accordance with IEC-60068-2-56.)

Storage Environment

Ambient temperature range	–40 °C to 71 °C (Tested in accordance with IEC-60068-2-1 and IEC-60068-2-2. Meets MIL-PRF-28800F Class 3 limits.)
Relative humidity range	10% to 95%, noncondensing (Tested in accordance with IEC-60068-2-56.)

Shock and Vibration

Operational shock	30 g peak, half-sine, 11 ms pulse (Tested in accordance with IEC-60068-2-27. Meets MIL-PRF-28800F Class 2 limits.)
Random Vibration	
Operating	5 to 500 Hz, 0.3 g_{rms}
Nonoperating	5 to 500 Hz, 2.4 g_{rms} (Tested in accordance with IEC-60068-2-64. Nonoperating test profile exceeds the requirements of MIL-PRF-28800F, Class 3.)

Sound Pressure Level (at Operator Position)

(Tested in accordance with ISO 7779. Meets MIL-PRF-28800F requirements.)

Auto fan (up to ~25 °C ambient)	43.3 dBA
High fan	58.3 dBA

Sound Power

Auto fan (up to ~25 °C ambient)	51.3 dBA
High fan	64.6 dBA

Safety Compliance Standards

This product is designed to meet the requirements of the following electrical equipment safety standards for measurement, control, and laboratory use:

- IEC 61010-1, EN 61010-1
- UL 61010-1, CSA C22.2 No. 61010-1

Note For safety certifications, refer to the product label or the Product Certifications and Declarations section.

Electromagnetic Compatibility

This product meets the requirements of the following EMC standards for electrical equipment for measurement, control, and laboratory use:

- EN 61326 (IEC 61326): Class A emissions; Basic immunity
- EN 55011 (CISPR 11): Group 1, Class A emissions
- AS/NZS CISPR 11: Group 1, Class A emissions
- FCC 47 CFR Part 15B: Class A emissions
- ICES-001: Class A emissions

Note For the standards applied to assess the EMC of this product, refer to the *Online Product Certification* section.

Note For EMC compliance, operate this device with shielded cabling.

CE Compliance CE

This product meets the essential requirements of applicable European Directives, as follows:

- 2014/35/EU; Low-Voltage Directive (safety)
- 2014/30/EU; Electromagnetic Compatibility Directive (EMC)
- 2011/65/EU; Restriction of Hazardous Substances (RoHS)

- 2014/53/EU; Radio Equipment Directive (RED)
- 2014/34/EU; Potentially Explosive Atmospheres (ATEX)

Product Certifications and Declarations

Refer to the product Declaration of Conformity (DoC) for additional regulatory compliance information. To obtain product certifications and the DoC for NI products, visit ni.com/product-certifications, search by model number, and click the appropriate link.

Environmental Management

NI is committed to designing and manufacturing products in an environmentally responsible manner. NI recognizes that eliminating certain hazardous substances from our products is beneficial to the environment and to NI customers.

For additional environmental information, refer to the *Engineering a Healthy Planet* web page at ni.com/environment. This page contains the environmental regulations and directives with which NI complies, as well as other environmental information not included in this document.

EU and UK Customers

- **Waste Electrical and Electronic Equipment (WEEE)**—At the end of the product life cycle, all NI products must be disposed of according to local laws and regulations. For more information about how to recycle NI products in your region, visit ni.com/environment/weee.

电子信息产品污染控制管理办法（中国RoHS）

- **中国RoHS**— NI符合中国电子信息产品中限制使用某些有害物质指令(RoHS)。关于NI中国RoHS合规性信息，请登录 `ni.com/environment/rohs_china`。(For information about China RoHS compliance, go to `ni.com/environment/rohs_china`.)

Backplane

Size	3U-sized; one system slot (with three system expansion slots) and 5 peripheral slots. Compliant with IEEE 1101.10 mechanical packaging. PXI Express Specification compliant. Accepts both PXI Express and CompactPCI (PICMG 2.0 R 3.0) 3U modules.
V (I/O)[2]	+5
Backplane bare-board material	UL 94 V-0 Recognized
Backplane connectors	Conforms to IEC 917 and IEC 1076-4-101, UL 94 V-0 rated

System Synchronization Clocks (PXI_CLK10, PXIe_CLK100, PXIe_SYNC100)

10 MHz System Reference Clock: PXI_CLK10

Maximum slot-to-slot skew	250 ps
Accuracy	±25 ppm max (guaranteed over the operating temperature range)

Note The 10 MHz system reference clock does not require calibration.

2. V(I/O) is connected to the +5 V DC power plane, so the same specifications apply to V(I/O) and +5 V .

Maximum jitter	5 ps RMS phase-jitter (10 Hz–1 MHz range)
Duty-factor	45% to 55%
Unloaded signal swing	3.3 V ±0.3 V

100 MHz System Reference Clock: PXIe_CLK100 and PXIe_SYNC100

Maximum slot-to-slot skew	100 ps
Accuracy	±25 ppm max (guaranteed over the operating temperature range)
Maximum jitter	3 ps RMS phase-jitter (10 Hz to 12 kHz range), 2 ps RMS phase-jitter (12 kHz to 20 MHz range)
Duty-factor for PXIe_CLK100	45% to 55%
Absolute differential voltage (When terminated with a 50 Ω load to 1.30 V or Thévenin equivalent)	400 mV to 1000 mV

Note For other specifications, refer to the *PXI-5 PXI Express Hardware Specification*.

Mechanical

Standard chassis dimensions	
Height	6.97 in. (177 mm)
Width	10.12 in. (257.1 mm)
Depth	8.38 in. (212.8 mm)

Weight	11.0 lb (5.0 kg)
Chassis materials	Sheet Aluminum, Extruded Aluminum, Cold Rolled Steel, Nylon
Finish	Clear Chromate Conversion Coat on Aluminum Electrodeposited Nickel Plate Plate on Cold Rolled Steel Polyester Urethane Powder Paint

The following figures show the PXIe-1073 chassis dimensions. The holes shown are for the installation of the optional rack mount kits. You can install those kits on the front or rear of the chassis, depending on which end of the chassis you want to face toward the front of the instrument cabinet. Notice that the front and rear chassis mounting holes (size M4) are symmetrical.

Figure 1. PXIe-1073 Chassis Dimensions (Front and Side)

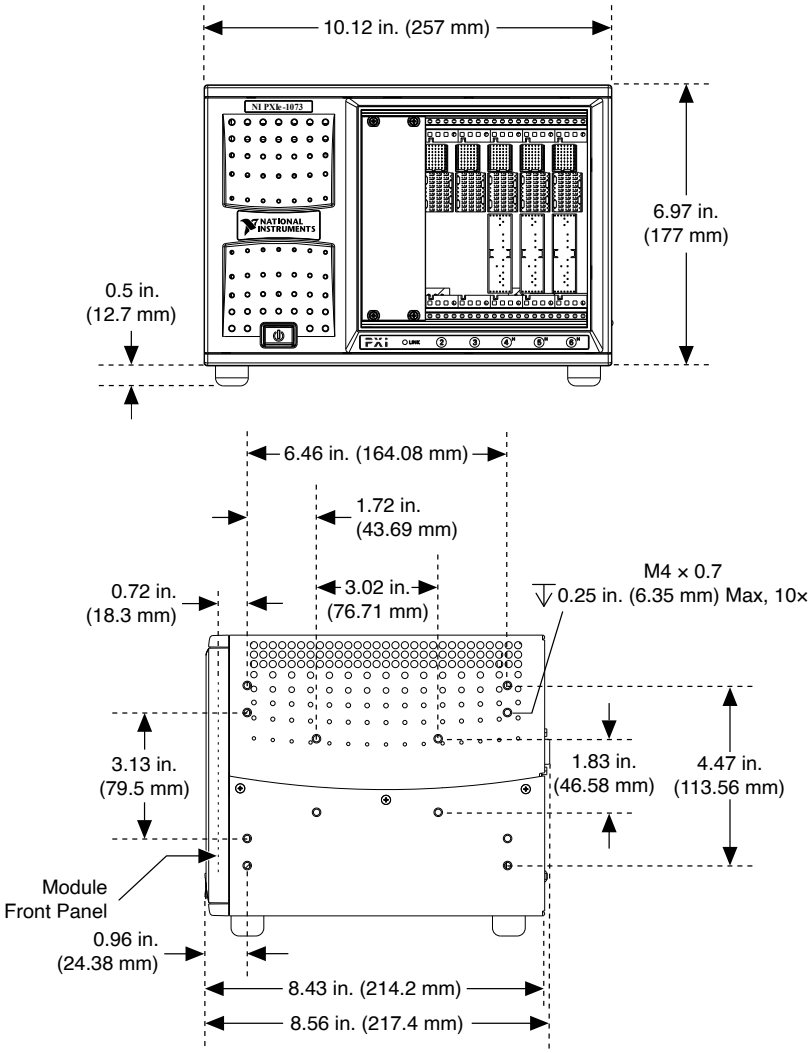

Figure 1. PXIe-1073 Chassis Dimensions (Bottom)

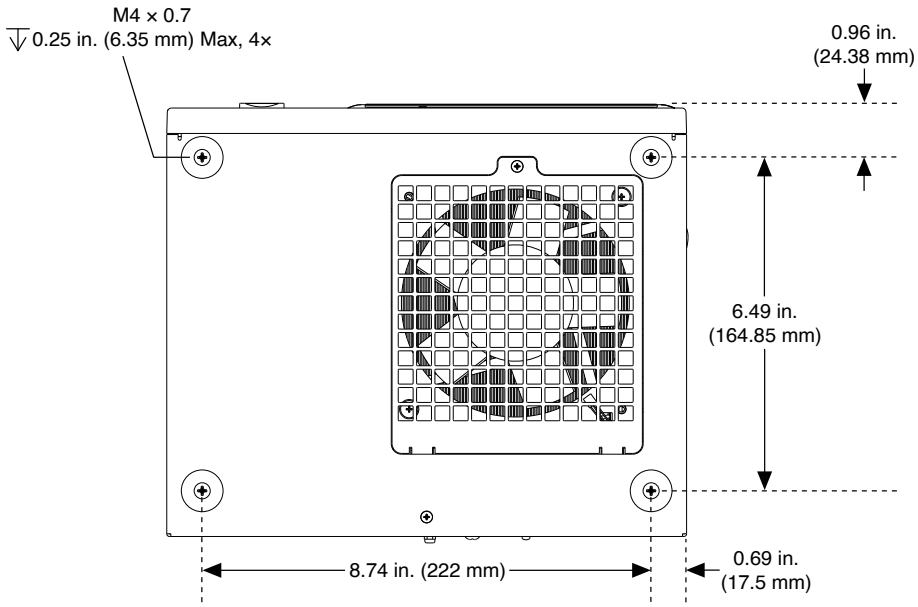

Figure 1. NI Chassis Rack Mount Kit Components

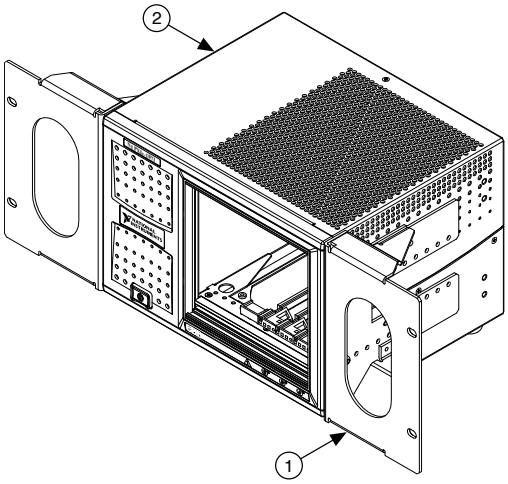

1. PXI-1031 Rack Mount Kit (P/N 778948-01)
2. PXIe-1073 Chassis

© 2026 National Instruments Corporation.