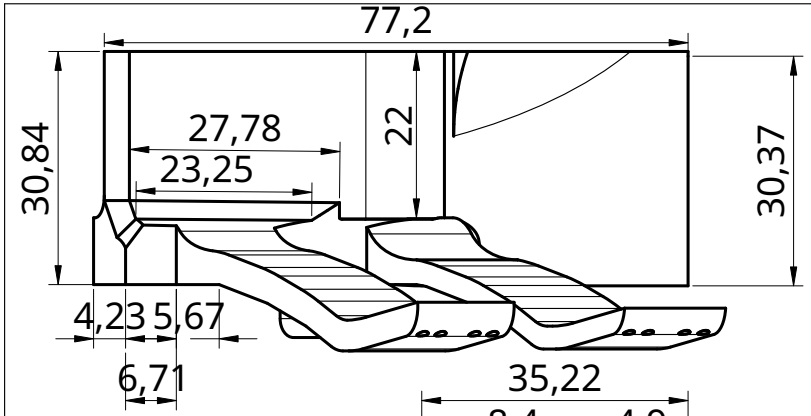

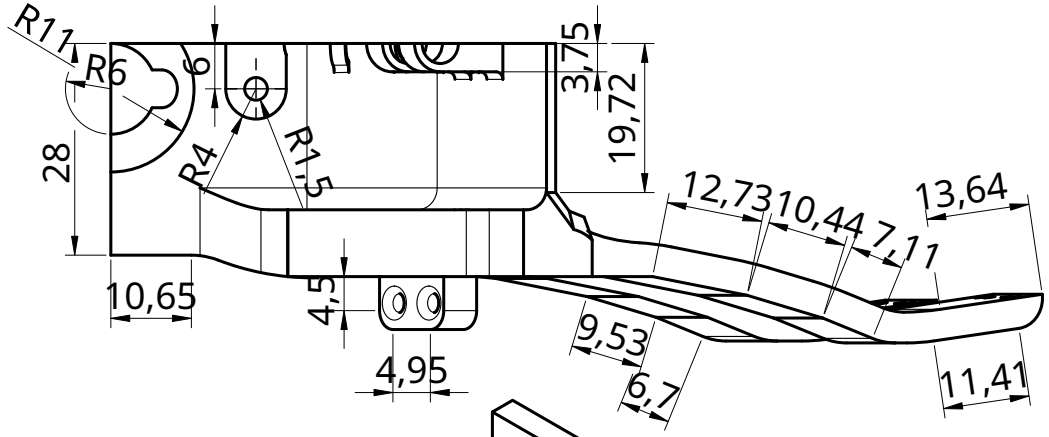

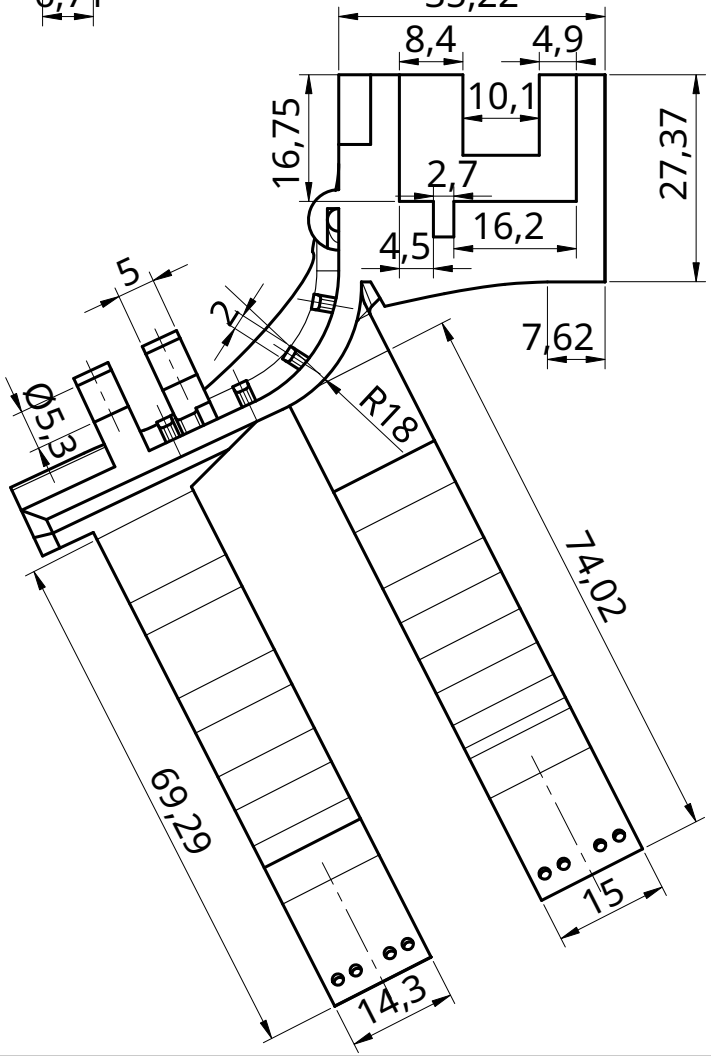

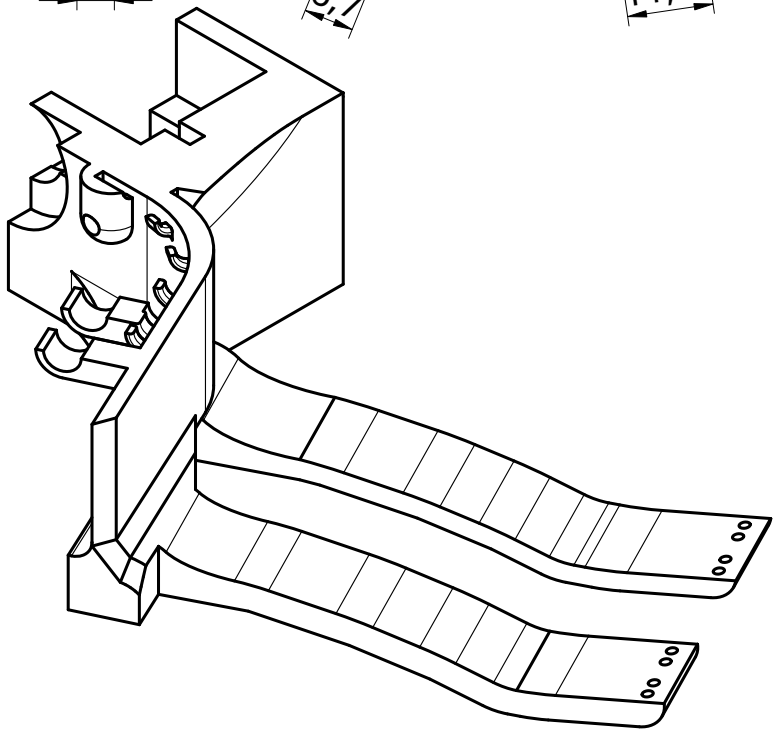

UNLESS OTHERWISE SPECIFIED, DIMENSIONS ARE IN MILLIMETERS		NAME	SIGNATURE	DATE
ANGULAR = ± °	DRAWN	Gloria Palma		2023-10-27
SURFACE FINISH	CHECKED			
	APPROVED			
DO NOT SCALE DRAWING				
BREAK ALL SHARP EDGES AND REMOVE BURRS				
FIRST ANGLE PROJECTION	MATERIAL	PLA	FINISH	

TITLE

Segunda parte del soporte de la prótesis

SIZE	DWG NO.	REV.
A4		

SCALE	WEIGHT	SHEET
1:1		1 of 1