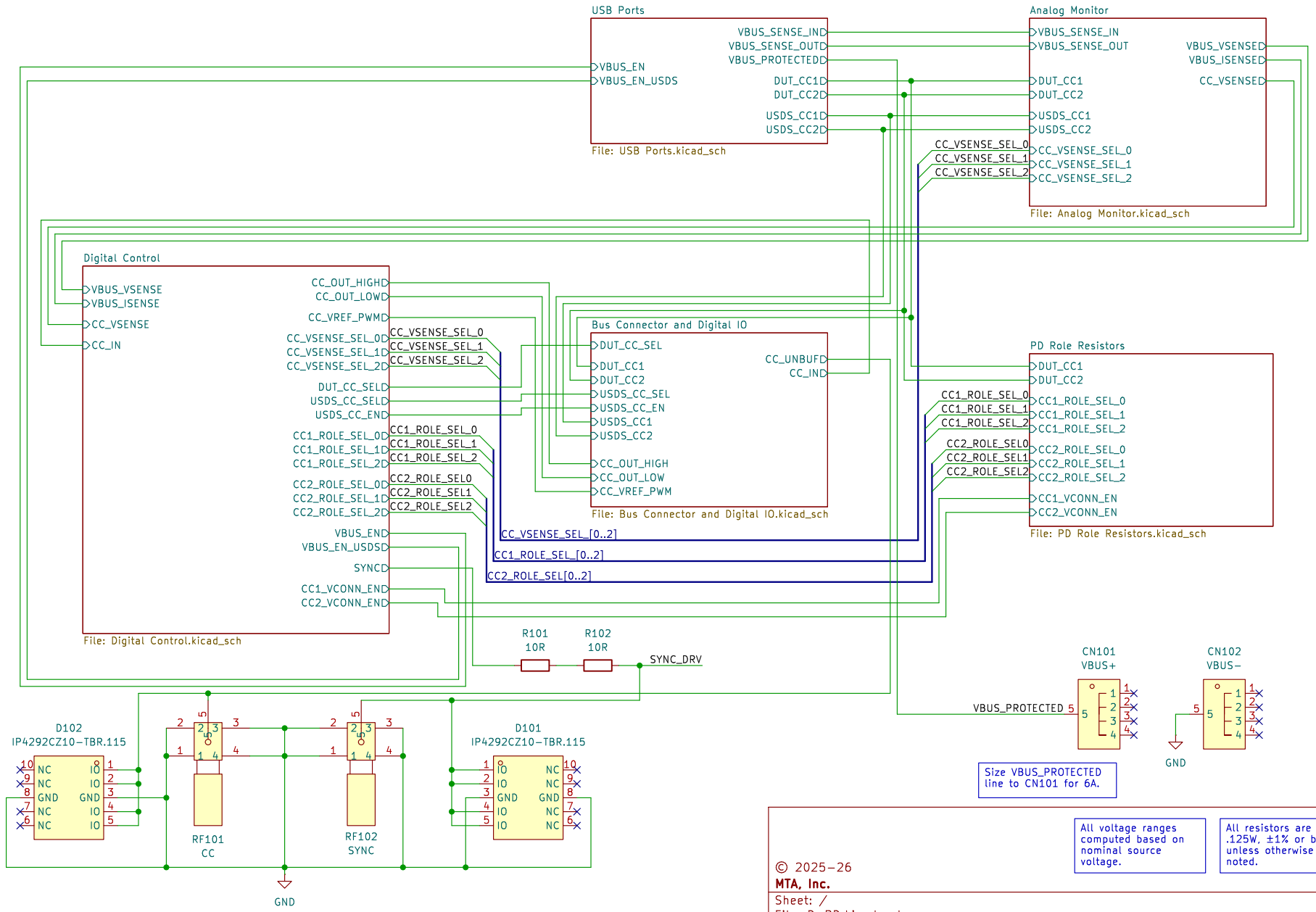

All voltage ranges computed based on nominal source voltage.

All resistors are 1206 .125W, ±1% or better unless otherwise noted.

© 2025−26
MTA, Inc.

Sheet: /
File: Dr.PD.kicad_sch

Title: Dr. PD

Size: A	Date: 2026−03−17	Rev: 2603−A
KiCad E.D.A. 9.0.6		Id: 1/6

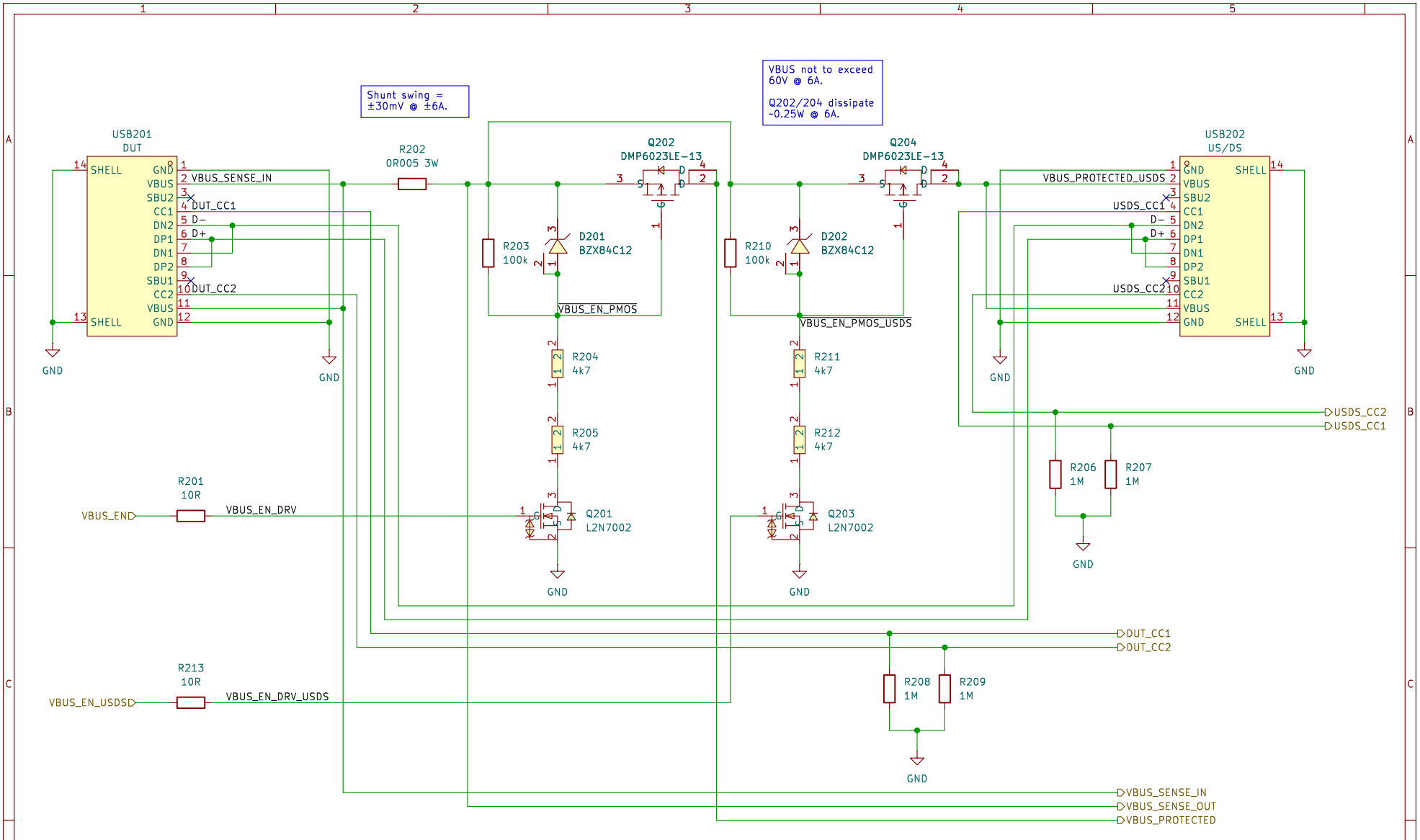

© 2025–26
MTA, Inc.

Sheet: /USB Ports/
File: USB Ports.kicad_sch

Title: USB Ports

Size: A	Date: 2026–03–17	Rev: 2603–A
KiCad E.D.A. 9.0.6		Id: 2/6

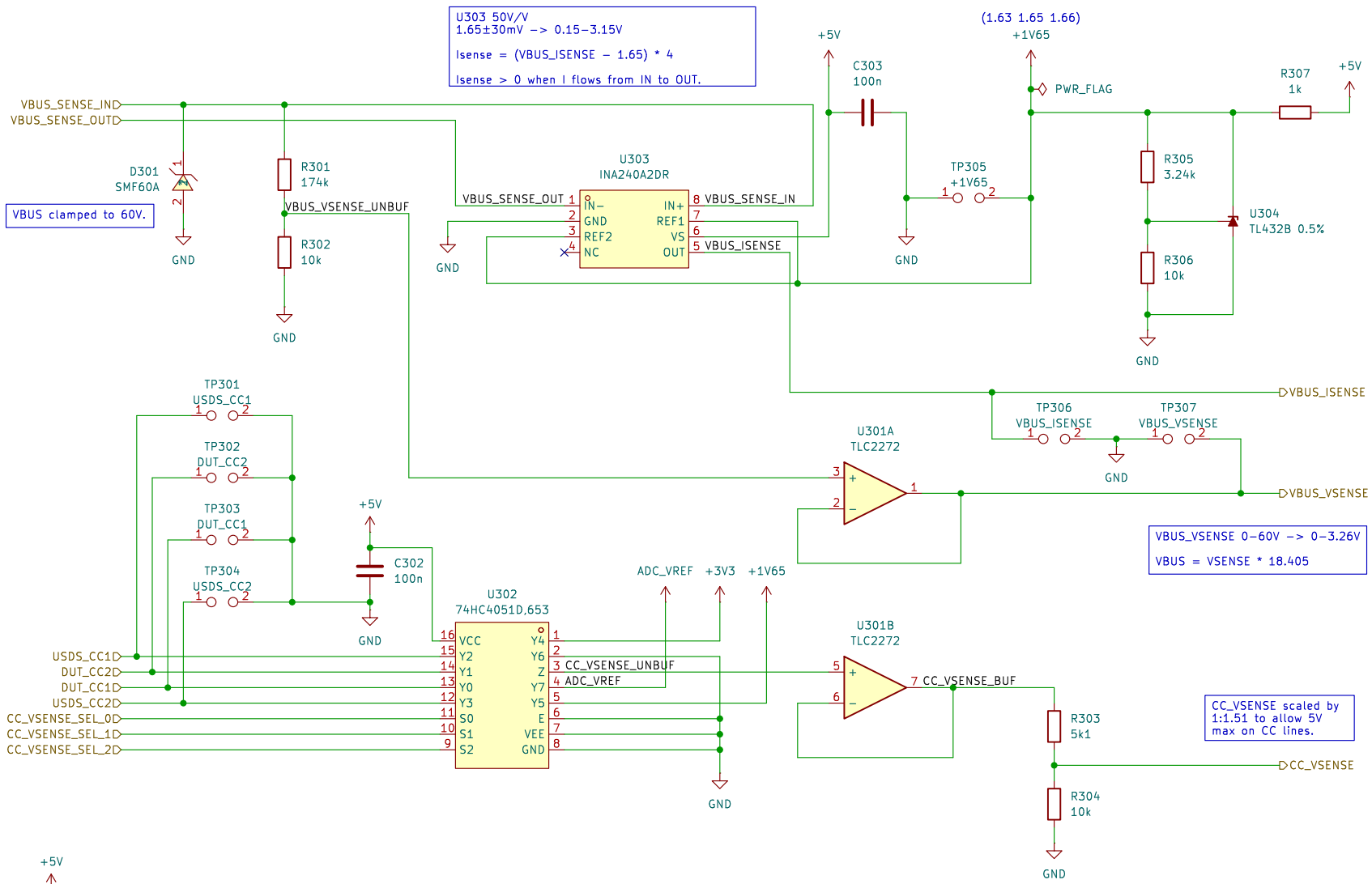

CC_VSENSE_SEL_0	CC_VSENSE_SEL_1	CC_VSENSE_SEL_2	SELECTION
0	0	0	DUT_CC1
1	0	0	DUT_CC2
0	1	0	USDS_CC1
1	1	0	USDS_CC2
0	0	1	+3V3
1	0	1	1.65V VREF
0	1	1	GND
1	1	1	3.3V ADC VREF

© 2025-26
MTA, Inc.

Sheet: /Analog Monitor/
File: Analog Monitor.kicad_sch

Title: Analog Monitor

Size: A	Date: 2026-03-17	Rev: 2603-A
KiCad E.D.A. 9.0.6		Id: 3/6

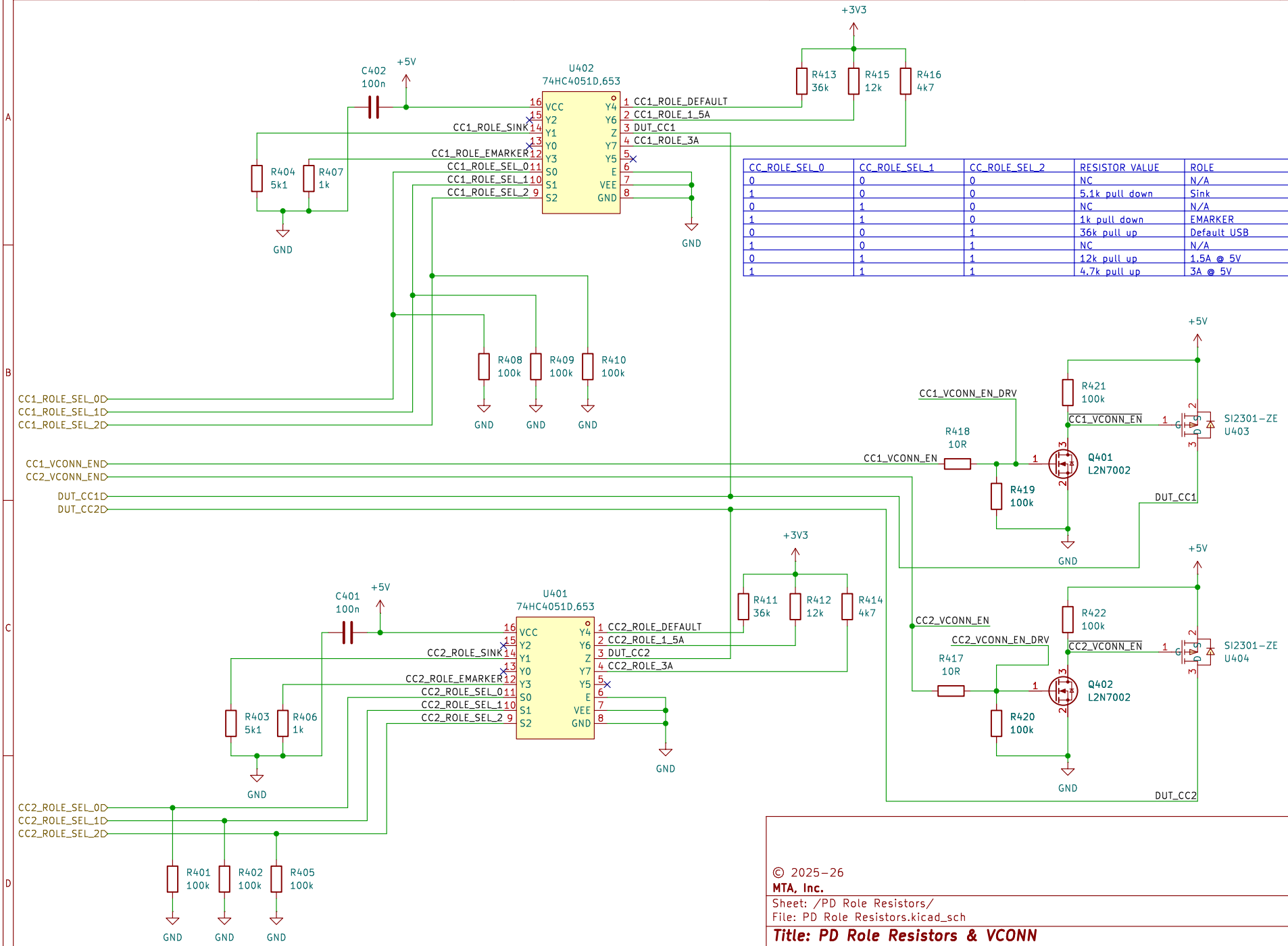

CC_ROLE_SEL_0	CC_ROLE_SEL_1	CC_ROLE_SEL_2	RESISTOR VALUE	ROLE
0	0	0	NC	N/A
1	0	0	5.1k pull down	Sink
0	1	0	NC	N/A
1	1	0	1k pull down	EMARKER
0	0	1	36k pull up	Default USB
1	0	1	NC	N/A
0	1	1	12k pull up	1.5A @ 5V
1	1	1	4.7k pull up	3A @ 5V

© 2025-26
MTA, Inc.

Sheet: /PD Role Resistors/
File: PD Role Resistors.kicad_sch

Title: PD Role Resistors & VCONN

Size: A	Date: 2026-03-17	Rev: 2603-A
KiCad E.D.A. 9.0.6		Id: 4/6

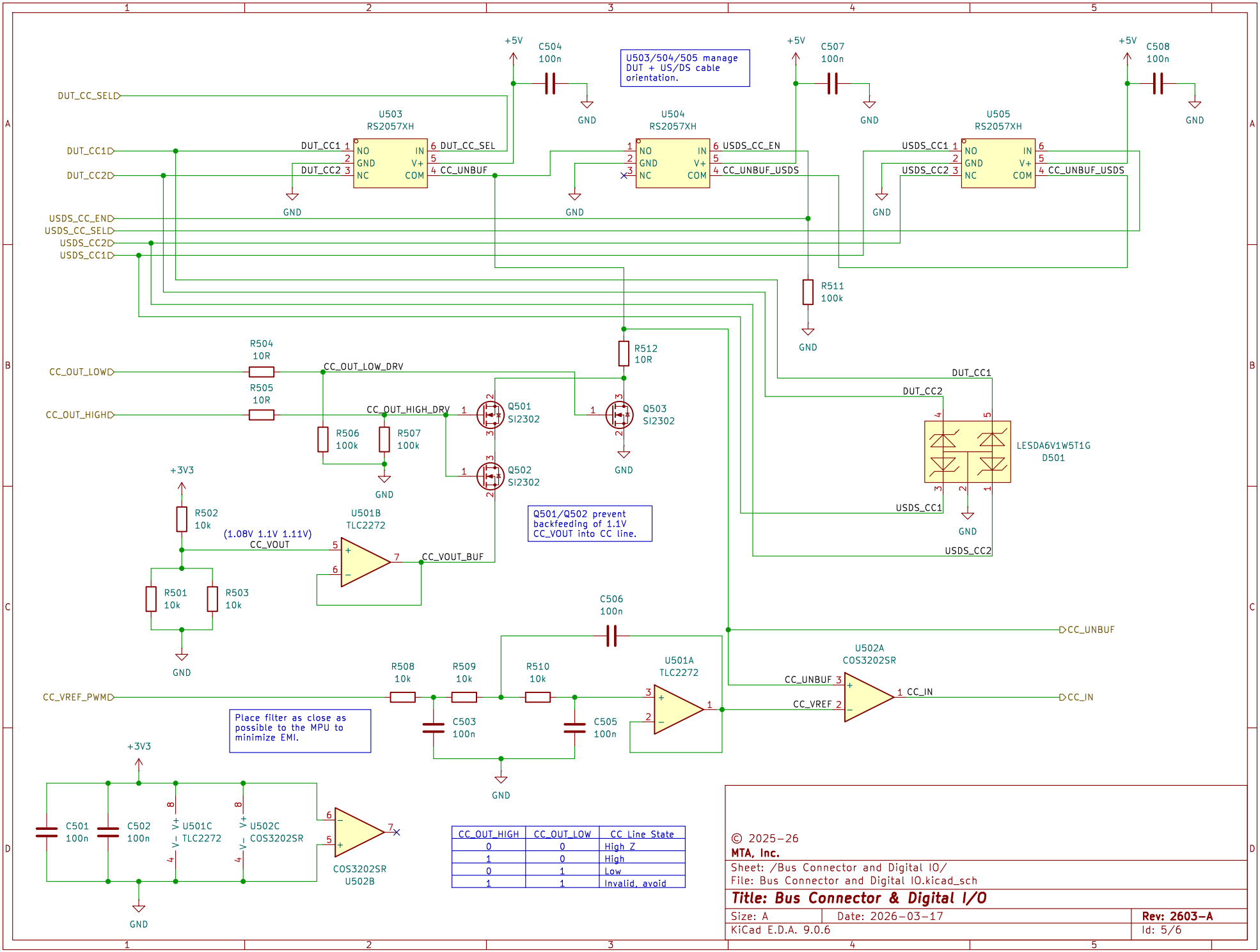

CC_OUT_HIGH	CC_OUT_LOW	CC Line State
0	0	High Z
1	0	High
0	1	Low
1	1	Invalid, avoid

© 2025–26
MTA, Inc.

Sheet: /Bus Connector and Digital IO/
File: Bus Connector and Digital IO.kicad_sch

Title: Bus Connector & Digital I/O

Size: A	Date: 2026–03–17	Rev: 2603–A
KiCad E.D.A. 9.0.6		Id: 5/6

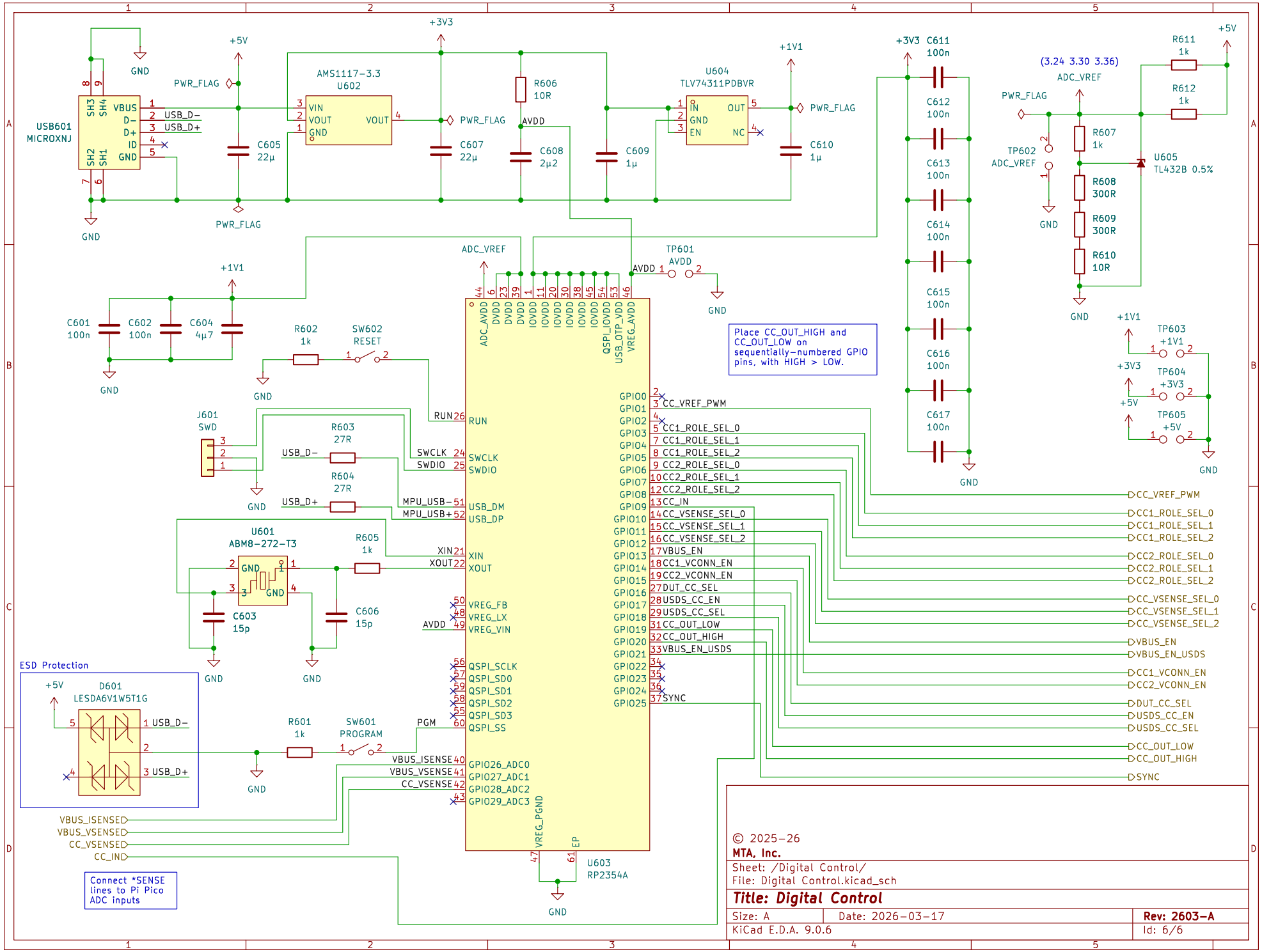
USB601
MICROXNJ
VBUS
D−
D+
ID
GND
USB_D−
USB_D+
PWR_FLAG
C605
22µ
AMS1117−3.3
U602
VIN
VOUT
GND
+3V3
C607
22µ
R606
10R
AVDD
C608
2µ2
C609
1µ
U604
TLV74311PDBVR
IN
OUT
EN
NC
+1V1
C610
1µ
C611
100n
C612
100n
C613
100n
C614
100n
C615
100n
C616
100n
C617
100n
(3.24 3.30 3.36)
ADC_VREF
R611
1k
R612
1k
+5V
R607
1k
R608
300R
R609
300R
R610
10R
U605
TL432B 0.5%
TP602
ADC_VREF
TP601
AVDD
C601
100n
C602
100n
C604
4µ7
R602
1k
SW602
RESET
J601
SWD
R603
27R
R604
27R
U601
ABM8−272−T3
R605
1k
C603
15p
C606
15p
ESD Protection
D601
LESDA6V1W5T1G
R601
1k
SW601
PROGRAM
PGM
U603
RP2354A
ADC_AVDD
DVDD
IOVDD
QSPI_IOVDD
USB_OTP_VDD
VREG_AVDD
RUN
SWCLK
SWDIO
USB_DM
USB_DP
XIN
XOUT
VREG_FB
VREG_LX
VREG_VIN
QSPI_SCLK
QSPI_SD0
QSPI_SD1
QSPI_SD2
QSPI_SD3
QSPI_SS
GPIO26_ADC0
GPIO27_ADC1
GPIO28_ADC2
GPIO29_ADC3
VREG_PGND
EP
MPU_USB−
MPU_USB+
VBUS_ISENSE
VBUS_VSENSE
CC_VSENSE
GPIO00 CC_VREF_PWM
GPIO01
GPIO02
GPIO03 CC1_ROLE_SEL_0
GPIO04 CC1_ROLE_SEL_1
GPIO05 CC1_ROLE_SEL_2
GPIO06 CC2_ROLE_SEL_0
GPIO07 CC2_ROLE_SEL_1
GPIO08 CC2_ROLE_SEL_2
GPIO09 CC_IN
GPIO10 CC_VSENSE_SEL_0
GPIO11 CC_VSENSE_SEL_1
GPIO12 CC_VSENSE_SEL_2
GPIO13 VBUS_EN
GPIO14 CC1_VCONN_EN
GPIO15 CC2_VCONN_EN
GPIO16 DUT_CC_SEL
GPIO17 USDS_CC_EN
GPIO18 USDS_CC_SEL
GPIO19 CC_OUT_LOW
GPIO20 CC_OUT_HIGH
GPIO21 VBUS_EN_USDS
GPIO22
GPIO23
GPIO24
GPIO25 SYNC
Place CC_OUT_HIGH and CC_OUT_LOW on sequentially−numbered GPIO pins, with HIGH > LOW.
TP603 +1V1
TP604 +3V3
TP605 +5V
VBUS_ISENSED
VBUS_VSENSED
CC_VSENSED
CC_IND
Connect *SENSE lines to Pi Pico ADC inputs
© 2025−26
MTA, Inc.
Sheet: /Digital Control/
File: Digital Control.kicad_sch
Title: Digital Control
Size: A
Date: 2026−03−17
Rev: 2603−A
KiCad E.D.A. 9.0.6
Id: 6/6