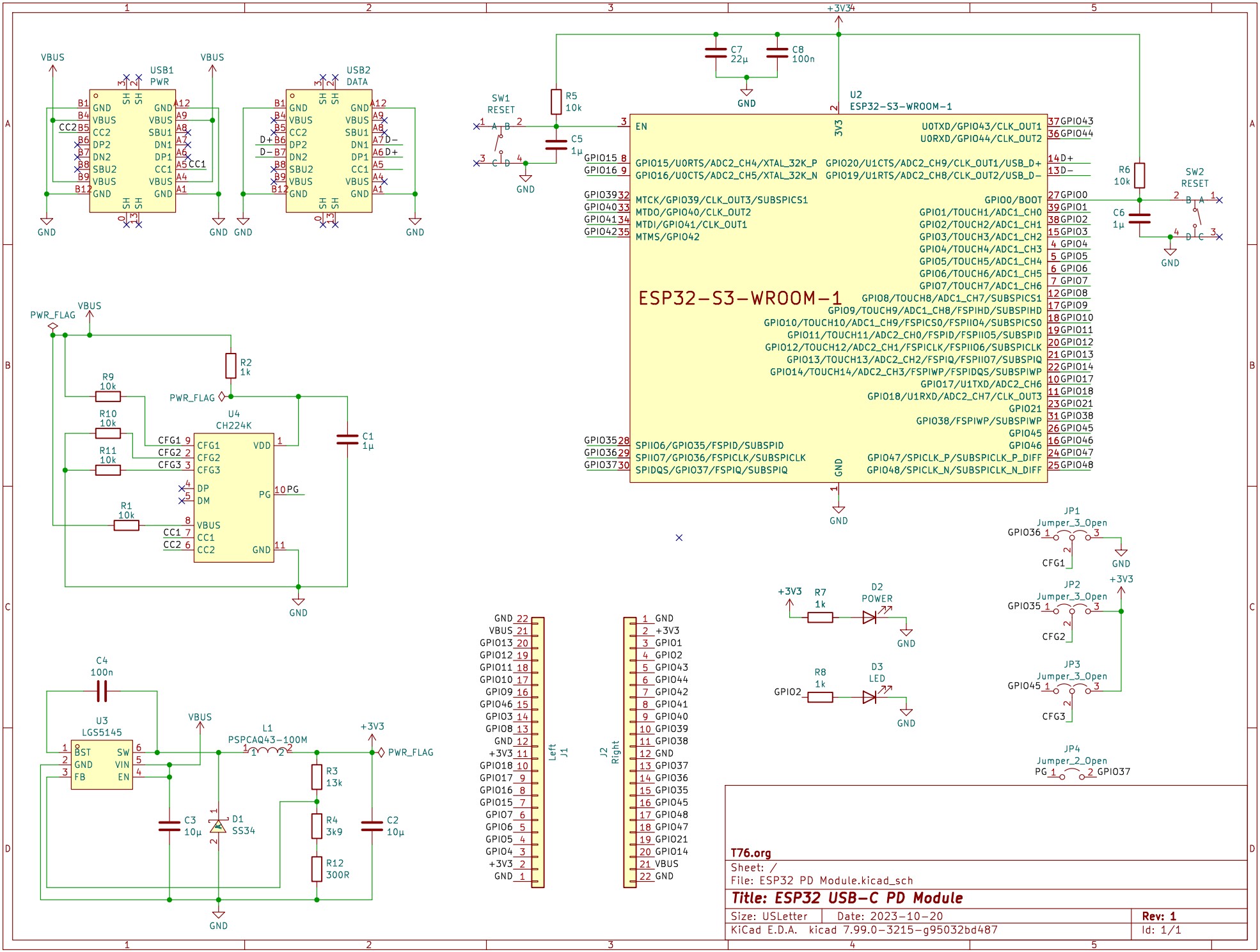

T76.org

Sheet: /

File: ESP32 PD Module.kicad_sch

Title: ESP32 USB-C PD Module

Size: USLetter	Date: 2023-10-20	Rev: 1
KiCad E.D.A. kicad 7.99.0-3215-g95032bd487		Id: 1/1