Rotary offset press WIFAG OF 370 S

WIFAG

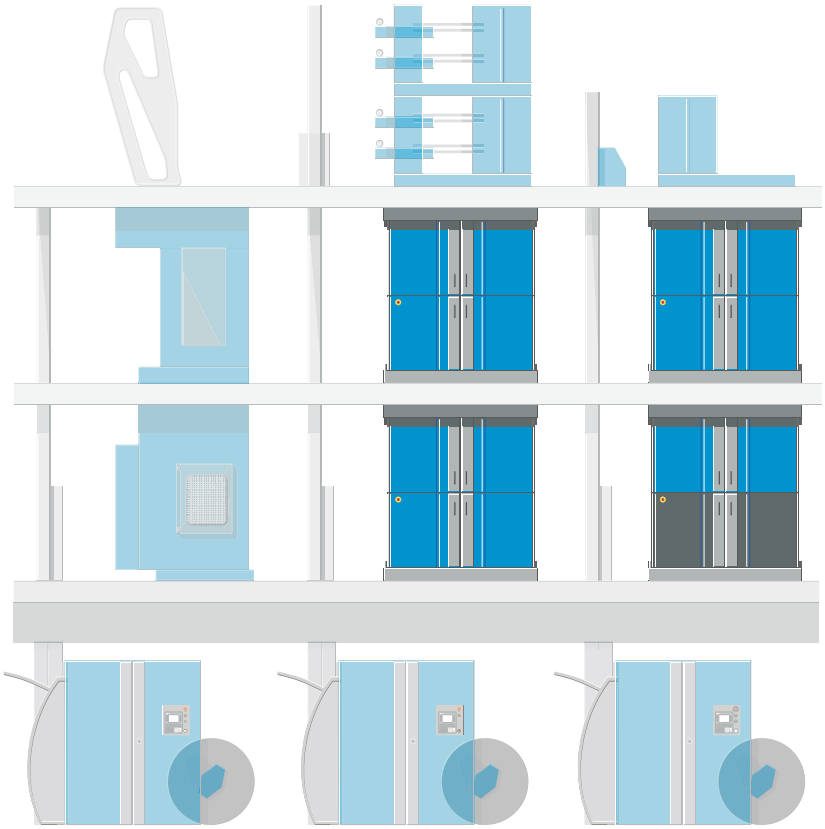

System

Folder

Angle bar module

Draw roller module

Printing unit

Autopaster

Suppliers documentation

Rotary offset press

Operating instructions

Printing unit

Machine type:	**WIFAG OF 370 S**	
Series:	**WIFAG OF 370 S**	
Project:	**Ananda**	
Project No.:	**WO-218**	
Document No.:	**D/WIFAG OF 370 S/218**	
Machine No.:	**2344-2346**	
Year of construction:	**2007**	
Edition 1*:	**03.07.09**	**(Subject to changes)**

*)This edition replaces all previously delivered versions of this operating instructions manual!

CE

WIFAG Maschinenfabrik AG
Wylerringstrasse 39
Postfach 8865
3001 Bern, Schweiz
Telefon:++ 41 (0) 31 / 339 33 33
Telefax:++ 41 (0) 31 / 339 36 65
http://www.wifag.com Mailto:info@wifag.ch

Subject to changes in the interest of technical progress.

Note protection mark ISO 16016:
"The reproduction, distribution and utilization of this document as well as the communication of its contents to others without explicid authorization is prohibited. Offenders will be held liable for the payment of damages. All rights reserved in the event of the grant of a patent, utility model or design."

Register in the Printing unit file

Introduction and product overview....1
Important for your safety 2
Control elements 3
operation 4
Lubrication 5
Maintenance 6
Electrical and control systems....7
Pneumatic system 8
ink supply 9
Ink fountain roller and ink pickup roller 10
Ink knife bar....11
Dampening unit....12
Printing couple drive 13
Oscillating drum and reciprocator drive 14
Rubber rollers 15
Plate cylinder 16
Blanket cylinder 17
Washing units 18
Web monitoring 19
Color register controller (optional) 20
Fan-out compensator (optional)....21

Contents Printing unit file

1 Introduction and product overview

1 Important Information 1.3
1.1 Qualification of the operating personnel and maintenance personnel 1.3
1.2 Production preparation and setup of the printing press 1.4
1.3 Printing press operation 1.6
1.4 Machine settings and read-back values 1.8
1.5 Delivery and placing of printing plates 1.9
1.6 Requirements for consumables 1.10
1.7 Supply systems and ambient conditions 1.10
1.8 Data interfaces to other computer systems 1.11
1.9 Image-data-based control functions 1.12
1.10 Direct imaging: Computer-to-Press 1.16
1.11 Wastage 1.17
1.12 Maintenance of the printing press 1.19
1.13 Spare parts 1.20
1.14 Guarantee 1.21

2 Operating instructions information 1.22

3 Overview of the system 1.22

4 Overview of printing unit 1.22
4.1 Position designations 1.23
4.2 Printing couples 1.24
4.3 Ink and dampening unit 1.25

2 Important for your safety

1 Basic information ... 2.3

2 Safety sectors ... 2.4

3 Working stations of danger zones ... 2.5
3.1 Overview ... 2.6
3.2 Cylinder and roller danger zones ... 2.7
3.3 Ink trough drive danger zones ... 2.9
3.4 Ink knife bar danger zones ... 2.10
3.5 Feed-in device danger zone ... 2.11
3.6 Web monitoring danger zones ... 2.12
3.7 Crane machine danger zone ... 2.13

4 Protective devices ... 2.14
4.1 Overview ... 2.14
4.2 Guards and covers ... 2.17
4.3 Operating mode switch ... 2.18
4.4 Working in the tunnel / mobile terminal ... 2.19
4.5 Manual drive ... 2.22

5 Safety switch of the power supply ... 2.23
5.1 Switching the power supply on and off ... 2.24

6 key-operated switch ... 2.27

7 Indicators and warning devices ... 2.28

8 Stop functions ... 2.30

3 Control elements

1 Overview ... 3.3

2 Control elements ... 3.4
2.1 Terminal panel ... 3.4
2.2 Printing couple control panel ... 3.5
2.3 Portable terminal ... 3.6
2.4 Sockets for portable terminal ... 3.8
2.5 Overview of pushbuttons and commands ... 3.9
2.6 Design and operation of the terminals ... 3.13
2.7 Terminal masks ... 3.21
2.8 Install terminal software ... 3.76

3 Indicators and warning devices ... 3.77

4 Malfunction indicators ... 3.79

4 operation

1 General safety information ... 4.3

2 Operating modes ... 4.4
2.1 Restrictions due to opened guards ... 4.4
2.2 Combined mode ... 4.5
2.3 Isolated mode ... 4.6
2.4 Makeready mode ... 4.7
2.5 Test mode ... 4.8

3 Allocation and de-allocate function groups ... 4.9

4 ink supply ... 4.10
4.1 Installing the portable ink fountain ... 4.10

5 Ink knife bar ... 4.12
5.1 Swing out ink knife bar ... 4.12
5.2 Insert ink separators ... 4.13

6 Plate cylinder ... 4.15
6.1 Manually insert and lift out printing plates ... 4.15
6.2 Printing with reduced web widths ... 4.17

5 Lubrication

1 Overview ... 5.3
1.1 Lubrication systems ... 5.4
1.2 General safety information ... 5.9
1.3 Lubricant properties ... 5.11
1.4 Lubricant overview ... 5.12
1.5 Special lubricants and preservatives ... 5.13

2 Construction and function ... 5.14
2.1 Oil circulation lubrication system ... 5.15
2.2 Bearer ring lubrication ... 5.17
2.3 Individual oil lubrication points ... 5.19
2.4 Centralized grease-lubrication system ... 5.20
2.5 Individual grease lubrication points ... 5.22
2.6 Lubricated for life lubrication points ... 5.22

3 Replace components ... 5.23
3.1 WIFAG article numbers ... 5.24
3.2 Oil circulation lubrication system ... 5.25
3.3 Bearer ring lubrication ... 5.28
3.4 Centralized grease-lubrication system ... 5.30

4 Basic settings ... 5.32
4.1 Setting ... 5.32

4.2 Calibration 5.32
4.3 Testing 5.33

5 Lubrication instructions 5.34
5.1 Oil circulation lubrication system 5.34
5.2 Bearer ring lubrication 5.35
5.3 Lubricate individual oil lubrication points 5.36
5.4 Centralized grease-lubrication system 5.37
5.5 Lubricate individual grease lubrication points 5.38

6 Maintenance

1 Information and regulations 6.3

2 Maintenance intervals 6.3

3 Maintenance schedules 6.4
3.1 Maintenance schedules of the entire installation 6.4
3.2 Daily maintenance schedule (after production / shift) 6.5
3.3 Weekly maintenance schedule 6.6
3.4 Monthly maintenance schedule 6.7
3.5 Biannual maintenance schedule 6.8
3.6 Annual maintenance schedule 6.9
3.7 Maintenance schedule at special intervals 6.10
3.8 Maintenance schedule for suppliers' components 6.11

4 Maintenance activities 6.12
4.1 Clean blanket cylinder 6.14
4.2 Clean rubber rollers, oscillating drum, ink pickup roller 6.16
4.3 Check / clean portable ink fountain and ink level sensors 6.17
4.4 Clean doctor blade on the roller washing device 6.20
4.5 Clean and conserve plate cylinder 6.22
4.6 Dry clean reflected light sensors 6.24
4.7 Inspecting / cleaning the fan-out roller 6.25
4.8 Shut off the dampening solution supply 6.27
4.9 Remove ink and paper dust 6.28
4.10 Clean roller washing device 6.29
4.11 Clean reflected light sensor with optical cleaner 6.31
4.12 Clean ink fountain roller, ink knife, ink separators 6.33
4.13 Regenerate rubber rollers 6.38
4.14 Re-clean oscillating drums 6.39
4.15 Adjust sidelay register 6.40
4.16 Adjust the fan-out compensator 6.41
4.17 Clean line system of the dampening solution supply 6.42
4.18 Clean ink pickup roller and stops 6.43
4.19 Check pneumatic system 6.45

4.20 Check bearing of printing couple drive 6.46
4.21 Setting timing belt tensions 6.47
4.22 Conserve inner sides of wall 6.52
4.23 Clean plate tensioning device 6.54
4.24 Clean stops of ink knife bar throwon 6.56
4.25 Clean measuring head of color register controller 6.58
4.26 Check / replenish aerosol cleaning agent tank 6.60
4.27 Check / replenish pump stand 6.61
4.28 Check oscillating drums 6.64
4.29 Check bearer rings 6.65
4.30 Check rubber rollers 6.67
4.31 Checking the ink valves 6.68
4.32 Maintenance activities on ink pumps / ink filter 6.69
4.33 Maintenance activities on spray dampening systems 6.70
4.34 Maintenance activities on dampening solution devices 6.72
4.35 Maintenance activities on cylinder washing systems 6.73
4.36 Maintenance activities on pump stands 6.74

7 Electrical and control systems

1 Overview 7.3

2 Construction and function 7.4
2.1 Power supply 7.5
2.2 Bus systems 7.8
2.3 Special electrical components 7.10

3 Replace components 7.12

4 Basic settings 7.13

5 Commissioning 7.14

8 Pneumatic system

1 Overview ... 8.3
1.1 System ... 8.3
1.2 printing unit ... 8.4
1.3 Pneumatic system schematics ... 8.5

2 Design and function ... 8.7
2.1 Main air pressure-regulator ... 8.7
2.2 Pressure switch ... 8.7
2.3 Filter-regulator-lubricator unit ... 8.7
2.4 Pneumatic components on subfunction groups ... 8.8
2.5 Valve bank ... 8.9

3 Replace components ... 8.10
3.1 WIFAG article numbers ... 8.10
3.2 Replace standard components ... 8.11
3.3 Replace special components ... 8.11

4 Basic settings ... 8.12
4.1 Setting ... 8.12
4.2 Calibration ... 8.13
4.3 Testing ... 8.13

9 ink supply

1 Overview ... 9.3
1.1 Subassemblies ... 9.3
1.2 Customer-specific color imposition ... 9.4

2 Construction and function ... 9.5
2.1 Main supply system ... 9.6
2.2 Ink level control and ink valve block ... 9.7
2.3 Portable ink fountain ... 9.9

3 Replace components ... 9.10
3.1 WIFAG article numbers ... 9.10
3.2 Replacing the ink level sensor ... 9.11
3.3 Replacing components of the ink level control ... 9.13
3.4 Replacing valve cartridge on the ink valve ... 9.16
3.5 Replace components of the ink pump ... 9.18

4 Basic settings ... 9.19
4.1 Setting ... 9.19
4.2 Calibration ... 9.19
4.3 Testing ... 9.20

10 Ink fountain roller and ink pickup roller

1 Overview 10.3

2 Construction and function 10.4
2.1 Ink fountain roller 10.5
2.2 Drive control 10.6
2.3 Ink pickup roller 10.7

3 Replace components 10.8
3.1 WIFAG article numbers 10.8
3.2 Replacing the ink fountain roller drive and coupling 10.9
3.3 Replace drive controller 10.12
3.4 Replace pneumatic cylinder 10.12

4 Basic settings 10.12
4.1 Setting 10.13
4.2 Calibration 10.16
4.3 Testing 10.17

11 Ink knife bar

1 Overview 11.3

2 Design and function 11.4
2.1 Ink knife bar throwon 11.4
2.2 Ink key and ink knife 11.6
2.3 Ink key control 11.8
2.4 Ink separator 11.14

3 Replace components 11.15
3.1 WIFAG article numbers 11.16
3.2 Replacing the motor unit 11.17
3.3 Replace the ink knife 11.21
3.4 Replace pneumatic cylinder 11.26
3.5 Replacing the magnetic field sensor 11.26
3.6 Replacing the ink separators 11.26
3.7 Replacing components of the ink key control 11.27

4 Basic settings 11.30
4.1 Setting 11.31
4.2 Calibration 11.44
4.3 Testing 11.46

12 Dampening unit

1 Overview ... 12.3

2 Construction and function ... 12.4
2.1 Dampener unit ... 12.4
2.2 Dampening solution ... 12.4
2.3 Spray dampening system ... 12.5
2.4 Spray dampening system control ... 12.5
2.5 Dampening solution supply ... 12.6

3 Replace components ... 12.8
3.1 WIFAG article numbers ... 12.8
3.2 Replacing the spray dampening system ... 12.9
3.3 Replacing the spray dampening system control ... 12.12
3.4 Replace components of the spray dampening system ... 12.14

4 Basic settings ... 12.16
4.1 Setting ... 12.17
4.2 Calibration ... 12.21
4.3 Testing ... 12.21

13 Printing couple drive

1 Overview ... 13.3

2 Construction and function ... 13.4
2.1 Printing couple drive ... 13.5
2.2 Cooling ... 13.7
2.3 Manual drive ... 13.8
2.4 Drive control ... 13.9

3 Replace components ... 13.11
3.1 WIFAG article numbers ... 13.11
3.2 Replacing the printing couple drive ... 13.12
3.3 Replacing the timing belt ... 13.17
3.4 Replace resolver ... 13.18
3.5 Replace drive controller ... 13.20

4 Basic settings ... 13.21
4.1 Setting ... 13.21
4.2 Calibration ... 13.22
4.3 Testing ... 13.26

14 Oscillating drum and reciprocator drive

1 Overview 14.3

2 Construction and function 14.4
2.1 Oscillating drum 14.5
2.2 Oscillating drum cooling 14.6
2.3 Reciprocator drive 14.8
2.4 Inking unit clutch 14.9

3 Replace components 14.10
3.1 WIFAG article numbers 14.10
3.2 Replacing the rotary connector 14.11

4 Basic settings 14.14
4.1 Setting 14.14
4.2 Calibration 14.14
4.3 Testing 14.14

15 Rubber rollers

1 Overview 15.3

2 Construction and function 15.4
2.1 Cylinder form of the rubber rollers 15.5
2.2 Designation of the rubber rollers 15.6
2.3 Technical data of the rubber rollers 15.7
2.4 Designation of the bearing covers and bearing shells 15.8
2.5 Floating and fixed bearings 15.9
2.6 Mechanical NC roller bearing 15.10
2.7 Pneumatic roller bearing 15.12
2.8 Roller positions and setting values (Nip) 15.13

3 Replace components 15.15
3.1 WIFAG article numbers 15.16
3.2 Replace rubber roller (remove/install) 15.17
3.3 Replace mechanical NC roller bearing 15.21
3.4 Replace pneumatic roller bearing 15.23

4 Basic settings 15.25
4.1 Setting 15.26
4.2 Calibration 15.44
4.3 Testing 15.44

16 Plate cylinder

1 Overview ... 16.3

2 Construction and function ... 16.5
2.1 Plate tensioning device ... 16.6
2.2 Sidelay register adjustment ... 16.7
2.3 Sidelay register control ... 16.8
2.4 Adjusting the circumferential register ... 16.9

3 Replace components ... 16.10
3.1 WIFAG article numbers ... 16.11
3.2 Replacing the sidelay register drive ... 16.12
3.3 Replacing leaf spring ... 16.15

4 Basic settings ... 16.18
4.1 Setting ... 16.19
4.2 Calibration ... 16.31
4.3 Testing ... 16.31

17 Blanket cylinder

1 Overview ... 17.3

2 Construction and function ... 17.5
2.1 Rubber blanket tensioning device ... 17.6
2.2 Useable blankets ... 17.7
2.3 Oversize blankets and printing plates ... 17.7
2.4 printing throwon ... 17.9

3 Replacing components ... 17.11
3.1 WIFAG article numbers ... 17.12
3.2 Replace rubber blankets / rubber blanket underlays ... 17.13
3.3 Replacing tightening screw ... 17.23

4 Basic settings ... 17.26
4.1 Setting ... 17.26
4.2 Calibration ... 17.26
4.3 Testing ... 17.26

18 Washing units

1 Overview ... 18.3

2 Construction and function ... 18.4
2.1 Ink fountain roller washing unit ... 18.4
2.2 Roller washing device ... 18.5
2.3 Spray device cleaning agent (optional) ... 18.6
2.4 Cylinder washing unit (optional) ... 18.8

3 Replace components ... 18.9
3.1 WIFAG article numbers ... 18.9
3.2 Replacing doctor blade on the ink fountain roller washing unit ... 18.10
3.3 Replacing doctor blade on the roller washing device ... 18.11
3.4 Replace the filter cartridge of the pump group ... 18.12
3.5 Replacing the solenoid valve on the spray device ... 18.14
3.6 Replacing components of the cylinder washing unit ... 18.16

4 Basic settings ... 18.17
4.1 Setting ... 18.18
4.2 Calibration ... 18.20
4.3 Testing ... 18.20

19 Web monitoring

1 Overview ... 19.3

2 Construction and function ... 19.4
2.1 web-break switch ... 19.4
2.2 Web severer ... 19.6
2.3 Anti-reversing device ... 19.7
2.4 Carrier roller brake ... 19.9

3 Replace components ... 19.10
3.1 WIFAG article numbers ... 19.10
3.2 Replacing the reflected light sensor of web break detector ... 19.11
3.3 Replacing the web severer blade for the web severer ... 19.13
3.4 Replace components of the anti-reversing device ... 19.15
3.5 Replacing the brake segment for the carrier roller brake ... 19.20
3.6 Replace pneumatic cylinder ... 19.21

4 Basic settings ... 19.22
4.1 Setting ... 19.23
4.2 Calibration ... 19.25
4.3 Testing ... 19.25

20 Color register controller (optional)

1 Overview ... 20.3

2 Construction and function ... 20.4
2.1 Register mark fields ... 20.4
2.2 Regulation process ... 20.7
2.3 Control system ... 20.11
2.4 Measuring module ... 20.13
2.5 Linear unit ... 20.15

3 Replace components ... 20.16
3.1 WIFAG article numbers ... 20.16
3.2 Replace flash lamp ... 20.17
3.3 Replace supply unit ... 20.22
3.4 Replace linear unit ... 20.27
3.5 Replace SYMAC processor ... 20.30

4 Basic settings ... 20.31
4.1 Setting ... 20.31
4.2 Calibration ... 20.31
4.3 Testing ... 20.31

5 Troubleshooting ... 20.32
5.1 Malfunction indicators ... 20.32
5.2 Malfunctions and troubleshooting ... 20.32

21 Fan-out compensator (optional)

1 Overview ... 21.3

2 Construction and function ... 21.4
2.1 Principle of operation of the fan-out compensator ... 21.5
2.2 Fan-out roller ... 21.6
2.3 Adjustment drive ... 21.7

3 Replace components ... 21.8
3.1 WIFAG article numbers ... 21.8
3.2 Replacing the fan-out compensator ... 21.9
3.3 Replace servo drive ... 21.11

4 Basic settings ... 21.13
4.1 Setting ... 21.14
4.2 Calibration ... 21.17
4.3 Testing ... 21.17

1 Introduction and product overview

1 Important Information ... 1.3
1.1 Qualification of the operating personnel and maintenance personnel ... 1.3
1.2 Production preparation and setup of the printing press ... 1.4
1.3 Printing press operation ... 1.6
1.4 Machine settings and read-back values ... 1.8
1.5 Delivery and placing of printing plates ... 1.9
1.6 Requirements for consumables ... 1.10
1.7 Supply systems and ambient conditions ... 1.10
1.8 Data interfaces to other computer systems ... 1.11
1.9 Image-data-based control functions ... 1.12
1.9.1 Cutting position control ... 1.13
1.9.2 Circumferential register control ... 1.14
1.9.3 Ink thickness control ... 1.14
1.10 Direct imaging: Computer-to-Press ... 1.16
1.11 Wastage ... 1.17
1.12 Maintenance of the printing press ... 1.19
1.13 Spare parts ... 1.20
1.14 Guarantee ... 1.21

2 Operating instructions information ... 1.22

3 Overview of the system ... 1.22

4 Overview of printing unit ... 1.22
4.1 Position designations ... 1.23
4.2 Printing couples ... 1.24
4.3 Ink and dampening unit ... 1.25

1 Important Information

The operating instructions contain important instructions about the maintenance and operation of a WIFAG printing press. Compliance with these instructions is essential if the WIFAG newspaper printing press is to achieve the specified production output and print quality.

Failure to observe the instructions on maintenance and operation of the printing press means that there can be no guarantee that the printing press will achieve the specified performance values with regard to availability, production output, print quality and the amount of wastage that occurs during production. Failure to observe these instructions also means that WIFAG cannot guarantee that the values specified for the printing press with regards to availability, production outputs, print quality and wastage are achieved.

1.1 Qualification of the operating personnel and maintenance personnel

A modern newspaper printing press is an industrial production plant that comprises a multitude of complex technical systems and functions such as mechanical devices, electronic and software-based automation functions and printing procedures.

Large industrial production machines such as a newspaper printing press require qualified technical personnel to maintain and operate the machine in production operation.

WIFAG newspaper printing presses are equipped with electronic machine control systems and with automatic regulation; they are largely automated. This means they require relatively few operating personnel. By the same token the requirements on the maintenance and operating personnel in terms of technical qualifications are relatively high.

Maintaining and running the printing press in production requires the assignment of trained personnel who are sufficiently qualified for their respective tasks. The technical qualification requirements expected of the personnel for the maintenance work and for running the printing press in production are specified in the operating instructions.

To understand the particularities of WIFAG newspaper printing presses and be able to perform the specific maintenance work and operation of the press in production, the personnel concerned must attend and successfully complete all the relevant courses provided by WIFAG and the automation system suppliers (central control console, production management computer, etc.).
Every course participant who has successfully participated in WIFAG training courses and training courses given by automation system suppliers (central control console, production management computer, etc.) receives a certificate confirming course completion.

To ensure that the knowledge and skills acquired at these courses are not forgotten, it is imperative that all personnel assigned to maintenance work and to operating the press in production regularly attend refresher courses.

1.2 Production preparation and setup of the printing press

The production preparation and setup of the printing press in production requires the assignment of trained personnel who are sufficiently qualified for this task.

To understand the particularities of WIFAG newspaper printing presses and be able to perform the specific production preparation and makeready work on the printing press, the concerned personnel must attend and successfully complete the relevant WIFAG training courses and those of the automation system suppliers (central control console, production management computer, etc.).

The technical production planning and production preparation for the printing press are done primarily with the production management computer system and the control console system. The functions of the production management computer system and the control console system are described in the corresponding manuals. These manuals are part of the operating instructions

The effectiveness of the printing press in operation can be greatly influenced by production planning – with positive and negative repercussions.

A particular newspaper edition with a particular stitching structure and color imposition can be printed with the printing press in many different ways, i.e. with different web paths through the press, different imposition schemes, different color impositions of the printing couples, different plate allocations on the impression cylinders of the printing couples, etc.

For instance it usually makes sense to produce a particular newspaper edition with as few webs as possible and as wide as possible, e.g. with ABCD full width. It is usually less economical to use more webs of a lesser width, e.g. with BC half width. Using fewer webs means having to feed fewer webs into the machine. This cuts down on the work needed to set up the press for a new production run. The number of paper rolls used and the number of roll changes can also be reduced as a result.

The effectiveness of the printing press in operation depends greatly on the selected web paths through the press, the color allocation to the printing couples, the turning operations on the angle bars, the web paths over formers and through the folder.

Using the simplest possible web path routes through the press – with short web paths, simple turning operations and simple web paths through the folder tower – greatly contributes towards reducing the amount of work needed to set up the press, towards reliable production runs and a high production output of the press.

Resetting operations between successive production runs, e.g. feeding in new webs, washing blanket cylinders, re-hanging printing plates, can be reduced if the paper guides, imposition schemes and occupations used in successive production runs are coordinated.

- If the web paths used in successive production runs are identical, the corresponding webs do not have to be fed in from scratch between production runs.
- If the plate allocations on the impression cylinders of the printing couples remain the same in successive production runs, for instance when printing newspaper editions with largely the same content, only a few printing plates need to be repositioned.

WIFAG wishes to point out that the production output of the printing press, the work needed to set up the press for a new production run and the work needed to reset the printing press between successive production runs are all significantly influenced by the technical production planning and production preparations. Setting up optimal production performance of the printing press and the optimal printing results require appropriate technical production planning and production preparation.

Before a production run can begin, the printing press has to be set up accordingly. The appropriate production data has to be loaded on the control console system. Among other things, the correct width webs have to be fed through the machine using the correct web paths. The printing plates have to be placed properly onto the impression cylinders in the correct positions.

WIFAG assumes no liability for the consequences of faulty production planning or faulty printing press makeready tasks. WIFAG assumes no liability for insufficient performance of the printing press, unsatisfactory printing quality, or excessively high wastage due to errors in production preparation or improper makeready of the printing press.

1.3 Printing press operation

The operation of the printing press in production requires trained personnel who are adequately qualified for this task.

To understand the particularities of WIFAG newspaper printing presses and to be able to perform the specific work necessary for operation of the press in production, the personnel concerned must attend and successfully complete all the relevant courses provided by WIFAG and the automation system suppliers (central control console, production management computer, etc.).

The printers essentially operate the machine from the control consoles. The functions of the central control consoles are described in the relevant manuals. These manuals are part of the operating instructions.

Local commands to operate the printing press can be given via the control panels (displays) installed directly on the press. The functions of the local operating panels of the autopasters, printing couples, angle-bar modules and folder are described in the operating instructions.

The newspaper printing press must be operated and set correctly if it is to provide its full production output and print quality. The following adjustments are particularly important in the production mode of the printing press:

- A prerequisite for stable web conveyance through the printing press is that the set web tension values are correct for the infeed units, the lead values are correct for the draw rollers, and the draw rollers are correctly set. The web tensions for the individual webs can be specified for the corresponding infeed units from the control console. The lead values for the draw rollers can also be specified from the control console.
  If the web tensions and leads are not properly set, reliable web conveyance through the printing press cannot be guaranteed. If the settings are not right, web breaks and other problems may result.

- If the individual newspaper pages are to have a correct white margin around the print image, the corresponding ribbons must be cut through in the right places on the cutting cylinder in the folder. Setting the cutting position ensures that, for instance in broadsheet format, the lower and upper white margin of the newspaper pages are the right height. Cutting position errors can also be due to incorrectly set web tensions and leads.
- If automatic cutting position control is active, it can – within certain limits – automatically correct any cutting position errors that occur.
- If a good print quality is to be achieved in multi-color printing, the print images for the individual printing inks, e.g. Cyan, Magenta, Yellow, Black, must be appropriately printed on top of one another. This requires the corresponding sidelay registers and circumferential registers to be set correctly. Sidelay registers and circumferential registers can be set from the control console. If the sidelay registers or circumferential registers are incorrectly set, the print images will be faulty.
- Color register errors can be caused by flaws in the making of the printing plates or by incorrectly set web tensions. If a circumferential register control is active, it can – within certain limits – automatically correct any circumferential register errors that occur.
- In newspaper printing with a web-feed printing press using the offset printing method, ink and water are applied to the paper web during the printing process. To obtain a satisfactory print image, it is important to carry out the correct settings for both water and ink. The thickness of the ink layer for the individual printing inks, e.g. Cyan, Magenta, Yellow, Black, can be adjusted from the control console in individual ink zones using the corresponding ink keys. The amount of water can be adjusted from the control console using the corresponding dampening unit, for example for half the width of a broadsheet page.
- If too little water is fed to a printing plate surface, a phenomenon known as “scumming” can occur in extreme cases. And if too much water is fed to a printing plate surface a phenomenon known as emulsifying can occur in extreme cases. In both cases the print results are absolutely flawed. If automatic ink thickness regulation is active, it can automatically correct (within certain limits) deviations in the thickness of the individually applied ink layers on the paper webs (corresponding to appropriate full-tone density).

WIFAG cannot assume any responsibility for the consequences of incorrect operation or inadequate setting of the printing press. WIFAG assumes no liability for unavailability of the printing press, insufficient production performance, unsatisfactory printing quality, or excessively high wastage due to operating errors or incorrect settings.

1.4 Machine settings and read-back values

Before an individual production run can begin, the printing press is preset using the automation system so that on startup marketable newspaper copies can quickly be printed and the startup wastage remains low. It is not possible to keep startup wastage low without good values for presettings.

The presettings of the printing press and the recorded read-back values in production mode require trained personnel who are sufficiently qualified for this work.

To understand the particularities of WIFAG newspaper printing presses and to be able to perform the specific functions for presetting the machine and for detecting read-back values, it is imperative that the relevant personnel attend and successfully complete the corresponding courses provided by WIFAG and the automation system suppliers (central control console, production management computer, etc.).

The presettings of the printing press are performed using the production management computer and the control console system. The functions of the production management computer system and the control console system are described in the corresponding manuals. These manuals are part of the operating instructions.

The presettings of the web tensions (autopaster and infeed units), the leads of draw rollers, the cutting positions of the individual ribbons (ribbon registers), and the color registers (circumference register, sidelay register) are done primarily with read-back values that were saved during an earlier, similar production run.

Poor presettings are often the result of read-back errors (noting) in an earlier production run or of inadequate consideration of the machine configurations, paper guides and materials (e.g. the paper types) used in the current production run. If varying materials with vastly different properties (e.g. different paper types or different ink types) are used, they need to be taken into consideration during production planning and in the machine settings.

The zone-wide ink keys and the half-page-wide dampening units are preset depending on the production speed and the surface coverage of the printing plates concerned. The faster the press is running, the more ink and dampening solution per time unit is required for printing.

The surface coverage of the printing plates is determined in the makeready phase by software-implemented scanning of the digital plate contents (Softscan function) or by optical scanning of the printing plates (plate scanner). It is not possible to preset the ink keys and dampening units of the printing press properly without complete and correct surface coverage values for the individual production runs.

The functions for presetting the printing press for the various production runs and the systematic procedure for saving (tracking) the read-back values are explained and practiced in the WIFAG training courses for printers and in those of the automation system suppliers (control consoles, production management computer, etc.). The same applies for the automatic presetting of the ink/water metering according to production speed and surface coverage values for the individual ink zones of the printing plates.

WIFAG cannot assume any responsibility for high startup waste or poor print quality during startup caused by inadequate preset values if the incorrect preset values are caused by operating errors, e.g. during read-back, by inadequate consideration of material properties or by a lack of surface coverage values.

1.5 Delivery and placing of printing plates

In order to operate the printing press correctly, before beginning production runs it is necessary to place the imaged printing plates on the correct plate cylinder positions.

For this the printing plates that were correctly imaged in the make-ready stage must be delivered to the printing press. If the printing plates are to be properly placed onto the plate cylinders of the printing press, they need to be correctly edged and punched. To ensure that the printing plates are correctly positioned on the plate cylinders, it is necessary to ensure that the printing plates are correctly identified (designated) and are sorted into a logical sequence when delivered to the printing press.

WIFAG cannot assume any responsibility for waiting times during production, disruptions in production, poor print quality or other defects in the printed newspaper copies that are due to damaged or incorrectly made printing plates or to incorrectly plate printing plates.

1.6 Requirements for consumables

The printing press can only reliably provide the specified production outputs if the consumables used for newspaper printing are suitable and comply with WIFAG specifications. This applies in particular to:

- Rubber blankets
- Paper
- Printing inks
- Dampening solution and dampener additives
- Printing plates
- Cleaning agent

The use of unsuitable materials can affect the production output and the print quality. Unsuitable materials can also cause malfunctions in the operation of the printing press or even cause damage to the press.

WIFAG strongly recommends that you clarify the use of any unusual or new consumables with WIFAG beforehand.

WIFAG assumes no liability for production performance problems or printing quality problems or malfunctions or damage to the printing press caused by using inappropriate consumables.

1.7 Supply systems and ambient conditions

The printing press functions reliably only if the external supply systems connected to the press satisfy the specifications and function dependably.

This applies in particular to the electrical supply system. The electrical mains supply must comply with specifications (voltage, frequency) and provide electrical power continuously and reliably. Interruptions, overvoltage (e.g. lightening) and irregular fluctuations in the electrical energy supply may cause serious operational malfunctions of the printing press.

Certain computers of the automation system of the printing press are connected to an uninterruptible power supply (emergency power system) that provides these computers with energy in the event of an electrical power failure of the power supply network in an emergency for a limited time with electrical energy from batteries. This ensures that certain basic functions of the machine control system, of the central control consoles, and of the production computers of the printing press are maintained for a limited time if there is an electrical failure. If the batteries do not function or are not charged, the uninterruptible power supply cannot provide electrical energy in the event of a power network failure.

The printing press requires a supply of cooling water, particularly for cooling the electric motors and drive electronics. The supply of cooling water must comply with specifications (temperature, water quantity) and operate continuously and reliably. The printing press cannot be operated without a sufficient supply of cooling water at the appropriate temperature.

The ambient conditions in the printing shop in which the press is set up must be suitable for operating a newspaper printing press. This applies in particular to the room temperature and relative humidity, adequate ventilation, and dust-free conditions.

The level of electromagnetic interference from external causes in the printing shop must not exceed the usual levels in industrial plants. Extreme levels of electromagnetic interference can cause the electronics of the printing press to malfunction; they can also damage the press.

The automation system of the printing press uses existing data networks (local area networks) in the building and printing shop to transmit data. Failures or performance reductions in the existing data networks in the building of the printing shop can therefore under certain conditions negatively impact the functioning of the automation system of the newspaper printing press.

WIFAG cannot assume any responsibility for production disruptions of the printing press or damage to the printing press caused by faults or failures in external supply systems or by inappropriate ambient conditions inside the printing shop.

1.8 Data interfaces to other computer systems

The automation system of the printing press can be networked to other computer systems in the newspaper printing shop using specific data interfaces. If the printing press is to operate correctly in production, the data flow in the network of computer systems in prepress, reel handling, the shipping room, and in information systems have to use the specified data interfaces.

If the specified data interfaces are not implemented in accordance with the agreed specifications, the WIFAG printing press may malfunction and production may be disrupted.

If other computer systems in prepress, reel handling, the shipping room and other information systems do not correctly supply the specified data interfaces with data, the WIFAG printing press may malfunction and production may be disrupted.

Poor performance in the networked computer systems in prepress, reel handling, the shipping room, in information systems and in their associated data networks may negatively affect the functioning of the printing press automation system and in turn cause malfunctions in the printing press and interrupt production.

WIFAG assumes no liability for the consequences of faulty data interfaces if the agreed upon data interfaces from the side of the computer systems in prepress, in reel handling, the shipping room, or in information systems have not been correctly implemented in accordance with the agreed upon interface specifications.

WIFAG assumes no liability for the consequences of incorrectly functioning data interfaces if the computer systems in prepress, in reel handling, the shipping room, or in information systems do not correctly deliver data to the specified data interfaces.

1.9 Image-data-based control functions

A WIFAG evolution printing press can be equipped with image-data-based controls for cutting position, circumferential registers and ink density. WIFAG wishes to point out that the image-data-based controls require operative machine presettings and complement the machine presettings. The image-data-based control functions are not a substitute for machine presettings.

The image-data-based control systems work with optical sensors and become enabled only after the print images are visible on the paper web, i.e. after printing ON has occurred. The image-data-based controls can automatically correct inaccurate preset values. The reaction time of the image-data-based controls is physically limited by the delays in the control loops, i.e. the reaction time of the controllers is not indefinitely fast.

For the image-data-based control systems to be enabled for cutting position, circumference register and ink density, they need the complete digital page contents of the respective production run before the printing press starts up. If complete and correctly identified digital page contents are not provided for a given production run the image-data-based controllers for cutting position, circumferential registers and ink density *cannot* control automatically during startup.

The digital page contents are supplied as data files from the makeready phase in an agreed display format (byte maps, TIFF, 254 dpi). The data files for the digital page contents provided from the makeready phase must be correctly identified (name, unique identifier) or addressed (address) so they can be uniquely assigned to the relevant production run or product to be printed (newspaper edition) by the automation system of the printing press.

Each individual data file must be uniquely identified and/or addressed. If the contents of a particular newspaper page change, the name or address of the corresponding data file must also be changed. This can be done, for example, with a corresponding version index or time stamp part of the name or address of the data file. It is not permitted to have a certain identification or address refer to multiple, different data files. It is not permitted to have multiple, different addresses refer to a single data file.

WIFAG assumes no liability for limited functionality or malfunctions in the image-data-based controllers for cutting position, circumference register and ink density if the limited functionality or malfunction of the controller is caused by incomplete, faulty or incorrectly addressed digital page content from prepress.

1.9.1 Cutting position control

A WIFAG evolution printing press can be equipped with image-data-based controls for cutting position. The use of ink image-data-based cutting position controls requires adequate maintenance and proper operation of the printing press. The following requirements in particular are prerequisites that have to be met:

- The brightness sensors have to be clean (i.e. have to be cleaned).
- The webs, ribbons and bundles have to be fed in properly.
- The printing plates have to be properly placed on the plate cylinders in the correct positions.
- The web tension has to be set properly. Ribbons and bundles must not oscillate.
- Newspaper pages must be cleanly printed, meaning that the print image has to be correctly reproduced.

WIFAG assumes no liability for limited functionality or malfunctions of cutting position control if the limited functionality or the malfunctions of the cutting position control is caused by errors in maintenance, in production preparation or by faulty operation of the printing press.

1.9.2 Circumferential register control

A WIFAG printing press can be equipped with regulators for the circumference register. The use of circumference register control requires sufficient maintenance and proper operation of the printing press. The following requirements in particular are prerequisites that have to be met:

- Mark fields have be printed on the newspaper pages.
- The size and arrangement of the mark fields, marks and white areas must satisfy WIFAG specifications.
- Mark fields have be on the newspaper pages in the impression area.
- For variable mark field positions, complete digital page content has to be available for the respective production run.
- The marks must be cleanly printed onto the web, meaning for example with enough ink.
- The optical sensors have to be clean (i.e. the glass windows of the sensor modules have to be cleaned).
- The paper path between the printing couple and sensor modules has to be maintained, that is the web must be correctly fed in.
- The printing couples have to be correctly calibrated (correct zero point of the position transmitter).
- The printing couple registers have to be set properly.
- The color imposition of the printing couples has to match the production data, meaning that the assignment of colors to the individual printing couples has to be correct.
- The printing plates have to be properly placed on the plate cylinders in the correct positions.
- The web tensions have to be set properly.

WIFAG assumes no liability for limited functionality or malfunctions of a circumference register control if the limited functionality or the malfunctions of the circumference register control is caused by errors in maintenance, in production preparation or by faulty operation of the printing press.

1.9.3 Ink thickness control

A WIFAG evolution printing press can be equipped with image-data-based controls for ink density. WIFAG's ink thickness control regulates the solid-tone ink density of the CMYK printing inks in the individual ink zones on the web through the automatic setting of the ink keys in the respective printing couples. The solid-tone ink density can be understood as the measure of the ink layer thickness for the concerned printing ink (cyan, magenta, yellow or black) on the web.

The use of ink thickness control requires sufficient maintenance and proper operation of the printing press. The following requirements in particular are prerequisites that have to be met:

- No scumming or smudging of the print image on the web.
- Correct color register, i.e. correctly set circumference register and sidelay register.
- Proper presettings for water and ink.
- Clean carrier rollers.
- Clean optical element of the sensor for monitoring the printed web.

The correct reproduction of the hue values when printing, especially rasterized images, requires adhering to certain requirements in prepress. The computer programs (e.g. RIP, or raster image processor) used for rasterizing color images (half-tone images) must be appropriately set. The devices used for imaging the printing plates, for example plate exposure system, have to be correctly calibrated.

The ink thickness control cannot correct ink reproduction errors when printing that are caused by malfunctions or incorrect settings in the digital image preparation or in plate imaging in prepress, e.g. in the RIPs (raster image processors), or in plate exposure systems.

The ink thickness control requires calibration that is partly done with test impressions. Without correct calibration, no automatic regulation of the ink density is possible. Re-calibration of the control system is necessary if new consumables such as new printing inks, types of paper or rubber blankets are used. Point increase during printing has an influence on ink thickness control.

Changes in the settings of the RIP (raster image processor) for rasterizing half-tone originals require re-calibration of the ink thickness control. This is especially true for changes in the settings of the RIP for compensating the point increase.

WIFAG assumes no liability for limited functionality or malfunctions in an image-data-based ink thickness control system if the limited functionality or malfunctions of the ink thickness control are caused by problems in image preparation in prepress (e.g. faulty preparation of digital page content, improper rasterizing of half-tone images in the RIP), faulty image setting of the printing plates or unsuitable calibration of the ink thickness control (e.g. for new printing inks, types of paper, rubber blankets).

WIFAG assumes no liability for limited functionality or malfunctions in an ink thickness control system if the limited functionality or the malfunctions of the ink thickness control system are caused by errors in maintenance, in production preparation or by faulty operation of the printing press.

1.10 Direct imaging: Computer-to-Press

A WIFAG evolution printing press can be equipped with functions for Computer-to-Press (CtPress) direct imaging.

To enable Computer-to-Press direct imaging, the corresponding digital plate content is required on time for a production run before the printing press starts up. Without digital plate content that is provided on time, error-free, and correctly identified for the production run at hand, Computer-to-Press direct imaging does not work.

The digital plate contents are to be delivered from prepress (make-ready) as data files in a predetermined format (e.g. bitmap or TIFF at 1351 dpi). Depending on the format of the print product, special resolutions (e.g. 1351) are used in Computer-to-Press direct imaging. The required resolutions in X direction and Y direction can differ. Because the resolutions in Computer-to-Press can be different from those in conventional plate imaging (Computer-to-Plate, or CTP), it may be necessary to set the different parameters in the RIP for rasterizing (e.g. resolution, screen width, screen dot shape, plate characteristic curve).

The data files with plate content delivered from prepress have to be correctly identified (name, unique identifier) and addressed so that the automation system of the printing press can uniquely assign the content to the product (newspaper edition) to be printed and the respective production run.

Each individual data file must be uniquely identified and/or addressed. If the contents of a particular newspaper page change, the name or address of the corresponding data file must also be changed. This can be done, for example, with a corresponding version index or time stamp part of the name or address of the data file. It is not permitted to have a certain identification or address refer to multiple, different data files. It is not permitted to have multiple, different addresses refer to a single data file.

WIFAG cannot assume any responsibility for restricted functionality or malfunctions of the Computer-to-Press direct imaging if the limited functionality or the malfunctions are caused by incorrect or incomplete digital plate contents or incorrectly addressed digital plate contents from prepress (make-ready).

The no-process printing plates to be used in the direct imaging must be handled in accordance with the instructions of the plate manufacturers.
No-process printing plates have a very sensitive surface. Impurities on the plate surface due to dampness, water or other liquid or solid materials must be absolutely avoided. The plate surfaces can be easily scratched. If the plate surfaces contain impurities or are scratched, trouble-free printing cannot be guaranteed. WIFAG assumes no responsibility for direct imaging and printing problems with no-process printing plates if the surfaces of the no-process printing plates are damaged by impurities or scratches.

The plates for a color printed page must either be all conventionally imaged (CTP) or all direct imaged (CtPress). It is not possible to conventionally image (CTP) some plates for a color print page (e.g. cyan and magenta) and to image the other plates directly in the printing press (CtPress) for the color print page (e.g. yellow and black).

If printing is done in one printing couple with adjacent conventional and no-process plates:
the different plate types may require quite different settings for dampening and ink supply in order to achieve satisfactory printing quality.

1.11 Wastage

The type of wastage counting used on the WIFAG newspaper printing press complies with common practice in the newspaper printing industry and is state-of-the-art.

Serving to track wastage, all newspaper copies printed and folded by the printing press are first counted automatically at the folder output. This initial copy counter at the folder outlet of the printing press provides the gross number of printed newspaper copies (good and bad copies).

A second automatic copy counter is installed on the conveyor chain of the dispatch room system, downstream from the waste switch. The printed newspaper copies declared as waste for any number of reasons are separated at the waste switch. The second copy counter provides the net number of good newspaper copies declared as marketable.

The number of detected waste copies is the difference between the two counter readings: Number of waste copies = gross number of copies - net number of copies.

Newspaper copies may be removed or rejected at several points between the first copy counter (gross) and the second copy counter (net). All the newspaper copies removed between the first copy counter (gross) and the second copy counter (net) are automatically counted as waste copies, regardless of the reasons why the newspaper copies were removed.

Downstream from the folder outlet the flow of printed and folded newspaper copies is fed to the pick-up of the conveyor chain of the dispatch room system via the conveyor belt of the folder delivery. At this point newspaper copies can be removed by hand from the conveyor belt of the folder delivery. For instance the printer may at this point remove proof copies by hand to give to customers who have placed advertisements.

The conveyor chain of the dispatch room system also features a second device for removing proof copies; it is installed upstream of the second copy counter and is used by the printer to monitor the print quality of the newspaper copies during production, allowing him to correct the settings of the printing press where necessary.

WIFAG cannot assume any responsibility for excessively high waste figures which is due to removal of newspaper copies (e.g. proof copies for advertising customers) from the conveyor belt of the folder delivery or which is due to removal of newspaper copies at the sample removal station.

If the conveyor chain of the dispatch room system does not correctly pick up the newspaper copies at the folder delivery of the printing press, e.g. due to a skewed pick-up, the newspaper copies may be rejected as wastage even though they were correctly produced by the printing press.

If the conveyor chain of the dispatch room system loses copies due to technical faults, e.g. copies falling from the dispatch room chain, the copies lost from the conveyor chain may be counted as waste even though they were correctly printed and folded by the printing press.

WIFAG cannot assume any responsibility for waste copies that were *not* caused by the printing press. WIFAG cannot assume any responsibility for excessively high waste that is not caused by malfunctions of the printing press.

WIFAG cannot assume any responsibility for waste caused by errors in production preparation, incorrect operation or settings of the printing press or by inadequate maintenance of the printing press. WIFAG cannot assume any responsibility for excessively high waste caused by the use of inappropriate materials, e.g. rubber blankets, ink material. WIFAG cannot assume any responsibility for waste caused by faults in the dispatch room, e.g. malfunctions in the conveyor chain of the dispatch room system.

1.12 Maintenance of the printing press

Large industrial production plants such as newspaper printing presses must receive systematic maintenance if they are to provide the specified availability, production output and production quality, reliably and sustainably.

The maintenance of the printing press requires the assignment of trained personnel who are sufficiently qualified for this task. The technical qualification requirements expected of the personnel assigned to maintenance work on the printing press are specified in the operating instructions.

To be able to carry out the specific maintenance activities, it is imperative that the personnel concerned attend and successfully complete the relevant courses provided by WIFAG and the automation system suppliers (central control consoles, production management computers, etc.). Every course participant who has successfully participated in WIFAG training courses and training courses given by automation system suppliers (central control console, production management computer, etc.) receives a certificate confirming course completion.

The maintenance work to be carried out is described in detail in the operating instructions.

The specified maintenance work is to be carried out systematically and is mandatory if the printing press is to achieve the performance values specified by WIFAG, particularly with regard to availability, production output, print quality and waste.

If the required maintenance work is not carried out properly, WIFAG cannot assume any guarantee that the promised performance values of the printing press with regard to availability, production output, print quality and waste can be achieved.

WIFAG strongly recommends that maintenance schedules be kept so that:

- maintenance activities can be systematically planned far in advance
- maintenance activities can be documented to show which maintenance activities were performed when and by whom
- it can be verified at a later time that the required maintenance activities were performed completely and properly

1.13 Spare parts

Initial provision of spare parts for the printing press is available at the installation site of the printing press.

The first set of spare parts in the standard spare parts packet is included in the WIFAG printing press scope of delivery.

Responsibility for maintaining a sufficient stock of spare parts at all times in order to guarantee production lies with the owner or operator of the printing press. WIFAG cannot assume any responsibility for ensuring that the spare parts store for the printing press is sufficiently stocked at all times.

Only original WIFAG spare parts or spare parts that comply with WIFAG specifications may be used on the printing press. ((CHECK CHECK)) For the computer systems in the control system from suppliers of automation systems ((CHECK))
For the computer systems in the supplied control system of the printing press (central control consoles, production management computers, etc.) from the automation system suppliers, only original spare parts from the automation system suppliers or spare parts complying with specifications of the automation systems suppliers are permitted to be used.

The use of inappropriate spare parts may result in serious malfunctions of the printing press or to damage to the printing press. The use of inappropriate spare parts can have a very negative influence on the availability, production performance and printing quality of the printing press. If inappropriate spare parts are used on the printing press, the relevant WIFAG guarantee is rendered void.

Spare parts must be properly stored if they are to fulfill their purpose and operate correctly when fitted. If spare parts are stored for longer periods they must be adequately maintained so that they remain fully functional. If spare parts are not properly stored and maintained, it cannot be excluded that they will not function correctly when fitted.

The maintenance of spare parts requires the assignment of trained personnel who are sufficiently qualified for these tasks. The technical qualification requirements expected of the personnel assigned to maintenance work on the printing press are specified in the operating instructions.

WIFAG cannot assume any responsibility for disruptions in production that are due to the store of spare parts being insufficiently well stocked by the operator of the printing press; to the use of unsuitable spare parts (which do not comply with WIFAG specifications) or to spare parts that are not properly stored and/or maintained. WIFAG cannot assume any responsibility for negative repercussions on the availability, production output or print quality of the printing press caused by defects in the spare parts management by the operator of the printing press.

1.14 Guarantee

The guarantee for components and assemblies is rendered void if problems are caused by prohibited or inappropriate physical, chemical or electrical influences, if caused by use other than the intended purpose, or caused by generally abnormal ambient conditions and/or improper operating conditions.
Likewise, the guarantee is rendered void if problems on the device can be traced to transport damage for which WIFAG is not responsible, if damage is a result of improper installation and assembly, misuse, non-observance of operating and/or assembly instructions or is due to lacking or improper maintenance.
Warranty claims expire if repairs or interventions are carried out by persons who are not approved and authorized by WIFAG.

2 Operating instructions information

Note

Before you begin work, please read the information about the operating instructions Reg. 1 Introduction and product overview in the *System* file. This information will make it easier for you to work with the operating instructions and product.

3 Overview of the system

Note

You will find an overview of the function groups of the system in Chapt. 9 Overview of the system in Reg. 1 Introduction and product overview in the *System* file.

4 Overview of printing unit

Contents

This chapter contains the following information:

- Chapt. 4.1 Position designations
- Chapt. 4.2 Printing couples
- Chapt. 4.3 Ink and dampening unit

4.1 Position designations

Fig. 1 Printing unit position designations

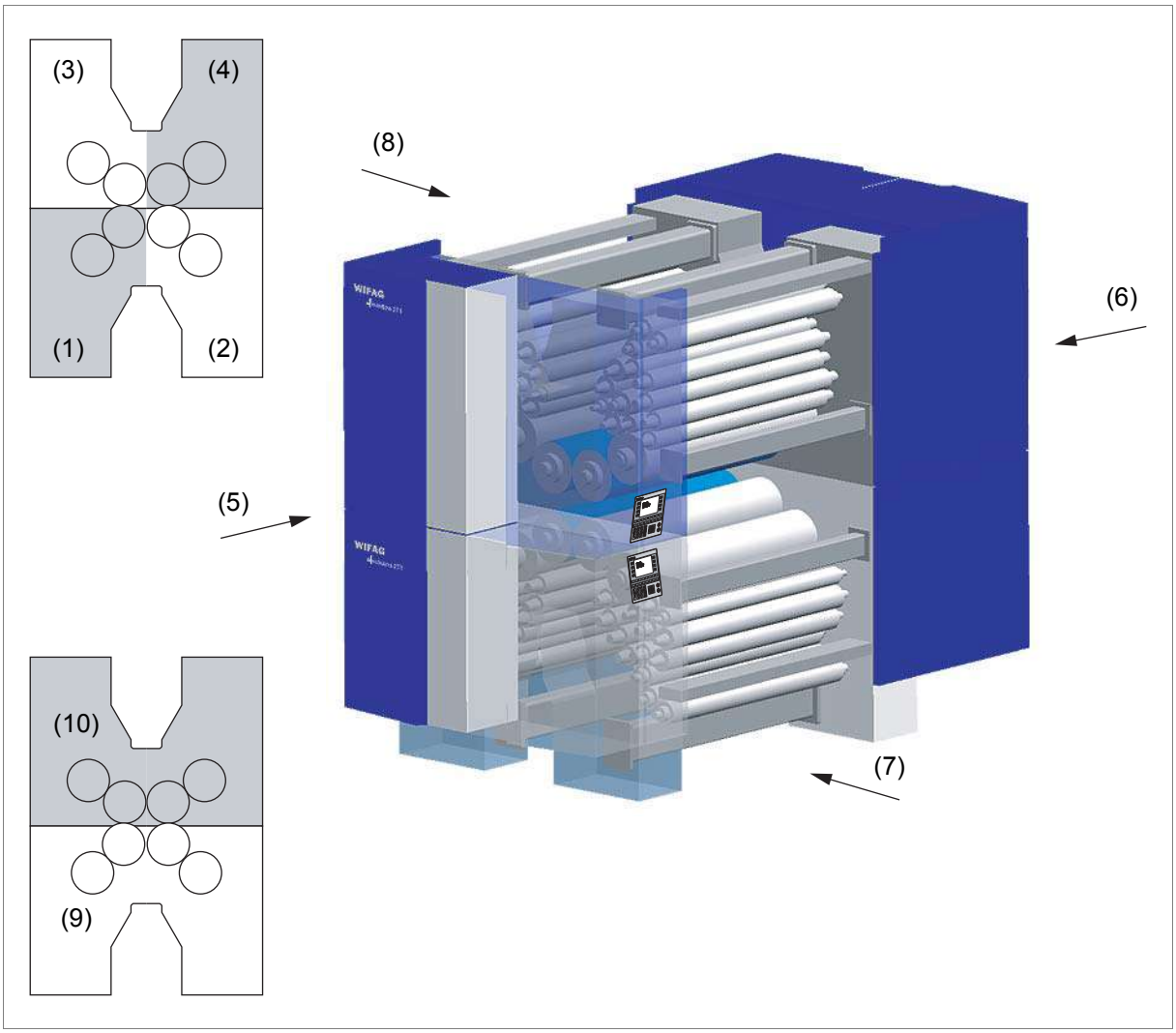

D37e_A001M

(1) Printing couple 1 or 5
(2) Printing couple 2 or 6
(3) Printing couple 3 or 7
(4) Printing couple 4 or 8
(5) Side I (operating side)
(6) Side II (drive side)
(7) Front side right
(8) Front side left
(9) Lower bridge
(10) Upper bridge

4.2 Printing couples

Note

All descriptions and figures in these operating instructions refer to printing couple 1 with an inside dampening unit inside.

Fig. 2 Overview of printing couples, view from side I

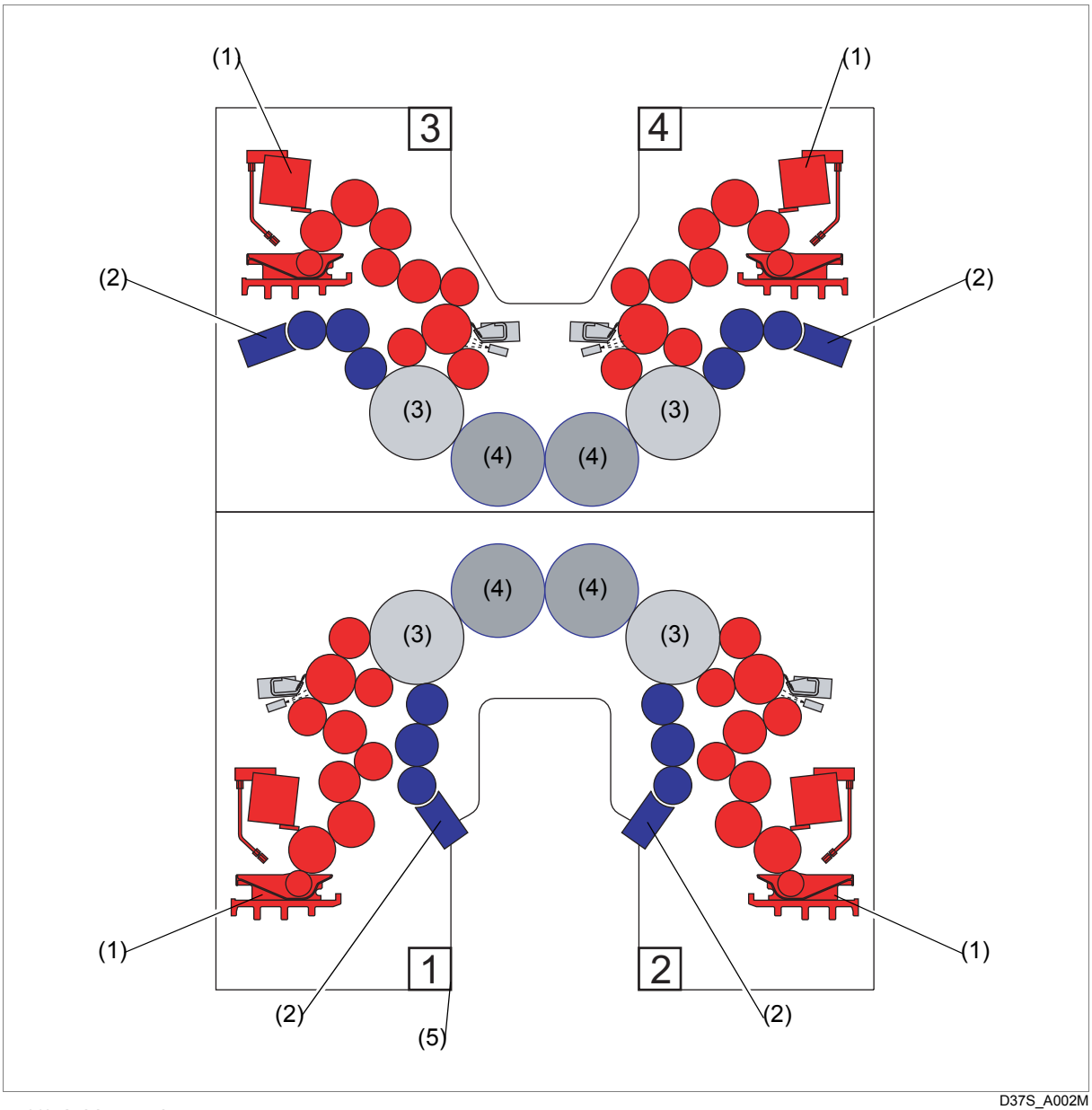

D37S_A002M

(1) Inking unit
(2) Dampening unit
(3) Plate cylinder
(4) Blanket cylinder
(5) Printing couple number

4.3 Ink and dampening unit

Fig. 3 Overview of ink and dampening unit, view from side I

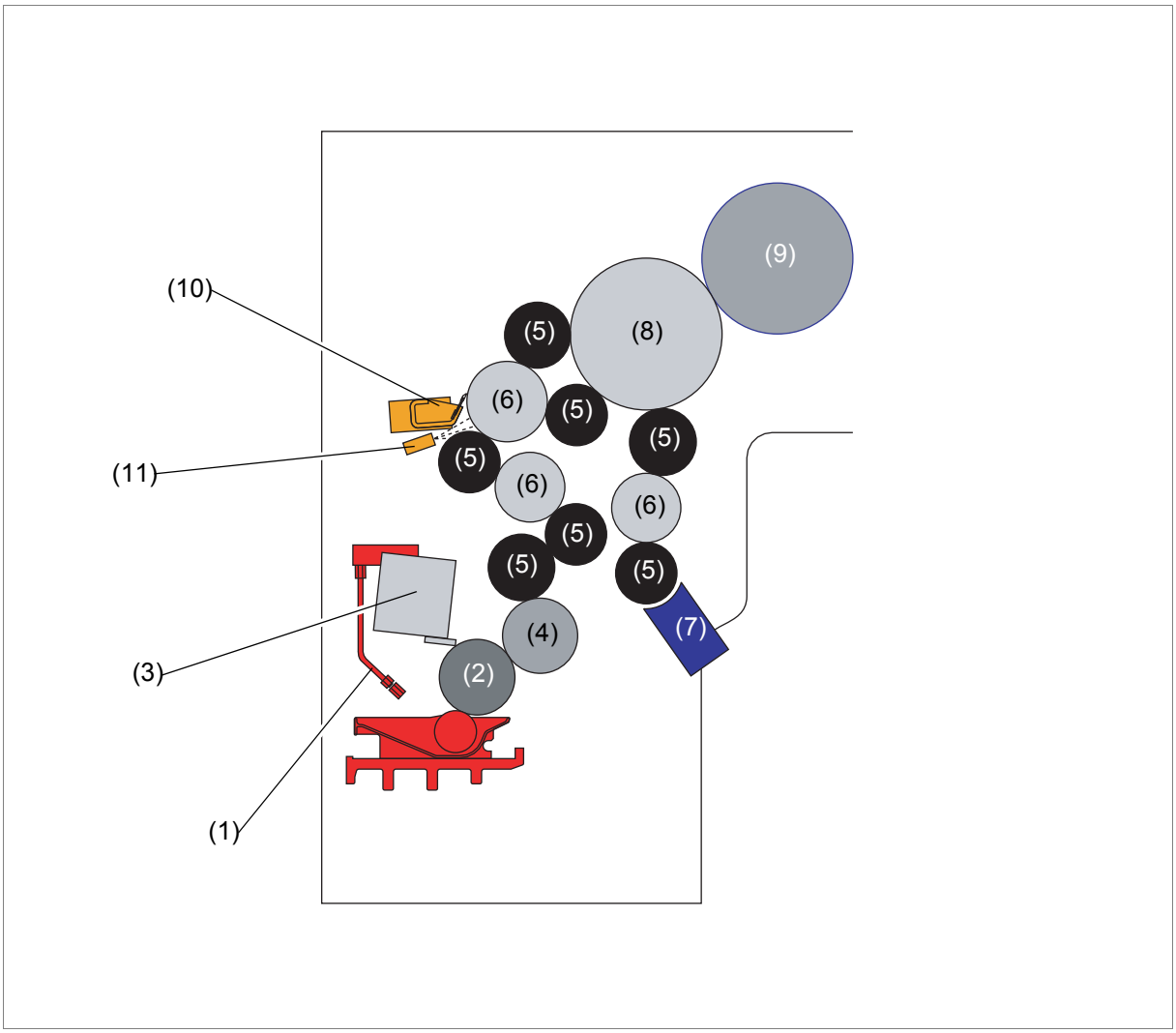

D37S_A003M

(1) Ink supply (Reg. 9 ink supply)
(2) Ink fountain roller (Reg. 10 Ink fountain roller and ink pickup roller)
(3) Ink knife bar (Reg. 11 Ink knife bar)
(4) Ink pickup roller (Reg. 10 Ink fountain roller and ink pickup roller)
(5) Rubber roller (Reg. 15 Rubber rollers)
(6) Oscillating drum (Reg. 14 Oscillating drum and reciprocator drive)
(7) Spray dampening system (Reg. 12 Dampening unit)
(8) Plate cylinder (Reg. 16 Plate cylinder)
(9) Blanket cylinder (Reg. 17 Blanket cylinder)
(10) Roller washing device (Reg. 18 Washing units)
(11) Spraying device (optional) (Reg. 18 Washing units)

2 Important for your safety

1 Basic information 2.3
2 Safety sectors 2.4
3 Working stations of danger zones 2.5
3.1 Overview 2.6
3.2 Cylinder and roller danger zones 2.7
3.3 Ink trough drive danger zones 2.9
3.4 Ink knife bar danger zones 2.10
3.5 Feed-in device danger zone 2.11
3.6 Web monitoring danger zones 2.12
3.7 Crane machine danger zone 2.13
4 Protective devices 2.14
4.1 Overview 2.14
4.2 Guards and covers 2.17
4.3 Operating mode switch 2.18
4.4 Working in the tunnel / mobile terminal 2.19
4.5 Manual drive 2.22
5 Safety switch of the power supply 2.23
5.1 Switching the power supply on and off 2.24
6 key-operated switch 2.27
7 Indicators and warning devices 2.28
8 Stop functions 2.30

1 Basic information

Although your WIFAG system employs state-of-the-art technology and complies with recognized safety regulations, hazards may occur!

Specification

Observe the described danger zones during all work and carry out the described measures!

Specification

Before you begin work, please read Reg. 2 Important for your safety in the *System* file. This information describes how to work safely with the system and avoid accidents.

Specification

Upgrade and reconfiguration work on the system may be performed only by qualified WIFAG personnel for safety reasons.

Specification

All replacement, adjustment and commissioning work not described in these operating instructions may be performed only by qualified WIFAG personnel for safety reasons.

2 Safety sectors

A safety sector is a spatially defined zone on the machine in which one or more electrically monitored guards are combined to form a group. One or more control stations are assigned to each safety sector. All electrically monitored guards in this safety sector are easily visible from the control station(s).

Location and cross section of the safety sectors at the printing unit are represented in (Fig. 1). They extend continuously between the operating side (side I) and the drive side (side II) of the press.

Fig. 1 Location of safety sectors, view from side I

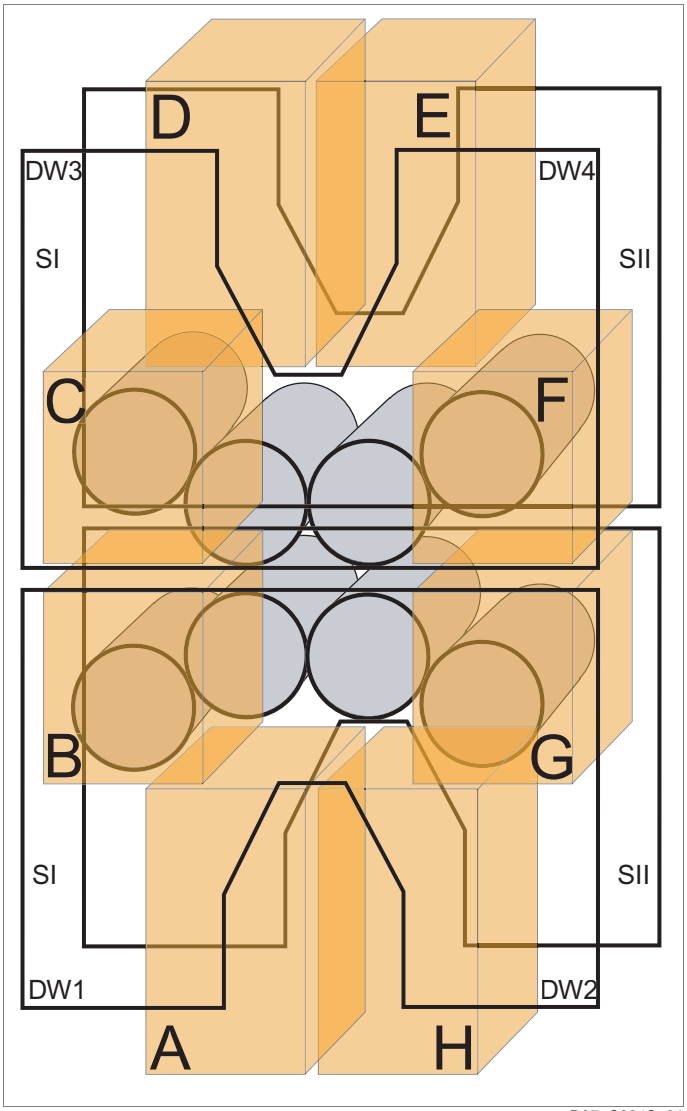

(A) Printing couple 1 / inner
(B) Printing couple 1 / outer
(C) Printing couple 3 / outer
(D) Printing couple 3 / inner
(E) Printing couple 4 / inner
(F) Printing couple 4 / outer
(G) Printing couple 2 / outer
(H) Printing couple 2 / inner

3 Working stations of danger zones

Contents

This chapter contains the following information:

- Chapt. 3.1 Overview
- Chapt. 3.2 Cylinder and roller danger zones
- Chapt. 3.3 Ink trough drive danger zones
- Chapt. 3.4 Ink knife bar danger zones
- Chapt. 3.5 Feed-in device danger zone
- Chapt. 3.6 Web monitoring danger zones
- Chapt. 3.7 Crane machine danger zone

Measures when faults occur on the WIFAG printing tower

- If a malfunction or safety device failure occurs, immediately bring the system to a standstill until the damage has been correctly remedied. Report the instance immediately to WIFAG. The address is on the title page of the supplied files.
- In the event of electrical power supply faults, immediately switch off the entire system or production group.

Note

For further information about troubleshooting can be found in Reg. 9 Troubleshooting in the *System* file.

3.1 Overview

Specification

Take note of the following described danger zones during all work and carry out the described measures!

Fig. 2 View of printing unit

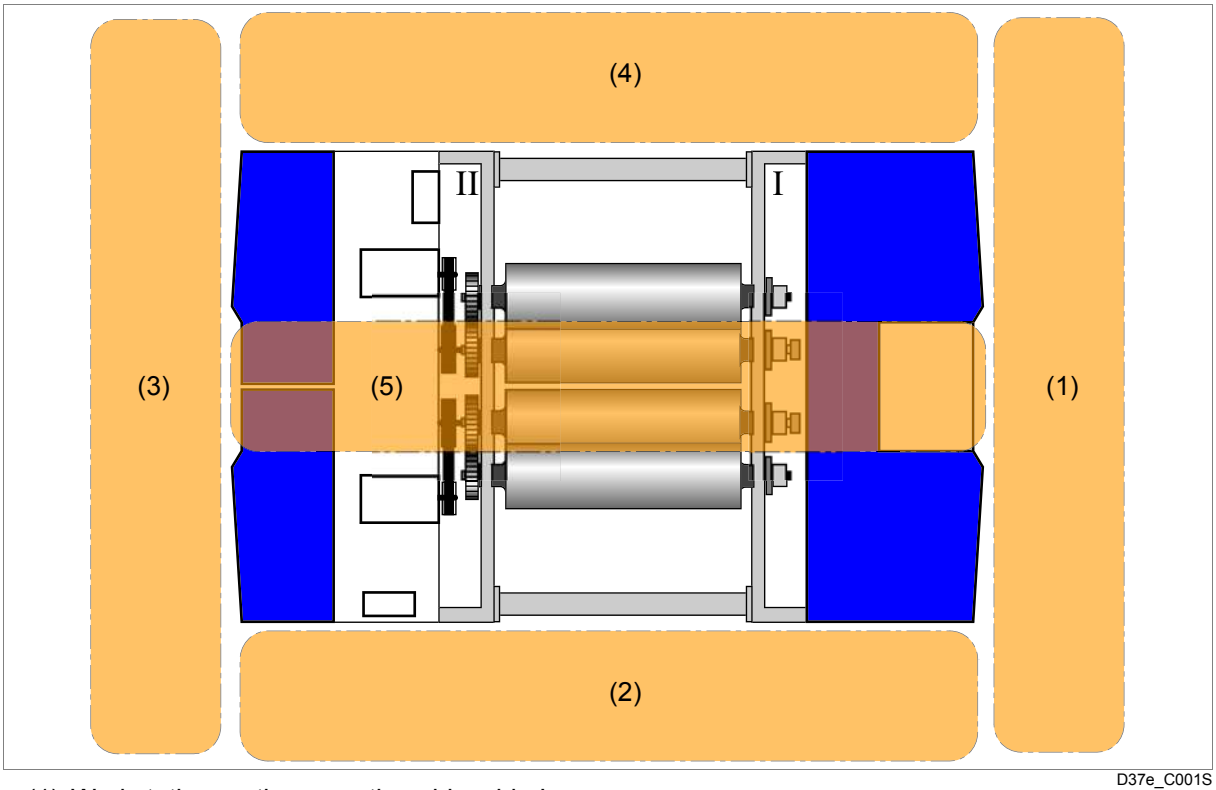

D37e_C001S

(1) Workstation on the operating side, side I

(2) Workstation inside left
(Chapt. 3.2 Cylinder and roller danger zones)
(Chapt. 3.3 Ink trough drive danger zones)
(Chapt. 3.4 Ink knife bar danger zones)
(Chapt. 3.5 Feed-in device danger zone)
Workstation on the operating side, side II

(3) Workstation inside right
(Chapt. 3.2 Cylinder and roller danger zones)
(Chapt. 3.3 Ink trough drive danger zones)
(Chapt. 3.4 Ink knife bar danger zones)
(Chapt. 3.5 Feed-in device danger zone)
Tunnel workstation
(Chapt. 4.4 Working in the tunnel / mobile terminal)
(Chapt. 3.2 Cylinder and roller danger zones)
(Chapt. 3.5 Feed-in device danger zone)
(Chapt. 3.6 Web monitoring danger zones)

Note

The workstations and danger zones are on all levels of the printing towers: operating level, 1st platform, 2nd platform

3.2 Cylinder and roller danger zones

Areas 2, 4 and 5 (Fig. 2)

Counter measures during cleaning and makeready work

WARNING	
	Risk of injury! **Risk of being trapped and crushed** by rotating rollers and cylinders! => Turn operating mode switch to position *MAKEREADY*. => Turn printing couple only with the command *PLACE PLATES* or *LIFT OUT PLATES*. => Inch printing couple *FORWARD* or *BACK* only when nobody is in the danger zone.

Counter measures during repair work

WARNING	
	Risk of injury! **Risk of being trapped and crushed** by rotating rollers and cylinders! => De-allocate function group from the production group at the terminal and electrically disable (push the *SAFE-STOP* pushbutton). => Place *Work in progress!* warning signs on the corre-sponding terminals and control panels.

Fig. 3 Cylinder danger zone

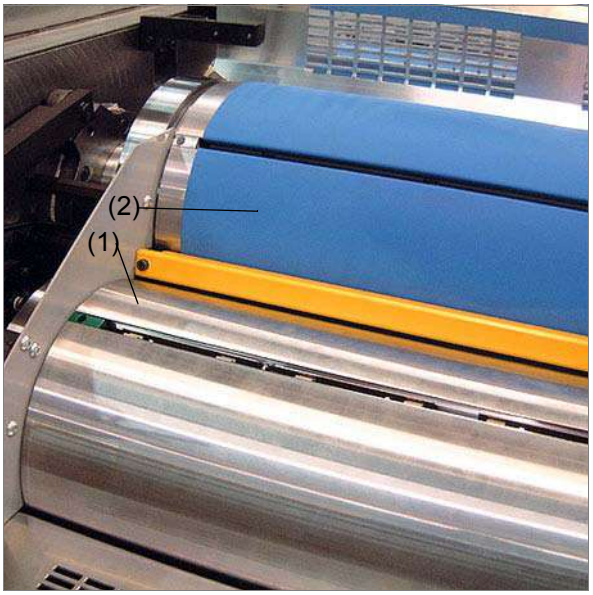

D_141_027_02

(1) Rotating plate cylinder
(2) Rotating blanket cylinder

Fig. 4 Roller danger zone

D_188_012_01

(1) Rotating rubber roller
(2) Rotating oscillating drum
(3) Rotating ink pickup roller

3.3 Ink trough drive danger zones

Areas 2 and 4 (Fig. 2)

⚠ WARNING	**Risk of injury!** **Risk of being trapped and crushed** by rotating gear-wheels and rotating ink fountain roller! => Observe danger zone. => Keep hands at a safe distance from gearwheels and ink fountain roller. => Turn operating mode switch to position *MAKEREADY* when performing makeready work.

Fig. 5 Ink trough drive danger zone

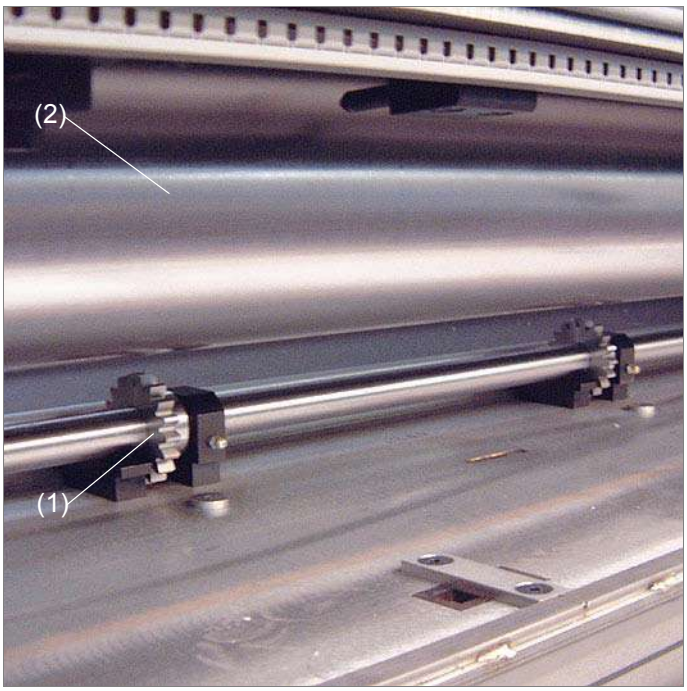

D_173_002_01

(1) Rotating gearwheel
(2) Rotating ink fountain roller

3.4 Ink knife bar danger zones

Areas 2 and 4 (Fig. 2)

WARNING	
	Risk of injury! **Risk of being trapped and crushed** by swiveling ink knife bar! => Keep hands at a safe distance from the ink knife bar. => Swivel ink knife bar only when no persons are in the danger zone.

WARNING	
	Risk of injury! **Injury through cuts** from ink knives! => Observe the danger zone of the ink knife. => Touch ink knife only when wearing protective gloves.

WARNING	
	Risk of injury! **Risk of being trapped and crushed** by rotating gear-wheels and rotating ink fountain roller! => Observe danger zone. => Keep hands at a safe distance from gearwheels and ink fountain roller. => Turn operating mode switch to position *MAKEREADY* when performing makeready work.

Fig. 6 Ink knife bar danger zone

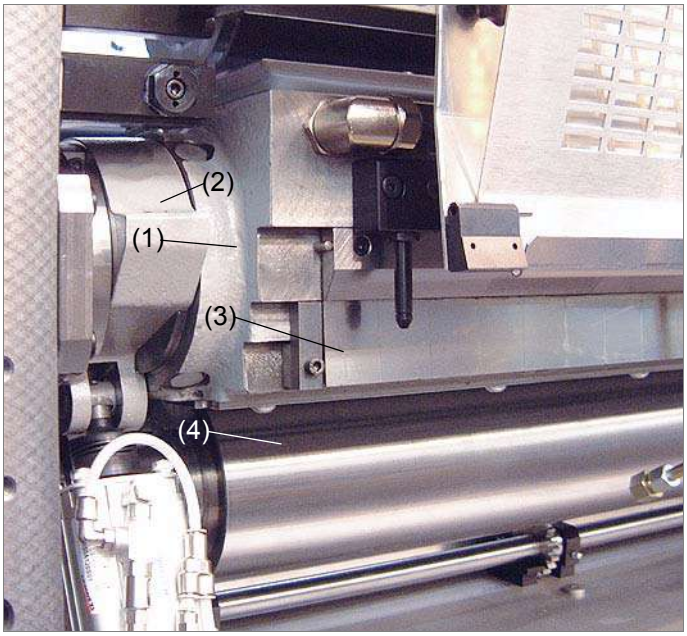

D_173_003_01

(1) Pivoting ink knife bar
(2) Turning throwon
(3) Sharp ink knives
(4) Rotating ink fountain roller

3.5 Feed-in device danger zone

Area 5 (Fig. 2)

⚠ WARNING	**Risk of injury!** **Risk of being trapped and crushed** by rotating guide rollers! => Be careful when a web is drawn in. => Keep hands at a safe distance from the danger zone of the guide rollers.

Fig. 7 Feed-in device danger zone

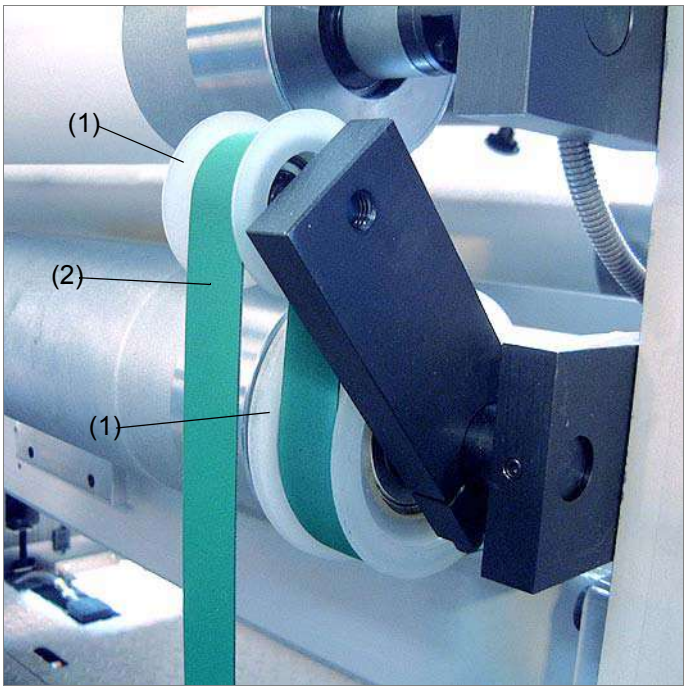

D_136_001_01

(1) rotating guide rollers
(2) Feed-in tape

3.6 Web monitoring danger zones

Area 5 (Fig. 2)

WARNING	**Web severer is sharp!** Risk of cutting injury! => Electrically disable function group (use the *SAFE-STOP* pushbutton). => Place *Work in progress!* warning signs on the corresponding terminals and control panels. => Reduce operating pressure on the concerned filter-regulator-lubricator unit to 0 bar. => Touch web severer only when wearing protective gloves. => Before operation, ensure that no one is touching the web severer.

WARNING	**Pressure rollers throwing on!** Risk of injury due to pulling in, catching and crushing! => Electrically disable function group (use the *SAFE-STOP* pushbutton). => Place *Work in progress!* warning signs on the corresponding terminals and control panels. => Before operation, ensure that no one is touching the anti-reversing device.

Fig. 8 Web severer danger zone

D_147_004_01

(1) Advancing web severer

Fig. 9 Anti-reversing device danger zone

D_188_009_01

(1) ((spelling in original))Pressure roller throwing on

(2) carrier roller

3.7 Crane machine danger zone

For areas see drawing no. 1437288 - 90 (German) / 1437291 - 93(foreign language)

Safety distances between the uppermost machine elements of the printing press and the customer-side crane must be strictly observed. Cannot be implemented with this system; therefore, heed the warning notices.

⚠ WARNING	**Risk of injury!** Risk of being **trapped and crushed** when the gantry crane is traveling. => Avoid places where trapping and crushing could happen. => Avoid collision with crane and crane hook. => Move the crane hook only outside the platform. => Comply with the building-side regulations and safety measures.

4 Protective devices

Contents

This chapter contains the following information:

- Chapt. 4.1 Overview
- Chapt. 4.2 Guards and covers
- Chapt. 4.4 Working in the tunnel / mobile terminal
- Chapt. 4.5 Manual drive

4.1 Overview

Regulation
All safety devices provided by the manufacturer must be present and fully functional. They must not be disassembled, bridged or modified.
If there is a malfunction or failure of a protective device, the system must be immediately brought to a standstill until the damage has been properly remedied and the protective device has been checked in accordance with the WIFAG specifications!

Fig. 10 Guards, control and display elements on the printing tower

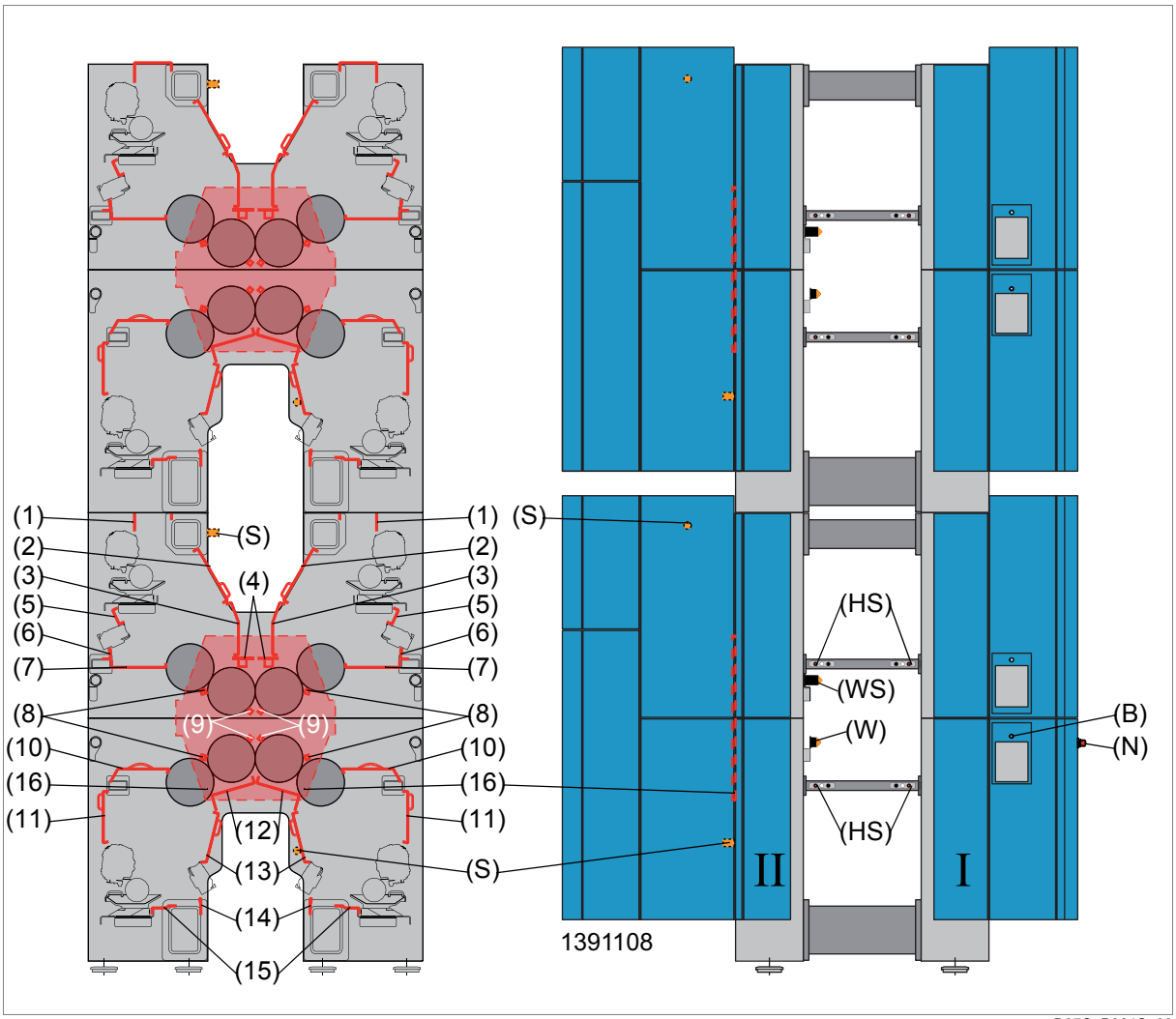

D37S_B001S_03

Tab. 1 Guards, control and display elements on the printing tower (Fig. 10)

Pos.	Description	F/S
B	Operating mode switch (Chapt. 4.3 Operating mode switch)	**F**
HS	*SAFE-STOP* pushbutton (Chapt. 8 Stop functions)	**F**
N	*EMERGENCY-STOP* pushbutton (Chapt. 8 Stop functions)	**F**
S	Socket for portable terminal (Chapt. 4.4 Working in the tunnel / mobile terminal)	**F**
W	Warning lamp orange (Chapt. 7 Indicators and warning devices)	**F**
WS	Warning lamp (orange) / hooter (black), upper bridge (Chapt. 7 Indicators and warning devices)	**F**

Tab. 1 (Cont. Tab.) Guards, control and display elements on the printing tower (Fig. 10)

Pos.	Description	F/S
1	Upper bridge guard (Chapt. 4.2 Guards and covers)	S
2	Inking unit protection device 2 above inside, electrically monitored with lock (Chapt. 4.2 Guards and covers)	F
3	Inking unit protection device 1 above inside, electrically monitored with lock (Chapt. 4.2 Guards and covers)	F
4	Tunnel step (Chapt. 4.2 Guards and covers)	S
5	Inking unit guard upper outer (Chapt. 4.2 Guards and covers)	S
6	Dampening unit, upper outer (Chapt. 4.2 Guards and covers)	S
7	Inking unit protection device upper horizontal, electrically monitored with lock (Chapt. 4.2 Guards and covers)	F
8	Finger guard plate cylinder / blanket cylinder (Chapt. 4.2 Guards and covers)	S
9	Finger guard blanket cylinder - blanket cylinder (Chapt. 4.2 Guards and covers)	S
10	Inking unit protection device lower horizontal, electrically monitored with lock (Chapt. 4.2 Guards and covers)	F
11	Inking unit protection device lower outside, electrically monitored with lock (Chapt. 4.2 Guards and covers)	F
12	Infeed protection blanket cylinder / blanket cylinder (Chapt. 4.2 Guards and covers)	S
13	Inking unit protection device lower inside, electrically monitored with lock (Chapt. 4.2 Guards and covers)	F
14	Dampening unit lower inner with lock (Chapt. 4.2 Guards and covers)	S
15	Ink trough cross-member guard (Chapt. 4.2 Guards and covers)	S
16	Upper bridge / lower bridge cover side II, electrically monitored (Chapt. 4.5 Manual drive)	F

F = electrically monitored guard, control element, display element (function test)
S = permanently screw-mounted guard (visual inspection)

4.2 Guards and covers

A distinction is made between two types of guards at the printing unit:
- Permanently screw-mounted guards
- Electrically monitored guards with lock

Dangerous run commands are blocked by opened (monitored) guards. A distinction is made whether guards are open in one or in several safety sectors (Tab. 2).

Note

Information about the safety sectors is in Chapt. 2 Safety sectors.

Tab. 2 Restrictions due to opened guards

Original position	Effects
The printing couple and/or the interconnected group turns and a monitored guard is opened.	• *SAFE-STOP* is triggered • Printing couple or combined group is run down • Run commands (all drives and actuators) on all control devices of the printing couple or of the entire combined group are disabled
The printing couple and/or interconnected group is at standstill and one or more monitored guards are opened in **one** safety sector of the printing couple or of the whole interconnected group.	• The printing couple can only be run with the commands *INSERT PLATES* or *LIFT OUT PLATES* in makeready mode
The printing couple and/or interconnected group is at standstill and one or more monitored guards are opened in **multiple** safety sectors of the printing couple or of the whole interconnected group.	• Run commands (all drives and actuators) on all control devices of the printing couple or of the entire combined group are disabled

4.3 Operating mode switch

Tab. 3 Operating mode switch

Position	Symbol	Control location	Effect / display
OPERATION	(white on black background with integrated white signal lamp)	Terminal plate	**Changing the operating mode selection switch from** *MAKEREADY* **to** *OPERATION* **causes the following:** • A *SAFE-STOP* command if the printing couples are not at a standstill • Termination of the dominating de-allocation and the application of the currently active allocation status (last input) • Locking the command *INSERT PLATES* or *LIFT OUT PLATES* • Enabling the run commands on the terminals **Signal lamp does not light:** • One or both printing couples are in interconnected mode **Signal lamp lights:** • Both printing couples are in isolated mode
MAKEREADY	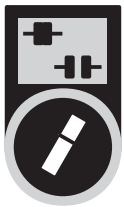		**Changing the operating mode selection switch from** *OPERATION* **to** *MAKEREADY* **causes the following:** • A *SAFE-STOP* command if the printing couples are not at a standstill • A dominating de-allocation of the printing units; all incoming allocation and de-allocation commands are ignored and have no influence on the printing couple) • Enabling the command *INSERT PLATES* or *LIFT OUT PLATES* • Disabling of all run commands on the terminals **Signal lamp lights:** • The printing couples are in makeready mode

4.4 Working in the tunnel / mobile terminal

Tunnel areas provide access to the printing units for maintenance and servicing work (Fig. 11).

In addition, the portable control station can be used to operate the printing units from within the tunnel (Fig. 12).

n order to prevent dangerous movements (triggered by other control devices), the tunnel areas are secured with protective doors and a special operating mode.

⚠ WARNING	**Exposed, rotating rollers and cylinders!** Risk of injury due to pulling in, catching and crushing! => When working, connect the portable terminal or control panel during operation (operation only possible with the remote control station). => Do not touch the rollers, cylinders, and bearings when using the portable terminal or remote control station. => Place the *Work is in progress!* warning sign.

Fig. 11 Tunnel, view from side I

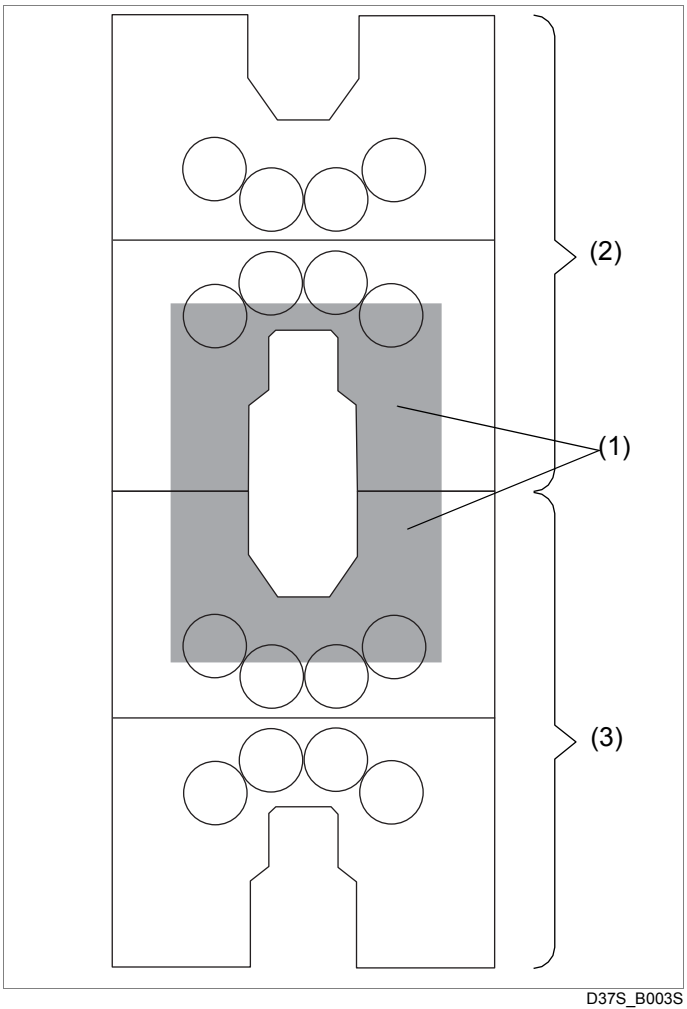

(1) Tunnel area
(2) Upper printing unit
(3) Lower printing unit

Function of the socket / blanking cap

Unscrewing the blanking cap from a socket triggers the *SAFE-STOP* command. In addition, the corresponding printing units are dominantly de-allocated or placed in makeready mode.

Function of the permission pushbutton

So that the run commands *INSERT PLATE* / *LIFT OUT PLATE* can be initiated, at least one of the two permission pushbuttons (3) has to be pressed for safety reasons (Fig. 12). If the permission pushbutton (3) is released or pressed fully while the run command is being carried out, the run command is stopped immediately. For all other run and thrown commands, the permission pushbutton (3) is not pressed.

Fig. 12 Portable terminal

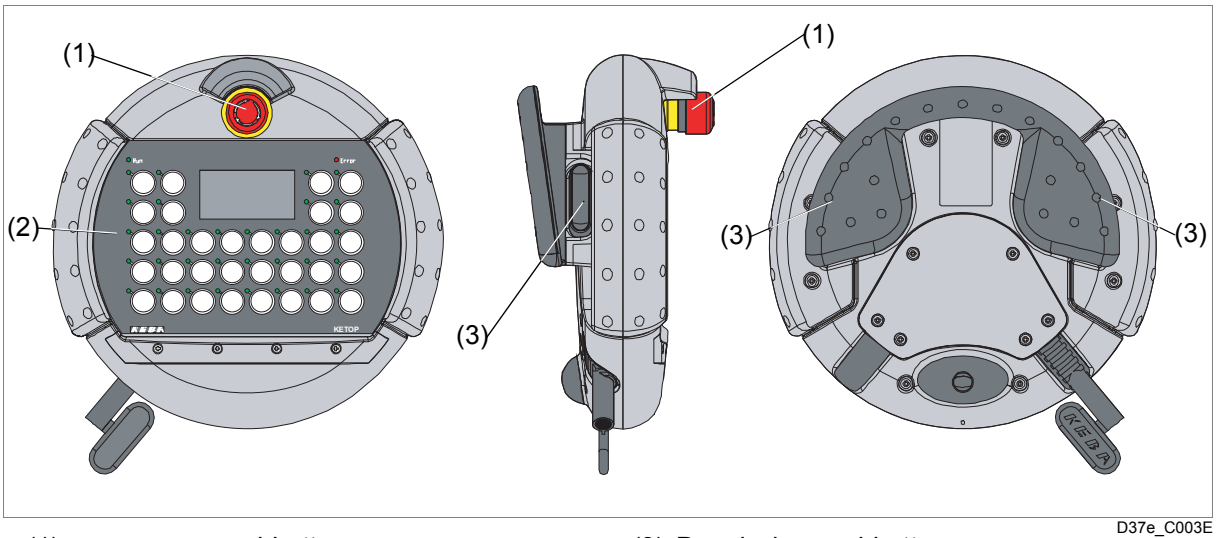

(1) *SAFE-STOP* pushbutton
(2) Control panel with display
(3) Permission pushbutton

4.5 Manual drive

Manual drives are installed on side II of each bridge (Fig. 13); (Fig. 14).

The manual drives are for:

- inching forward and backward during setting and maintenance and repair work.
- freeing people who have been trapped in emergencies (always with a doctor present in serious cases).

When cover (1) is removed, magnetic sensor (2) triggers the *SAFE-STOP* command. The printing couples can be moved manually using the supplied crank handle (3). If the inking unit clutch is disengaged, turn the blanket cylinder and plate cylinder only. If the inking unit clutch is engaged, also turn the oscillating drum and all the rollers that have been thrown onto it.

Fig. 13 Cover, side II

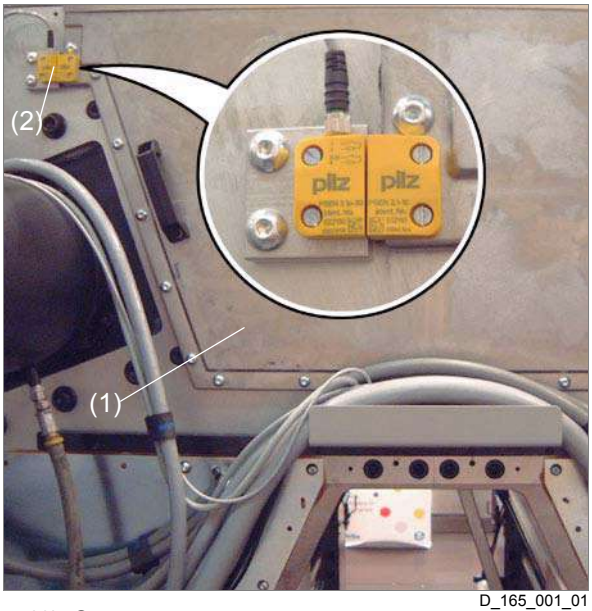

D_165_001_01

(1) Cover
(2) Magnetic sensor

Fig. 14 Manual drive gearing

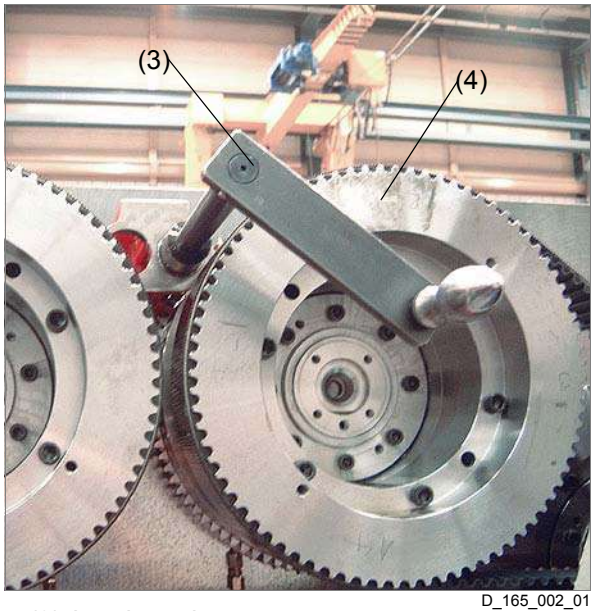

D_165_002_01

(3) hand crank
(4) Blanket cylinder gearwheel

5 Safety switch of the power supply

Specification

The safety switch on the vertical busbar is permitted to be actuated only in an emergency or for maintenance and repair work on the concerned system part!

Specification

When repair work of the electrical system of the printing unit is performed, the safety switch must be secured in the *OFF* position with a padlock and a warning notice must be mounted!

On the front side left side II is a safety switch (1) with which the electrical power supply can be completely cut off (Fig. 16).
The safety switch (1) can be locked in the *OFF* position using a padlock.

Note

Further information about the power supply is in Chapt. 2.1 Power supply in Reg. 7 Electrical and control systems.

5.1 Switching the power supply on and off

The following system parts can be disconnected from the current supply by means of the safety switch (Fig. 16):

- Lower bridge
- Upper bridge

Additional connector sockets cannot be isolated from the voltage supply with the main switch. These remain available and active, even when the system is switched off. Such connector sockets are marked in the switch cabinets with the notice ***EXTERNAL VOLTAGE***.

DANGER	**Danger!** Risk of a lethal electric **shock**! Parts of the system which are switched off can still be supplied with voltage on systems fitted with uninterruptible power supply (UPS). => Work on electrical switching plants may be carried out only by personnel with the relevant training. => Before touching electrical components, ensure that the power to the function group is switched off and check with a voltmeter.

Note

The customer determines how the UPS is connected.

1. Switch the corresponding safety switches (Fig. 16) on or off as per (Fig. 15).
2. Safeguard against unauthorized switching back on.

> Mount a lock and warning notice!

Switch on again

- The safety switch *OFF* secured with padlock.

1. Remove padlock.
2. First push the safety switch down to the absolute *OFF* state.
3. Then push the safety switch up into the *ON* state.
4. Remove warning notice.

> The power supply is again switched on.

Fig. 15 Safety switch printing unit;
front side left side II

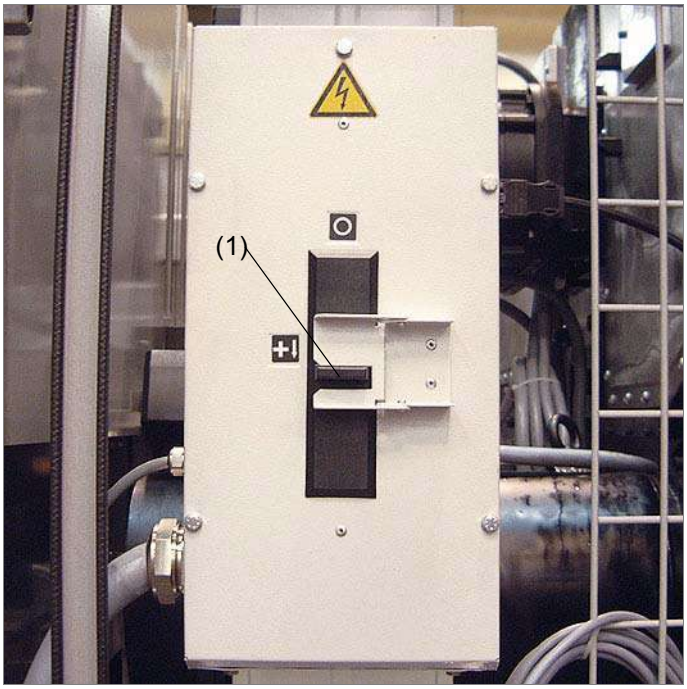

D_131_013_01

(1) Lockable safety switch

Fig. 16 Primary supply of a printing tower, view side I

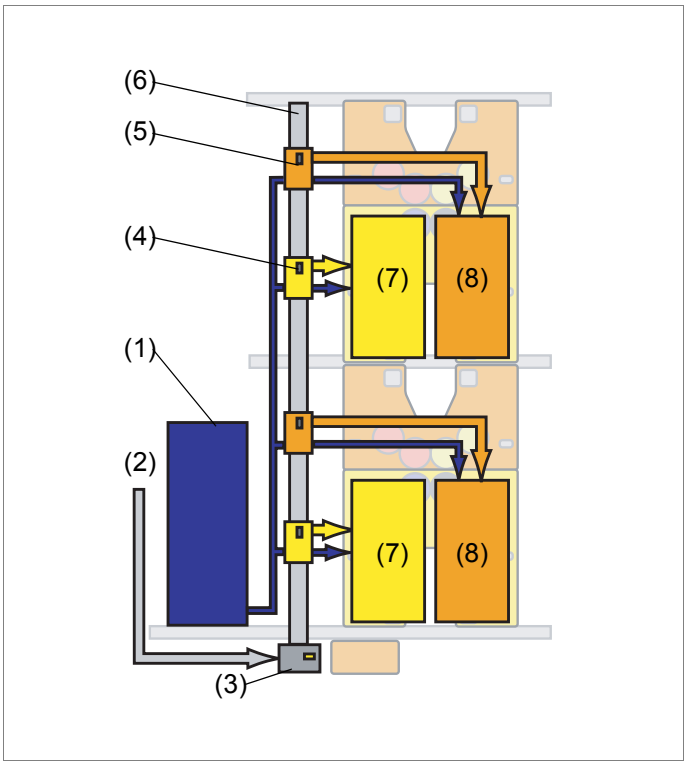

D37e_G003E_01

(1) Section box with UPS distribution
(2) Main supply
(3) Junction box, tower
(4) Junction box, lower bridge
(5) Junction box, upper bridge
(6) Vertical busbar
(7) Bridge box (BK), lower bridge
(8) Bridge box (BK), upper bridge

Components supplied with UPS are specially marked in the switch cabinets:

Tab. 4 UPS markings

Equipment with UPS voltage in excess of 50 V!	**Equipment carrying a dangerous voltage, also when the main switch is switched off (> 50 V)!**
(orange)	(yellow)

6 key-operated switch

Note

There are no key-operated switches on the printing unit.

7 Indicators and warning devices

Note

The meaning of continuously lit or flashing signal lamps or LEDs integrated in the pushbuttons is indicated in the description of the respective pushbutton. Further information is available in Chapt. 2.5 Overview of pushbuttons and commands in Reg. 3 Control elements.

The display elements show the status of the system or specific function groups. In the light test, all signal and warning lights light up continuously.

Note

The positions of the indicators and warning devices are shown on the drawing (Fig. 10).

Tab. 5 Safety-relevant indicators and warning devices

Name	Appearance	Installation location	Display
warning lamp	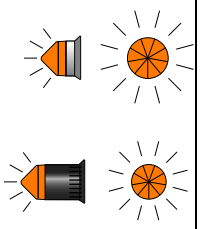 (orange)	Dérouleur Printing unit Angle-bar module Folder-midsection Folder-superstructure Folder Portable terminal	**Flashes slowly (all system parts):** • When the system is to be run in a few seconds in isolated or interconnected mode. **Flashes slowly (autopaster):** • When the system is to be run in a few seconds in isolated or interconnected mode. • When a local movement is performed (e.g. moving support arm). **Flashes rapidly (autopaster):** • Flashes (0.3 s on / 0.3 s off) if it is no longer permitted to enter the protected zone because an automated process is about to begin! (E.g. pasting) **Note:** If the hooter sounds at the same speed, it is then necessary to perform an action immediately. (For example, leave the protection zone immediately and press the *RESET* pushbutton to reset entry protection.). See hooter for details. **Warning:** If not all prerequisites are met when an automatic process is about to begin, a machine stop occurs! If necessary, call up fault messages on the terminal. **Lights continuously (all system parts):** • During the enabling time and warning-free enabling time of all run commands of paper guide drives.

Tab. 5 (Cont. Tab.) Safety-relevant indicators and warning devices

Name	Appearance	Installation location	Display
klaxon	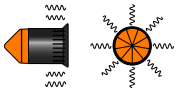 (black)	Dérouleur Printing unit Angle-bar module Folder-superstructure Folder-midsection Folder	**Sounds (all system parts):** • When the system part is to be operated in a few seconds. **Exception:** On the printing unit the commands *INSERT PLATES* and *LIFT OUT PLATES* do not trigger the hooter. **Sounds in rapid succession (autopaster):** • Sounds (0.3 sec. on / 0.3 sec. off) if an action needs to be performed immediately because an automated process (e.g. pasting) is about to begin and not all prerequisites have been met! (For example, leave the protection zone immediately and press the *RESET* pushbutton to reset access protection.) **Caution**: If not all prerequisites are met when an automatic process is about to begin, a machine stop occurs! If necessary, call up fault messages on the terminal. **Exceptions**: Run commands that have an effect on only one single autopaster and are self-actuated on it display only a visual warning (see “Warning lamp”).

8 Stop functions

Note

A detailed description of the stop functions can be found in Chapt. 16 Stop functions in Reg. 2 Important for your safety in the *System* file.

The positions of the stop elements are shown on the drawing (Fig. 10).

Tab. 6 Overview of the functions *SAFE-STOP*, *EMERGENCY-STOP*, *EMERGENCY-OFF*, and *fast stop* functions

Name	Symbol	Control location	Effect / display
Pushbutton *HALT*	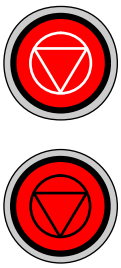 (red)	• Dérouleur • Printing unit • Angle-bar module • Folder	The machine is brought to rest along a ramp entered on commissioning, unbraked but controlled.
Pushbutton *SAFE-STOP*			With the *SAFE-STOP* command all drives of the corresponding safety circuit are brought to a standstill as quickly as possible and secured against restarting. Paper running drives of other safety circuits are likewise brought to a standstill if they are interconnected. Locally running drives that are not running paper of other safety circuits can continue to operate.
	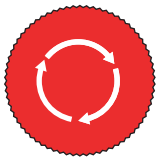 (red on yellow)	Portable terminal	Unlock by turning.
	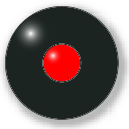 (black and yellow with red signal lamp)	• Dérouleur • Printing unit • Angle-bar module • Folder-superstructure • Folder-midsection • Folder Mounted to each control panel with run commands is a *SAFE-STOP* pushbutton.	Unlock by pulling. **Signal lamp lights up continuously** as long as a *SAFE-STOP* button is pressed in the same safety circuit or in this combined group. **Signal lamp flashes** as long as this button is depressed or there is a fault.

Tab. 6 (Cont. Tab.) Overview of the functions *SAFE-STOP*, *EMERGENCY-STOP*, *EMERGENCY-OFF*, and *fast stop* functions

Name	Symbol	Control location	Effect / display
Pushbutton *FAST-STOP*	(black/white)	central control console	With the *FAST STOP* command all paper guiding drives of the associated combined group are brought to a standstill as quickly as possible. Locally working, non-paper-guiding drives can continue to operate. Unlock by pulling.
Pushbutton *EMERGENCY-STOP*	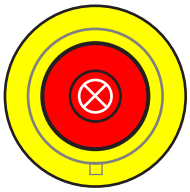 (red on yellow background with red signal lamp)	• Dérouleur • Printing unit (only on lower bridge) • Pillars • central control console	With the *EMERGENCY-STOP* command all drives of the section as well as both neighboring sections are brought to a standstill as quickly as possible and secured against restarting. This is independent of the status of the allocation. Unlock by pulling. Afterward replace the two-part sealing cap over the pushbutton. **Warning lamp lights up continuously**, if an *EMERGENCY STOP* button at another point of the section or neighboring section is pressed. **Signal lamp flashes** as long as this button is pressed.
Pushbutton *EMERGENCY-OFF*	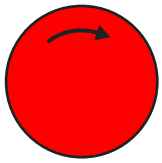 (red)	This push button is mounted by the operator if desired. (optional)	With the *EMERGENCY-OFF* pushbutton, the **main power supply (horizontal busbar) is switched off**. The machine runs down uncontrolled (coasts). The pushbutton remains engaged and can only be unlocked with a key. The pushbuttons are mounted at easily visible, freely accessible locations. This pushbutton is to be pressed only in an absolute emergency situation. Reasons for use include: • Danger to persons due to electric shock • Water and fire hazards

3 Control elements

1 Overview **3.3**

2 Control elements **3.4**
2.1 Terminal panel **3.4**
2.2 Printing couple control panel **3.5**
2.3 Portable terminal **3.6**
2.4 Sockets for portable terminal **3.8**
2.5 Overview of pushbuttons and commands **3.9**
2.5.1 Stop functions 3.9
2.5.2 Operating mode switch 3.11
2.5.3 Pushbuttons for run commands and actuators 3.12
2.6 Design and operation of the terminals **3.13**
2.6.1 Construction and function 3.13
2.6.2 Terminal mask structure 3.14
2.6.3 Terminal mask symbols 3.15
2.6.4 Instructions function 3.18
2.6.5 Help text function 3.19
2.7 Terminal masks **3.21**
2.8 Install terminal software **3.76**

3 Indicators and warning devices **3.77**

4 Malfunction indicators **3.79**

1 Overview

Fig. 1 Overview of control elements, signaling elements, warning signals

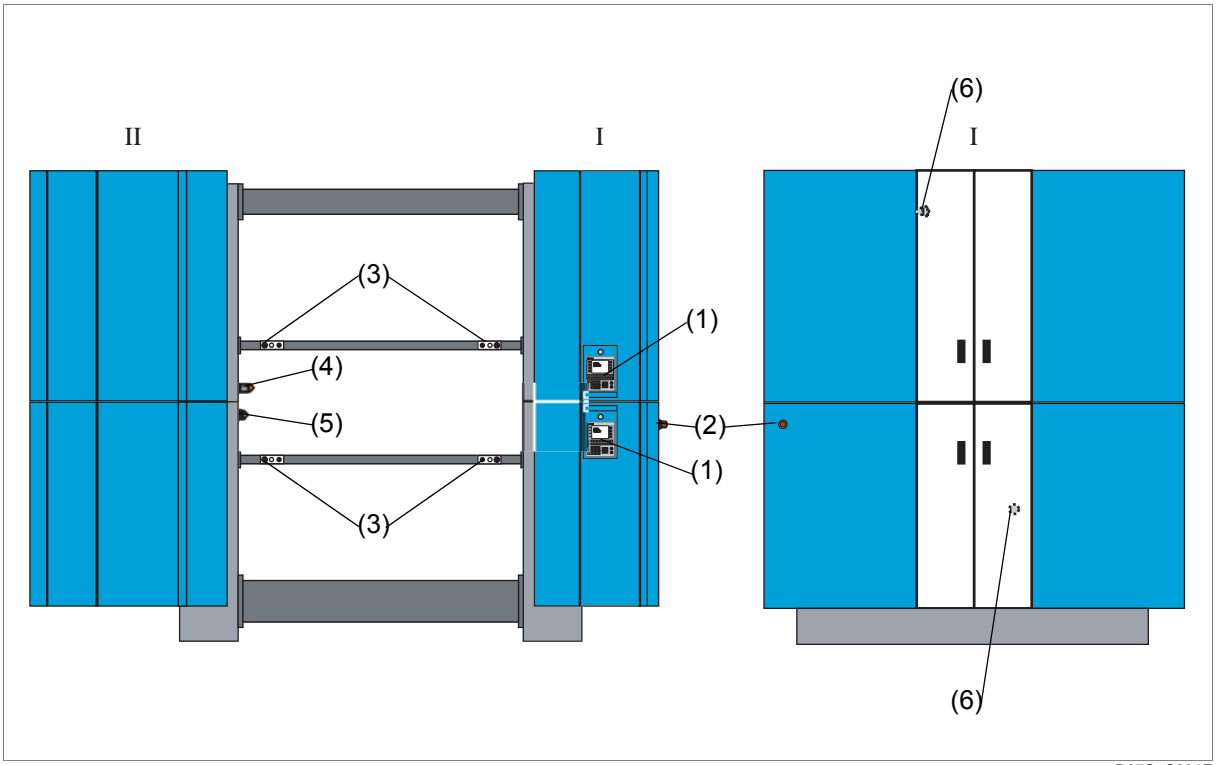

(1) Terminal plate (Chapt. 2.1 Terminal panel)
(2) *EMERGENCY-STOP* pushbutton (Chapt. 2.5 Overview of pushbuttons and commands)
(3) Printing couple control panel (Chapt. 2.2 Printing couple control panel)
(4) Warning lamp with hooter (Chapt. 3 Indicators and warning devices)
(5) Warning lamp (Chapt. 3 Indicators and warning devices)
(6) Sockets for portable terminal (Chapt. 2.4 Sockets for portable terminal)

2 Control elements

Contents

This chapter contains the following information:

- Chapt. 2.1 Terminal panel
- Chapt. 2.2 Printing couple control panel
- Chapt. 2.3 Portable terminal
- Chapt. 2.4 Sockets for portable terminal
- Chapt. 2.5 Overview of pushbuttons and commands
- Chapt. 2.6 Design and operation of the terminals

2.1 Terminal panel

Note

Further information about the terminal is in Chapt. 2.6 Design and operation of the terminals.

A description of the *STOP*, *FEED IN* and *OPERATING MODE SWITCH* pushbuttons can be found in Chapt. 2.5 Overview of pushbuttons and commands.

Fig. 2 Terminal panel

D_141_010_01

(1) Terminal
(2) Operating mode switch **(only lower bridge)**
(3) *STOP* pushbutton
(4) *FEED-IN* pushbutton

2.2 Printing couple control panel

Note

A description of the pushbuttons and commands can be found in Chapt. 2.5 Overview of pushbuttons and commands.

Fig. 3 Printing couple control panel

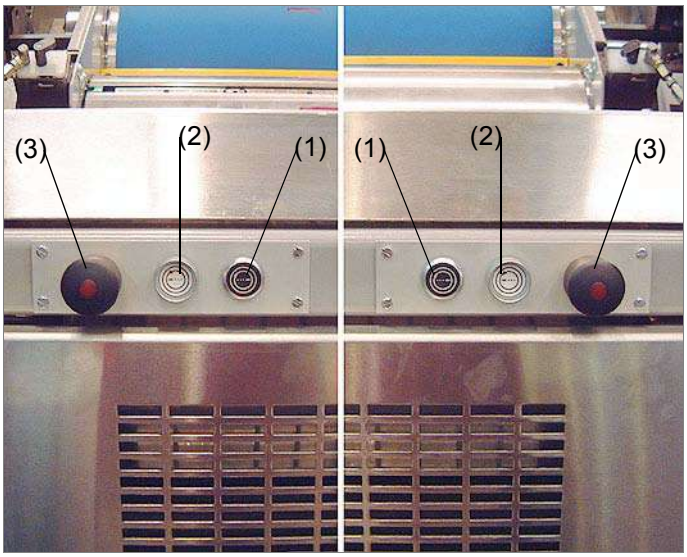

D_149_010_01

(1) *INSERT PLATE* pushbutton
(2) *LIFT OUT PLATE* pushbutton
(3) *SAFE-STOP* pushbutton

2.3 Portable terminal

Function of the permission pushbutton

So that the run commands *INSERT PLATE* / *LIFT OUT PLATE* can be initiated, at least one of the two permission pushbuttons (3) has to be pressed for safety reasons (Fig. 4). If the permission pushbutton (3) is released or pressed fully while the run command is being carried out, the run command is stopped immediately. For all other run and throwon commands, the permission pushbutton (3) is not pressed.

Fig. 4 Portable terminal

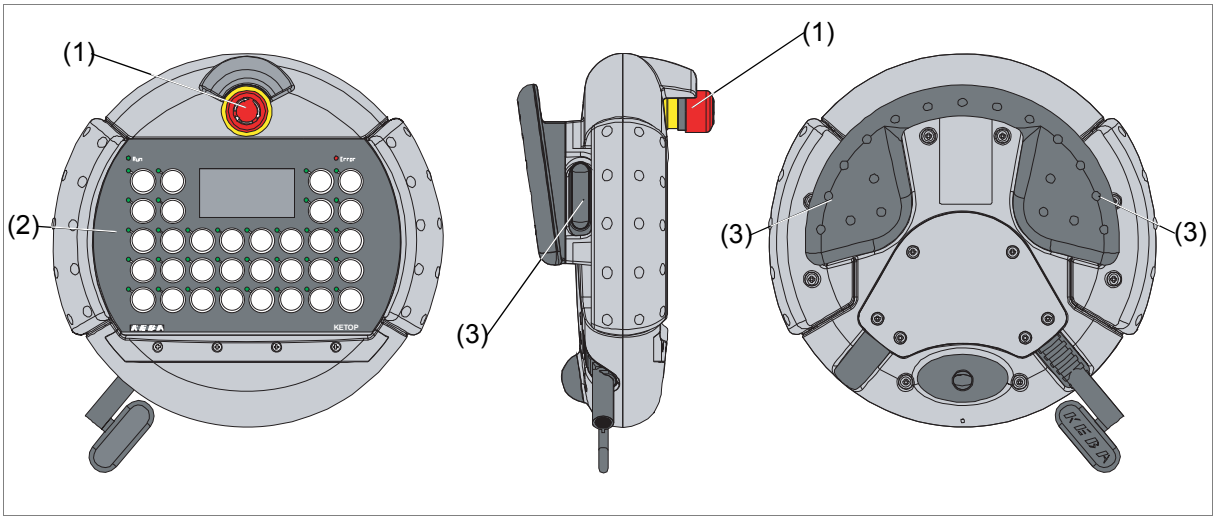

(1) *SAFE-STOP* pushbutton
(2) Control panel with display
(3) Permission pushbutton

Note

A description of the *STOP* and *SAFE-STOP* pushbuttons can be found in Chapt. 2.5.1 Stop functions.
A description of the *INSERT PLATES* and *LIFT OUT PLATES* is found in Chapt. 2.5.3 Pushbuttons for run commands and actuators.
A description of the warning light can be found in Chapt. 3 Indicators and warning devices.

Fig. 5 Control panel with display

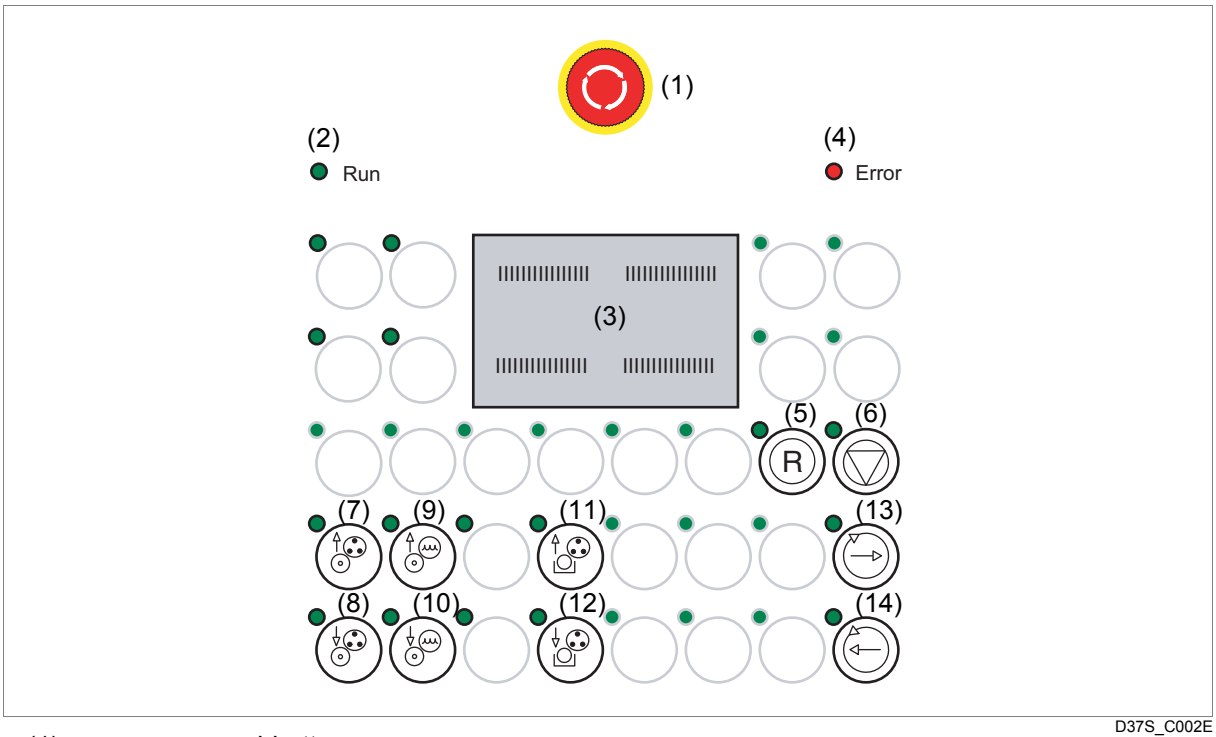

(1) *SAFE-STOP* pushbutton
(2) RUN LED
(same function as warning light)
(3) Display
(4) ERROR LED
Flashes: no assignment to printing couple present
Continuous light: malfunction or stop on drive
(5) *RESET* pushbutton
(6) *STOP* pushbutton
(7) *THROWON INK FORM ROLLER* pushbutton
(8) *THROWOFF INK FORM ROLLER* pushbutton
(9) Throwon *DAMPENING FORM ROLLER PUSHBUTTON*
(10) Throwoff *DAMPENING FORM ROLLER PUSHBUTTON*
(11) *THROWON INK PICKUP ROLLER PUSHBUTTON*
(12) *THROWOFF INK PICKUP ROLLER PUSHBUTTON*
(13) *INSERT PLATE* pushbutton
(14) *LIFT OUT PLATE* pushbutton

2.4 Sockets for portable terminal

Unscrewing the blanking cap from a socket (1); (2) triggers the *SAFE-STOP* command (Fig. 6). In addition, the corresponding printing units are dominantly de-allocated or placed in makeready mode.

Fig. 6 Sockets

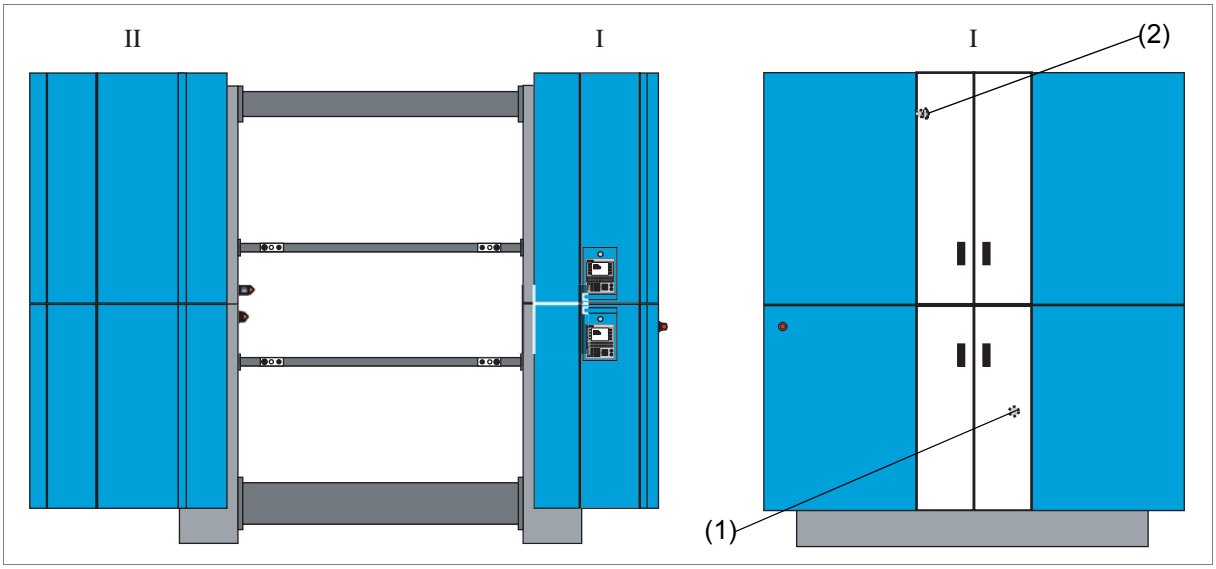

(1) Socket for bridge lower / inside
(2) Socket for bridge upper / inside

Allocation of the portable terminal to the printing couple:

- In the concerned printing couple there must be at least one electrically monitored guard open.
- If no guards are open or if guards are open at the same time in both printing couples, the portable terminal cannot be allocated (LED ERROR flashes).

2.5 Overview of pushbuttons and commands

2.5.1 Stop functions

Tab. 1 Overview of the functions *SAFE-STOP*, *EMERGENCY-STOP*, *EMERGENCY-OFF*, and *fast stop* functions

Name	Symbol	Control location	Effect / display
Pushbutton *HALT*	(red)	• Dérouleur • Printing unit • Angle-bar module • Folder	The machine is brought to rest along a ramp entered on commissioning, unbraked but controlled.
Pushbutton *SAFE-STOP*			With the *SAFE-STOP* command all drives of the corresponding safety circuit are brought to a standstill as quickly as possible and secured against restarting. Paper running drives of other safety circuits are likewise brought to a standstill if they are interconnected. Locally running drives that are not running paper of other safety circuits can continue to operate.
	(red on yellow)	Portable terminal	Unlock by turning.
	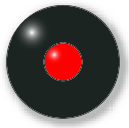 (black and yellow with red signal lamp)	• Dérouleur • Printing unit • Angle-bar module • Folder-superstructure • Folder-midsection • Folder Mounted to each control panel with run commands is a *SAFE-STOP* pushbutton.	Unlock by pulling. **Signal lamp lights up continuously** as long as a *SAFE-STOP* button is pressed in the same safety circuit or in this combined group. **Signal lamp flashes** as long as this button is depressed or there is a fault.

Tab. 1 (Cont. Tab.) Overview of the functions *SAFE-STOP*, *EMERGENCY-STOP*, *EMERGENCY-OFF*, and *fast stop* functions

Name	Symbol	Control location	Effect / display
Pushbutton *FAST-STOP*	(black/white)	central control console	With the *FAST STOP* command all paper guiding drives of the associated combined group are brought to a standstill as quickly as possible. Locally working, non-paper-guiding drives can continue to operate. Unlock by pulling.
Pushbutton *EMERGENCY-STOP*	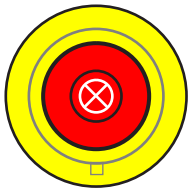 (red on yellow background with red signal lamp)	• Dérouleur • Printing unit (only on lower bridge) • Pillars • central control console	With the *EMERGENCY-STOP* command all drives of the section as well as both neighboring sections are brought to a standstill as quickly as possible and secured against restarting. This is independent of the status of the allocation. Unlock by pulling. Afterward replace the two-part sealing cap over the pushbutton. **Warning lamp lights up continuously**, if an *EMERGENCY STOP* button at another point of the section or neighboring section is pressed. **Signal lamp flashes** as long as this button is pressed.
Pushbutton *EMERGENCY-OFF*	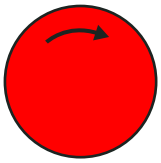 (red)	This push button is mounted by the operator if desired. (optional)	With the *EMERGENCY-OFF* pushbutton, the **main power supply (horizontal busbar) is switched off**. The machine runs down uncontrolled (coasts). The pushbutton remains engaged and can only be unlocked with a key. The pushbuttons are mounted at easily visible, freely accessible locations. This pushbutton is to be pressed only in an absolute emergency situation. Reasons for use include: • Danger to persons due to electric shock • Water and fire hazards

2.5.2 Operating mode switch

Tab. 2 Operating mode switch

Position	Symbol	Control location	Effect / display
OPERATION	(white on black background with integrated white signal lamp)	Terminal panel (Fig. 2)	**Changing the operating mode selection switch from** *MAKEREADY* **to** *OPERATION* **causes the following:** • A *SAFE-STOP* command if the printing couples are not at a standstill • Termination of the dominating de-allocation and the application of the currently active allocation status (last input) • Locking the command *INSERT PLATES* or *LIFT OUT PLATES* • Enabling the run commands on the terminals **Signal lamp does not light:** • One or both printing couples are in interconnected mode **Signal lamp lights:** • Both printing couples are in isolated mode
MAKEREADY			**Changing the operating mode selection switch from** *OPERATION* **to** *MAKEREADY* **causes the following:** • A *SAFE-STOP* command if the printing couples are not at a standstill • A dominating de-allocation of the printing units; all incoming allocation and de-allocation commands are ignored and have no influence on the printing couple) • Enabling the command *INSERT PLATES* or *LIFT OUT PLATES* • Disabling of all run commands on the terminals **Signal lamp lights:** • The printing couples are in makeready mode

2.5.3 Pushbuttons for run commands and actuators

Tab. 3 Pushbuttons for run commands and actuators
*) Effects all drives of the interconnected group

Name	Symbol	Control location	Effect / display
Pushbutton *FEED IN* *)	(gray)	Terminal panel (Fig. 2)	Serves to feed the web into the machine and to start up the machine at a basic speed of 5–10 m/min.
Pushbutton *PLATES INSERT*	(black)	Control panel Printing couple (Fig. 3)	This inching mode for makeready work can be initiated only if the operating mode switch is on the *MAKEREADY* position. **1st button press:** The command is enabled for 30 seconds. **2nd button press:** The machine turns slowly forward or backward (max. 5m/min), and only while the pushbutton is pressed. If the running speed exceeds 5m/min, a *Safe-Stop* is activated. **Last button press:** Each time the inching mode is stopped (releasing the *BUTTON*) the enabling time is extended by 30 seconds.
Pushbutton *PLATES REMOVE*	(white)	Control panel Printing couple (Fig. 3)	

2.6 Design and operation of the terminals

2.6.1 Construction and function

Note

Information on the design and function of the terminal is in Chapt. 2.3 Design and operation of the terminals in Reg. 3 Control elements in the *System* file.

2.6.2 Terminal mask structure

Fig. 7 Terminal mask structure

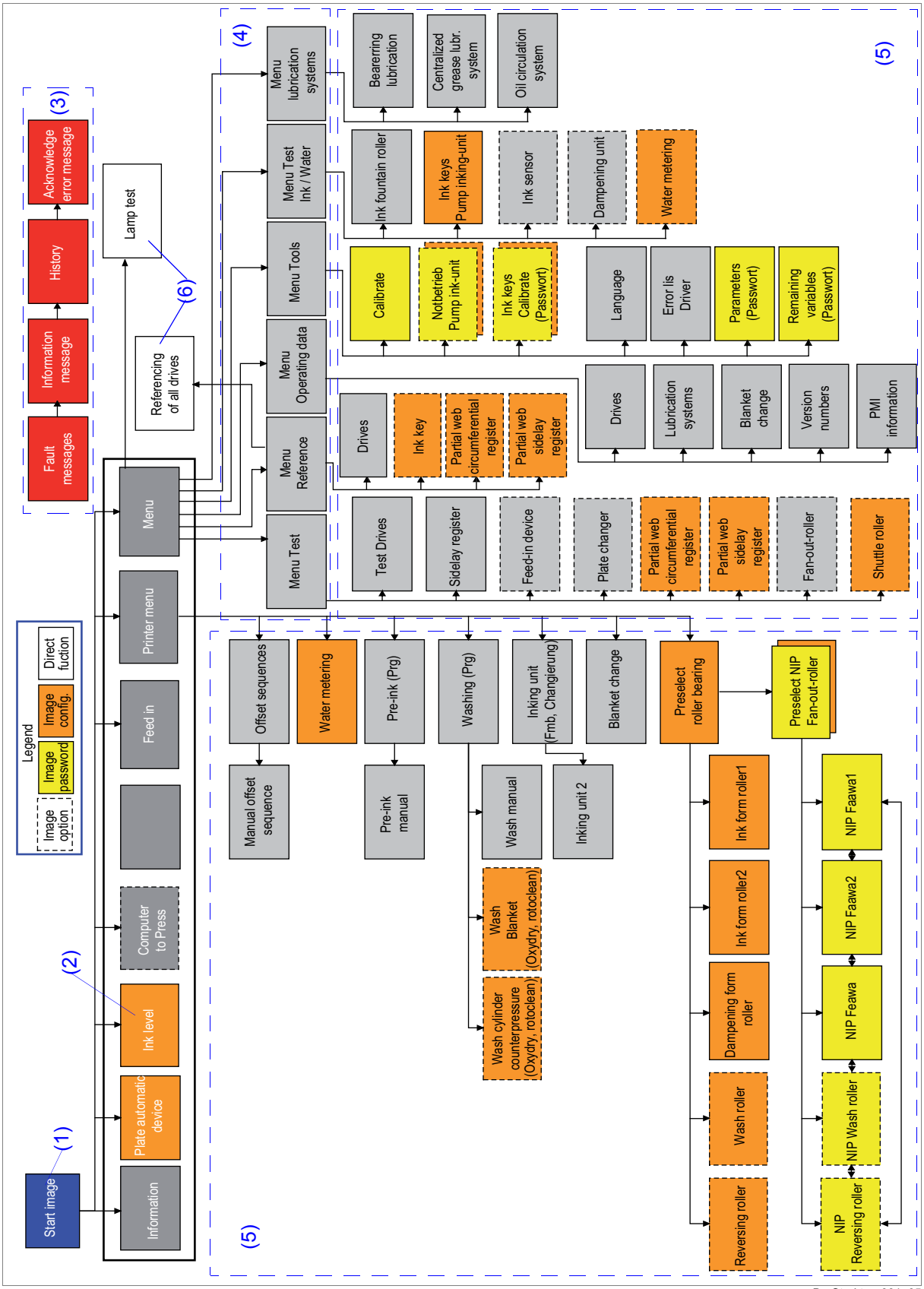

Br_Struktur_001_05

Fig. 7 (Cont. Tab.) Terminal mask structure
(1) Start mask
(2) Direct selection masks
(3) Fault messages [!] chronological list of events
(4) Menu groups [F1 - F8]
(5) Function masks [F1 - F8]

2.6.3 Terminal mask symbols

All symbols and their meanings are listed in the following table.

Tab. 4 Terminal mask symbols

Symbol	Explanation of the symbols in the terminal masks
	Function mask [Information]
	Function mask [Plate allocation \]
	Function mask [Ink level]
	Function mask [Computer to Press]
	Function mask [Feed in]
	Menu mask [Menu Printer]
	Menu mask [Menu\]
	[Fault messages \] mask
	Impression throwon
	Dampening unit
	Inking unit
	Ink fountain roller

Tab. 4 (Cont. Tab.) Terminal mask symbols

Symbol	Explanation of the symbols in the terminal masks
	inking unit coupling
	Main drive
	STOP
	FEED IN
/	State is: not carried out/carried out
	Error message PMI
	Password protected
/	Allocated / De-allocated
| A | B | C | D | | F | E | D | C |	Zone names Printing couple **right** Printing couple **left**
/ / / /	Color imposition: cyan / magenta / yellow / black / not assigned
/	Ink feed: Ready / Feed
/	Printing plate direction: straight / head
/ /	Printing plate: Archive / Finished / Ok
	Pre-inking
	Washing rollers
	Blanket washing
	Remove all plates

Tab. 4 (Cont. Tab.) Terminal mask symbols

Symbol	Explanation of the symbols in the terminal masks
	Stop sequences
	Setpoint entry window after keyboard entry *`Enable setpoint entry`* • Select with cursor keys **[**< / >**]** Selection left / right • Setpoint entry using numeric keypad or **`[+/-]`** keys • **`[ESC]`** Exit entry window. • **`[Enter]`** Confirm entry
	Setpoint entry window after keyboard entry *`Enable setpoint entry`* • Setpoint value range: `Minimum` / `Maximum` • Setpoint entry using numeric keypad or **`[+/-]`** keys • **`[ESC]`** Exit entry window. • **`[Enter]`** Confirm entry

2.6.4 Instructions function

With the key combination **[?] + [F1-F8]** you can call up the `Instructions` function to display a menu or mask explanation in a separate window (Fig. 8).

Fig. 8 Example of an instructions window

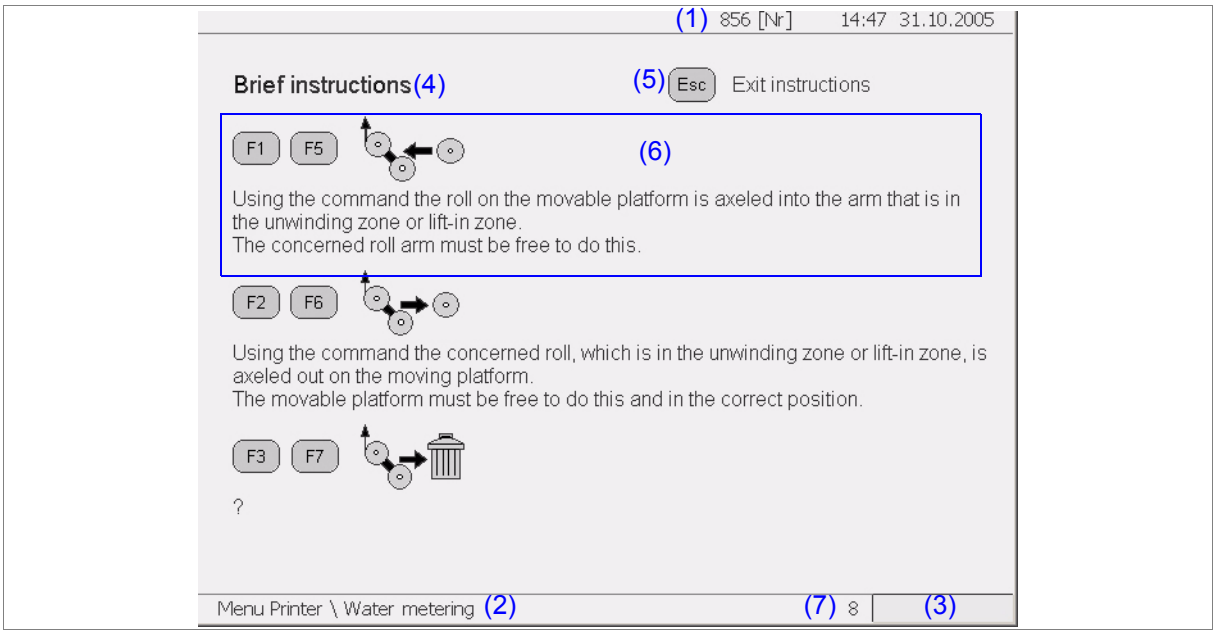

Br_Anl_072

(1) Current mask no. / time and date
(2) Mask name
(3) Message: `Fault/Warning/Event status`
(4) Information text
(5) [ESC] function key > back to previous mask
(6) Instructions / explanation
(7) Number of fault messages

2.6.5 Help text function

If it is not permitted to carry out a command in a particular state, a window with help text appears when you press the key (Fig. 9).

Fig. 9 Example of a help text

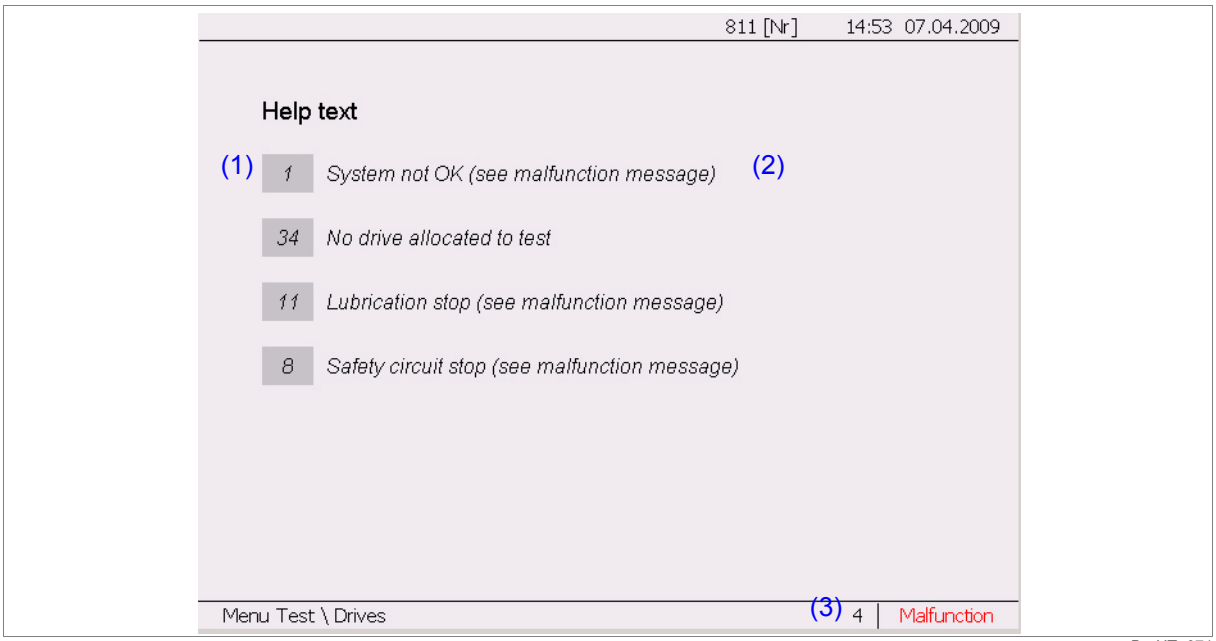

Br_HT_071

(1) Help text no.
(2) Help text
(3) Number of fault messages

2.6.6 Roller arrangement legend

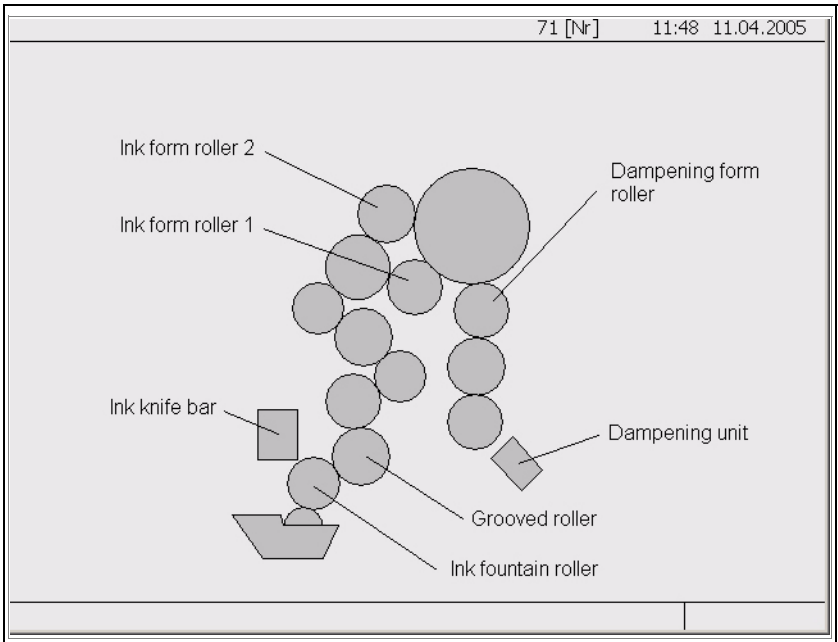

Br_Bild_071_WS370S

Function key	Function
Esc ESC *	Exit mask, return to Menu Printer \ Offset sequences Exit mask, return to Menu Printer \ Pre-inking Exit mask, return to Menu Printer \ Wash

2.7 Terminal masks

Contents

This chapter contains the following terminal masks:

• Start 23
• Information 24
• Plate allocation \ 25
• Ink level 26
• Feed in 27
• Menu Printer 28
• Menu Printer \ Offset sequences 29
• Menu Printer \ Offset sequences \ Manual 30
• Menu Printer \ Water metering 31
• Menu Printer \ Pre-inking 32
• Menu Printer \ Pre-inking \ Manual 33
• Menu Printer \ Wash 34
• Menu Printer \ Wash \ Manual 35
• Menu Printer \ Inking unit 36
• Printer\Inking unit 2 menu 37
• Menu Printer \ Blanket change 38
• Menu\ 39
• Menu Test \ 40
• Menu Test \ Drives 41
• Menu Test \ Sidelay register 42
• Menu Test \ Feed-in device 43
• Menu Test \ Fan-out roller 44
• Menu Reference\ 45
• Menu Reference \ Printing couple drive 46
• Menu Operating data \ 47
• Operating data / Drives menu 48
• Menu Operating data \ Lubrication systems 49
• Menu Operating data \ Blanket 50
• Menu Operating data \ Version 51
• Operating data \ PMI information menu 52
• Menu Tools \ 53
• Menu Tools \ Calibrate printing couple drive 54
• Menu Tools \ Ink key calibration values 55
• Menu Tools \ Adjustable ink keys 56
• Menu Tools \ Languages 57
• Menu Tools \ Languages 2 58
• Menu Tools \ Error list 59
• Menu Tools \ Drive parameters 60
• Menu Tools \ Remaining variable 61

• Menu Test \ 62
• Menu Test \ Ink fountain roller 63
• Menu Test \ Ink keys 64
• Menu Test \ Ink sensor 65
• Menu Test \ Dampening unit 66
• Menu Test \ Water metering 67
• Menu Lubrication systems \ 68
• Menu Lubrication systems \ Bearing ring lubrication 69
• Menu Lubrication systems \ Centralized grease lubrication 70
• Menu Lubrication systems \ Oil circulation lubrication 71
• Fault messages \ 72
• Information message 73
• Fault messages\history 74
• Fault messages\history\chronological list of events 75

2.7.1 Start

Br_Start_002

Note

Press any key to continue.

2.7.2 Information

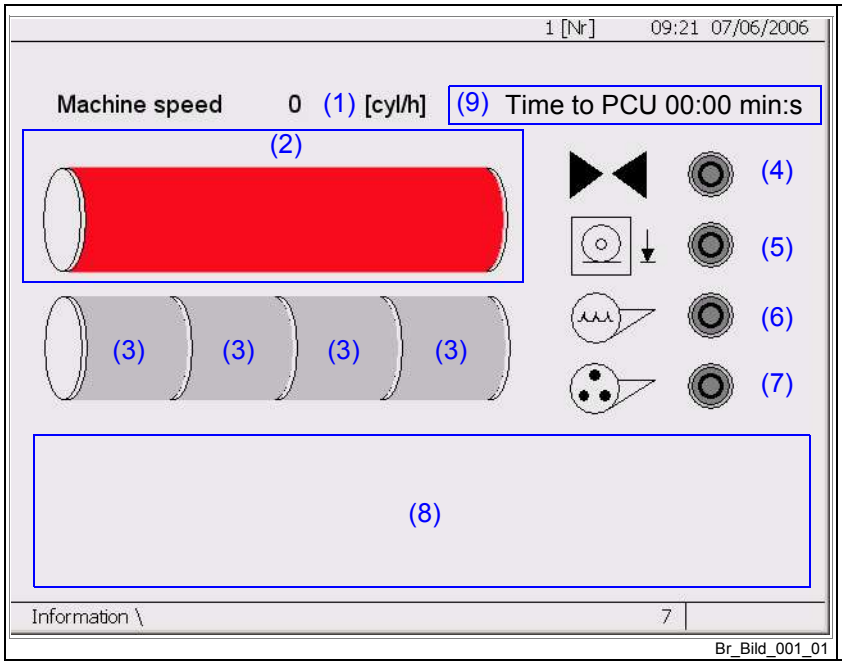

Variable		Meaning
(1)	0…42000 [cyl/h]	Current production speed
(2)	/ - - - /	Soiling display or current color imposition: dirty/ C - M - Y - K / not assigned
(3)	- - - /	Zone A- B-C- D is: pre-inked (C - M - Y - K) / not preinked
(4)	/ /	Printing couple is: not allocated / preselected / allocated
(5)	/ /	Printing is: off / preselected / on
(6)	/ /	Moisture is: off / preselected / on
(7)	/ /	Inking unit is: off / preselected / on
(8)	Text	Various help text information about the current printing couple status
(9)	00:00 - 60:00 min:s	Time to PCU plate change

2.7.3 Plate allocation \

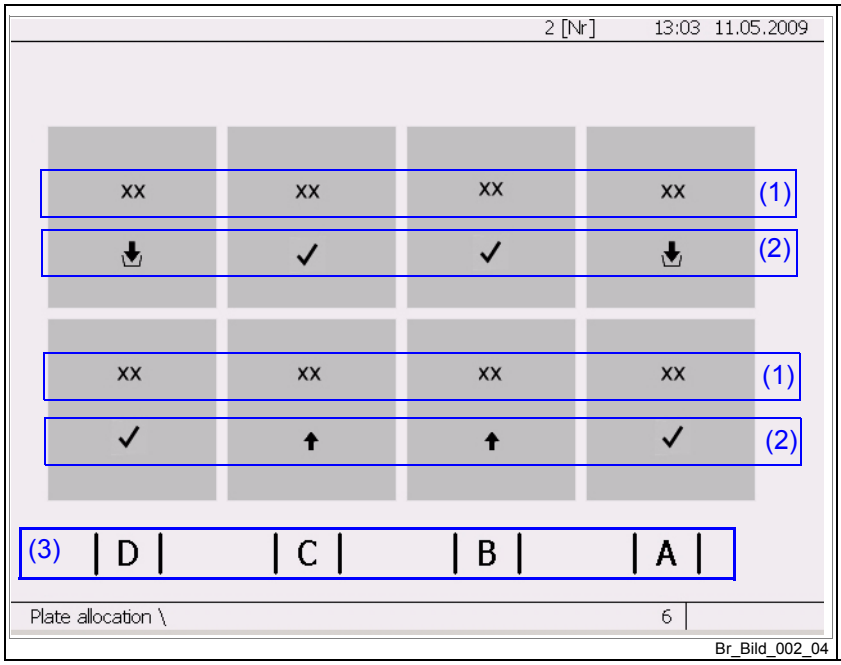

Variable		Meaning
(1)	xxxx…xxxx	Printing plate: Number
(2)	↑ / ↓ / ✓	Printing plate: Archive / Finished / OK
(3)	Zone / A B C D (ri) Zone / D C B A (lf)	Plate allocations per zone and printing couple (inking unit - right / left)

2.7.4 Ink level

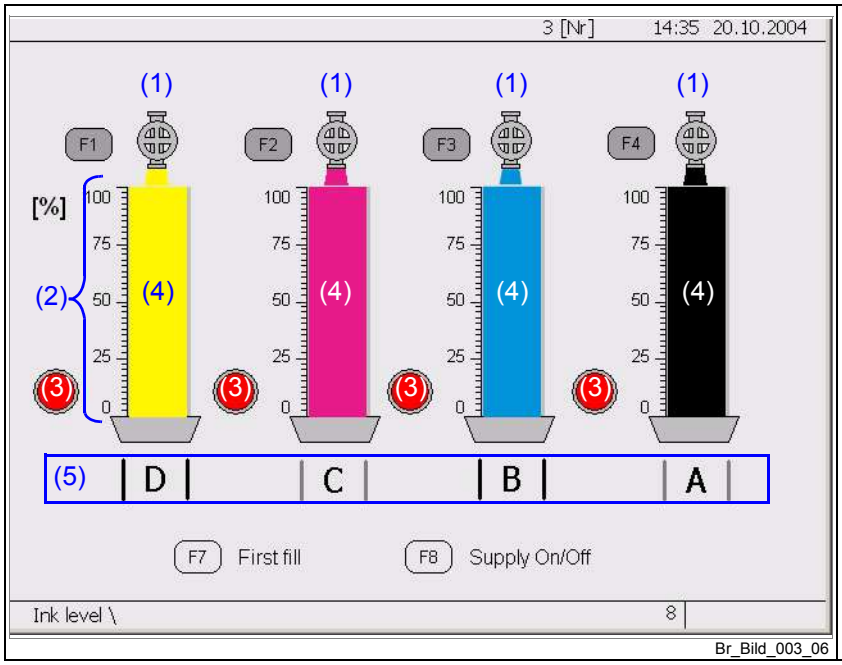

Br_Bild_003_06

Function key		Function
F1 / F3	Fill ink trough	Fill corresponding ink trough on printing couples 2, 4, 6, 8
F2 / F4	Fill ink trough	Fill corresponding ink trough on printing couples 1, 3, 5, 7
F7	First fill	Fill ink troughs of all zones
F8	Supply	Switch ink supply On/Off

Variable		Meaning
(1)	/	Fill is: Inactive / Active
(2)	0…100 [%]	Current fill amount of the ink trough
(3)	/ / / /	Fill disabled / Active / Switched on / Setpoint OFF / Setpoint ON
(4)	- - - /	Current color imposition: C - M - Y - K / not assigned
(5)	Zone / A B C D (ri) Zone / D C B A (lf)	Color imposition per zone and printing couple (inking unit - right / left)

2.7.5 Feed in

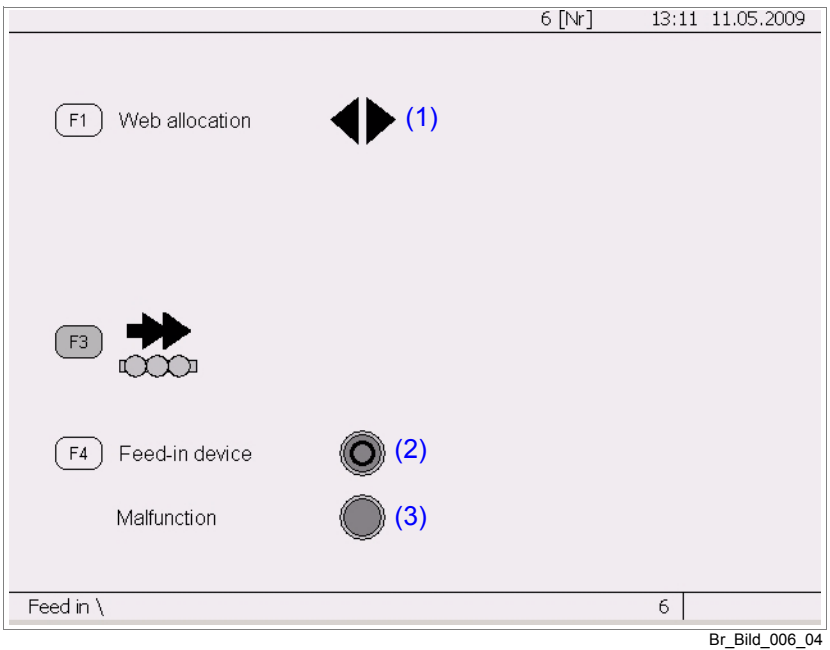

Br_Bild_006_04

Function key	Function
F1 Web allocation	Allocate/de-allocate web to production
F3 Drive back feed-in chain	Drive back feed-in chain into the chain buffer in the autopaster
F4 Feed-in device	Switch feed-in device On/Off

Variable	Meaning
(1)	Web is allocated/de-allocated to production
(2)	Feed-in device is switched on/off
(3)	Feed-in device is: Ready / Malfunction

2.7.6 Menu Printer

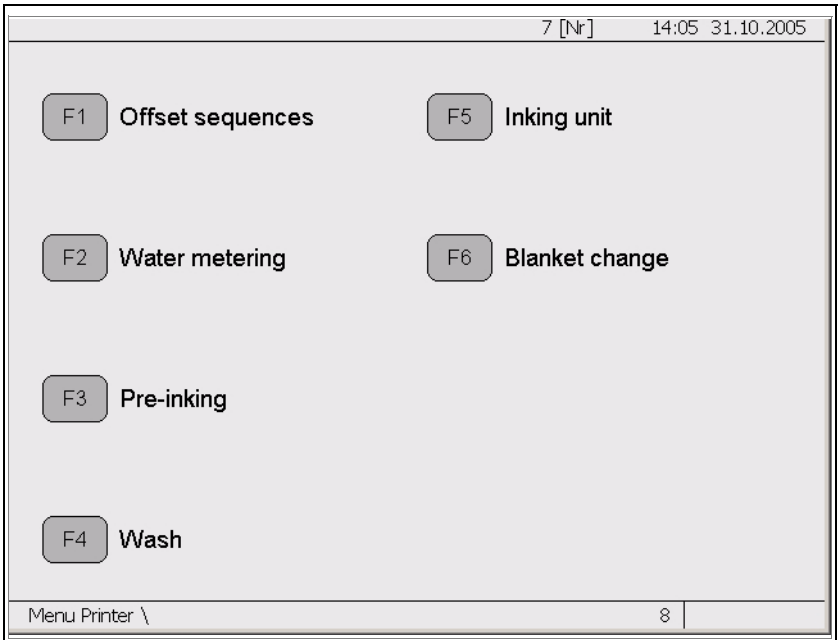

Br_Bild_007_01

Function key	Function
F1 Offset sequences	Change to mask
F2 Water metering	Change to mask
F3 Pre-inking	Change to mask
F4 Wash	Change to mask
F5 Inking unit	Change to mask
F6 Blanket change	Change to mask

2.7.7 Menu Printer \ Offset sequences

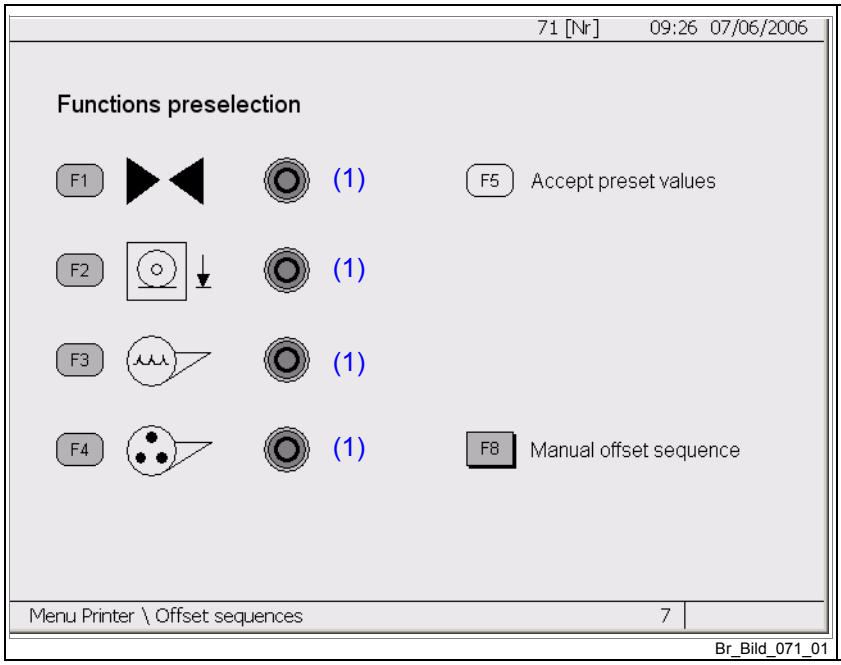

Function key		Function
F1	Allocation preselection	Preselect allocation for offset sequences
F2	Printing ON preselec-tion	Preselect impression throw-on for offset sequences
F3	Dampening unit prese-lection	Preselect dampening unit for offset sequences
F4	Inking unit preselection	Preselect inking unit for offset sequences
F5	Accept preset values	Accept production preset values for offset sequences
F8	Manual offset sequence	Change to mask (?+F8 Roller arrangement legend)

Variable		Meaning
(1)	○/●	Preselection is switched on/off

2.7.8 Menu Printer \ Offset sequences \ Manual

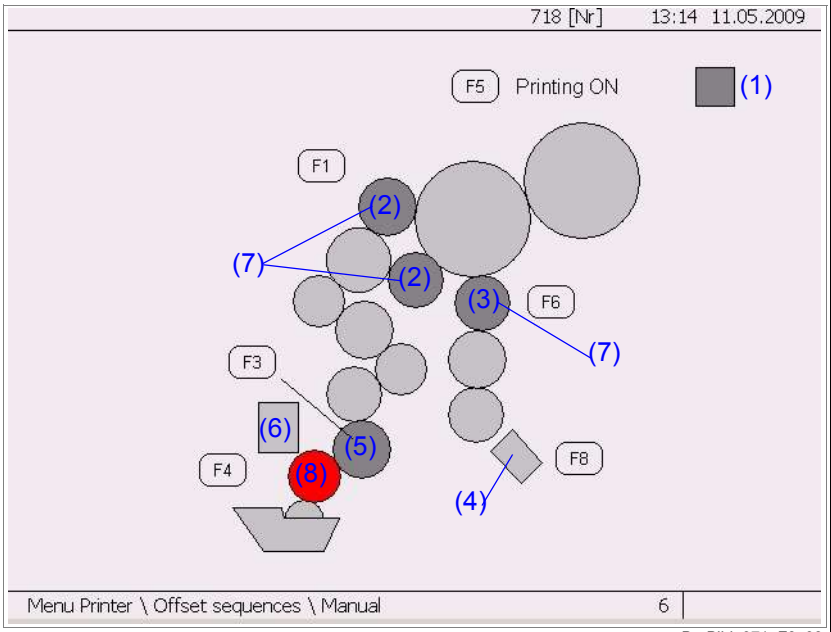

Br_Bild_071_F8_03

Function key		Function
F1	Ink form rollers throwON / throwOFF	Throw ink form roller ON/OFF plate cylinder
F3	Ink pickup roller throwON / throwOFF	Throw ink pickup roller ON/OFF ink fountain roller
F4	Ink fountain roller ON/OFF	Switch ink fountain roller On/Off
F5	Printing ON	Throw blanket cylinder ON/OFF blanket cylinder and plate cylinder
F6	Dampening form roller throwON / throwOFF	Throw dampening form roller ON/OFF plate cylinder
F8	Dampening unit ON/OFF	Switch spray dampening system On/Off

Variable		Meaning
(1)	/	Impression throwon is: Thrown OFF / Thrown ON
(2)	↘ / ↖	Movement direction
(3)	→ / ←	Movement direction
(4)	/ /	Dampening unit is: Ready / Disabled / Active
(5)	/	Ink pickup roller is: Thrown OFF / Thrown ON
(6)	/ /	Ink knife bar is: thrown off / disabled / thrown on
(7)	/ /	Rollers are: thrown off / disabled / thrown on
(8)	/ /	Ink fountain roller is: off / disabled / on

2.7.9 Menu Printer \ Water metering

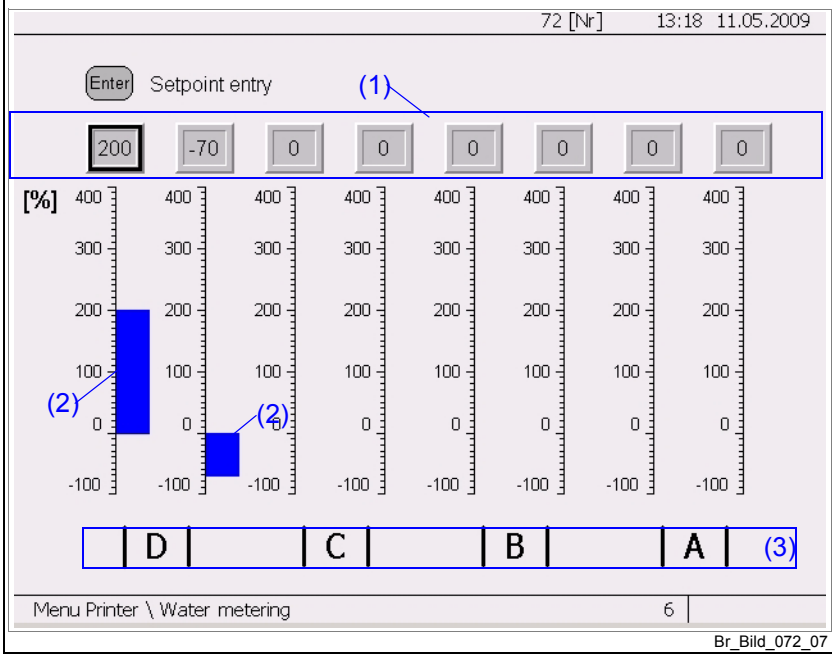

Br_Bild_072_07

a Enter setpoint in the indicated range:

- Select with cursor keys [< / >] Selection left / right
- Maximum & minimum value defined in window for each entry
- Entry using numeric keypad or *[+/-]* keys
- *[ESC]* Exit entry window.
- *[ENTER]* Confirm entry

Function key	Function
Enter Setpoint entry	Setpoint value for corresponding nozzle

Variable		Meaning
(1)	-99…400 [%]	Setpoint
(2)	↑ -100…400 [%]	Water metering actual value
(3)	Zone / A B C D (ri) Zone / D C B A (lf)	3 nozzles per zone and printing couple (inking unit - right / left)

2.7.10 Menu Printer \ Pre-inking

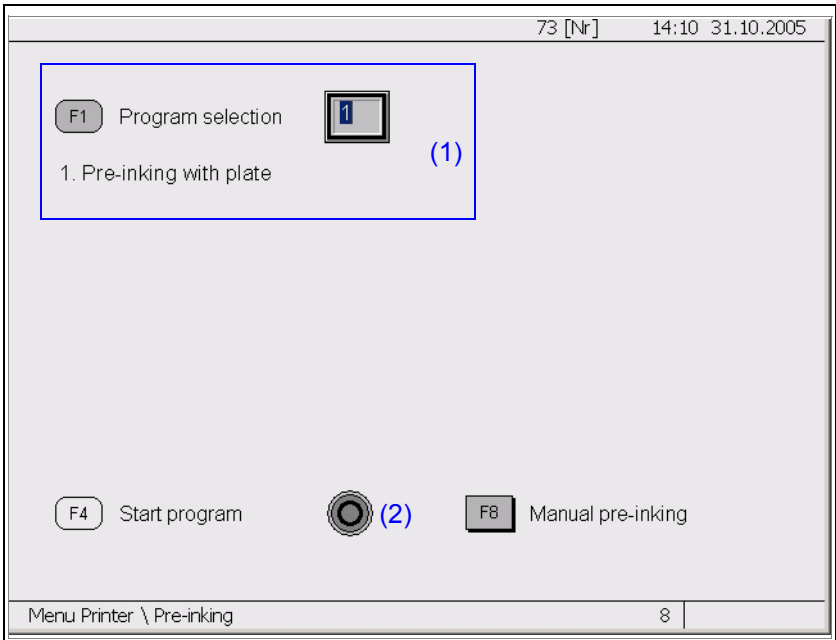

Br_Bild_073_01

a Enter setpoint in the indicated range:
- Maximum & minimum value defined in window for each entry
- Entry using numeric keypad or *[+/-]* keys
- *[ESC]* Exit entry window.
- *[ENTER]* Confirm entry

Function key		Function
F1	Program selection	Select program
F4	Start program	Start up selected program
F8	Manual pre-inking	Change to mask (?+F8 Roller arrangement legend)

Variable		Meaning
(1)	1…99	Program selection no. (from list)
(2)	○/●	Program is: not started / started

2.7.11 Menu Printer \ Pre-inking \ Manual

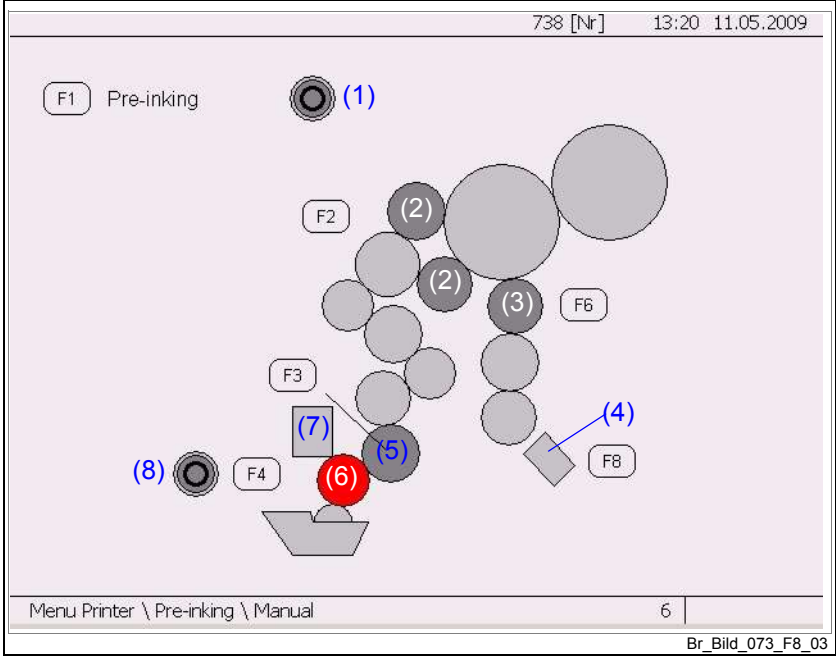

Br_Bild_073_F8_03

Function key		Function
F1	Pre-inking	Pre-ink printing couple (printing couple drives are switched on)
F2	Ink form rollers throwON / throwOFF	Throw ink form roller ON/OFF plate cylinder
F3	Ink pickup roller throwON / throwOFF	Throw ink pickup roller ON/OFF ink fountain roller
F4	Ink fountain roller preselection On / Off	Select / deselect ink fountain roller
F6	Dampening form roller throwON / throwOFF	Throw dampening form roller ON/OFF plate cylinder
F8	Dampening unit ON/OFF	Switch spray dampening system On/Off

Variable		Meaning
(1)	○ / ●	Pre-ink printing couple is: Off/On
(2)	↘ / ↖	Movement direction
(3)	→ / ←	Movement direction
(4)	■ / ■ / ■	Dampening unit is: Ready / Disabled / Active
(5)	● / ●	Ink pickup roller is: Thrown OFF / Thrown ON
(6)	■ / ■ / ■	Ink knife bar is: thrown off / disabled / thrown on
(7)	● / ● / ●	Ink fountain roller is: off / disabled / on
(8)	○ / ●	Ink fountain roller is: not preselected / preselected

2.7.12 Menu Printer \ Wash

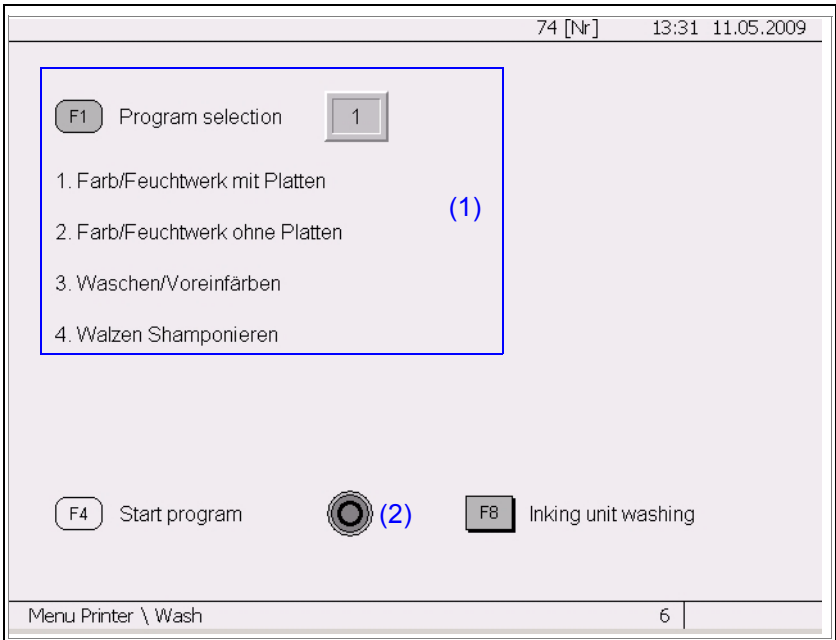

Br_Bild_074_01

a Enter setpoint in the indicated range:
- Maximum & minimum value defined in window for each entry
- Entry using numeric keypad or *[+/-]* keys
- *[ESC]* Exit entry window.
- *[ENTER]* Confirm entry

Function key		Function
F1	Program selection	Select program
F4	Start program	Start up selected program
F8	Inking unit washing	Change to mask (?+F8 Roller arrangement legend)

Variable		Meaning
(1)	1…99	Program selection no. (from list)
(2)	○/●	Program is: not started / started

2.7.13 Menu Printer \ Wash \ Manual

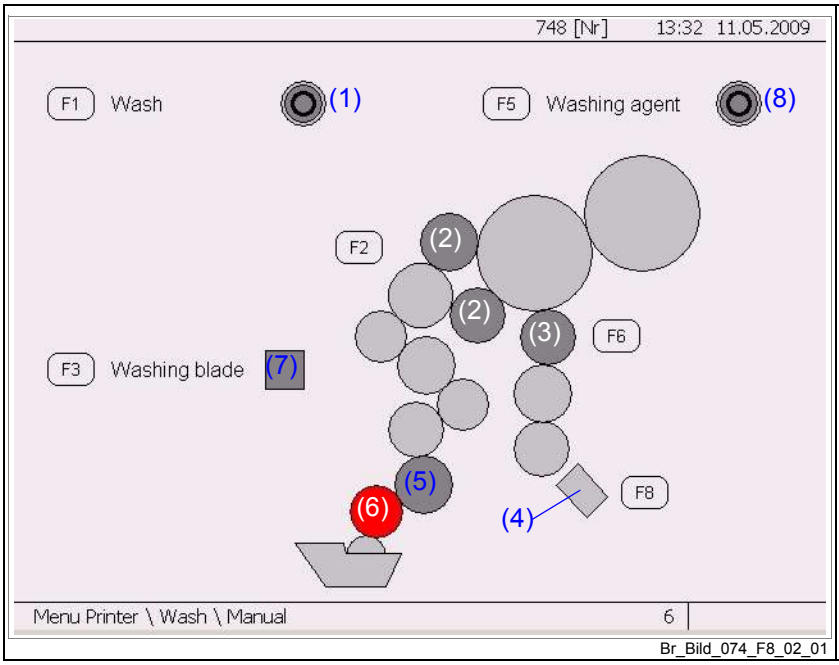

Br_Bild_074_F8_02_01

Function key	Function
F1 Wash	Wash printing couple (printing couple drive and ink fountain roller drive are switched on)
F2 Ink form rollers	Throw ink form roller ON/OFF plate cylinder
F3 Washing blade	Throw roller washing device ON/OFF oscillating drum(s)
F5 Washing agent	Switch spray device On/Off
F6 Dampening form roller	Throw dampening form roller ON/OFF plate cylinder
F8 Dampening unit	Switch spray dampening system On/Off

Variable	Meaning
(1)	Wash printing couple is: Off/On
(2)	Movement direction
(3)	Movement direction
(4)	Dampening unit is: Ready / Disabled / Active
(5)	Ink pickup roller is: Thrown OFF / Thrown ON
(6)	Ink fountain roller is: off / disabled / on
(7)	Washing blade is: Thrown OFF / Thrown ON
(8)	Washing agent is: Off/On

2.7.14 Menu Printer \ Inking unit

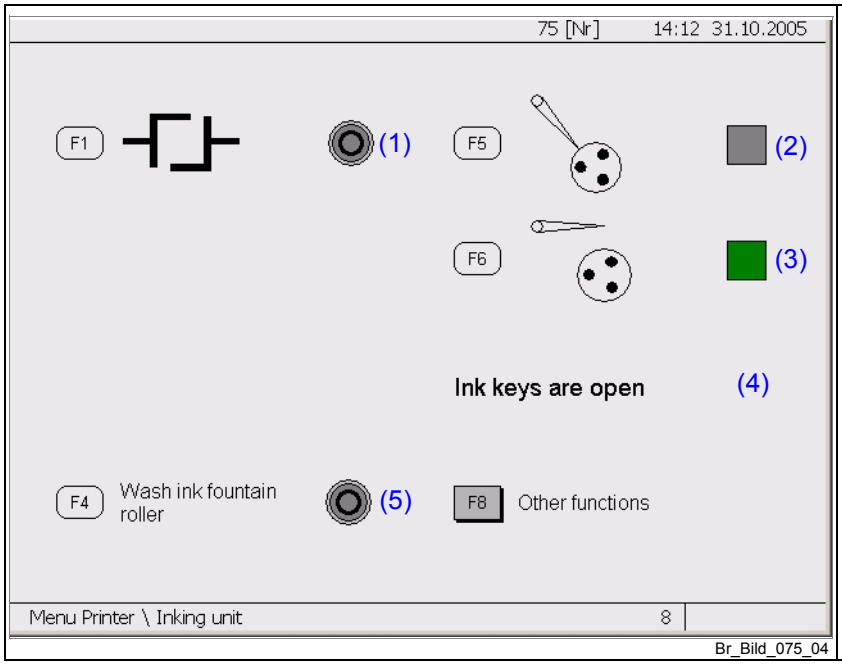

Function key	Function
F1 inking unit coupling	Engage/disengage clutch between reciprocator drive / oscillating drum and plate cylinder / blanket cylinder
F4 Wash ink fountain roller	Switch ink fountain roller maximum speed On/Off
F5 Ink knife bar throwON	Throw ink knife bar ON ink fountain roller in inching mode
F6 Ink knife bar throwOFF	Throw ink knife bar OFF ink fountain roller in inching mode
F8 Other functions	Change to mask

Variable		Meaning
(1)	○/●	Inking unit clutch is: Off/On
(2)	■/■	Ink knife bar is: thrown OFF / thrown ON (end position)
(3)	■/■	Ink knife bar is: thrown ON / thrown OFF (end position)
(4)	Message	Wait until ink keys are open! / Ink keys are open
(5)	●/○/●	Ink fountain roller is: Switched On / Switched Off / Disabled

2.7.15 Printer\Inking unit 2 menu

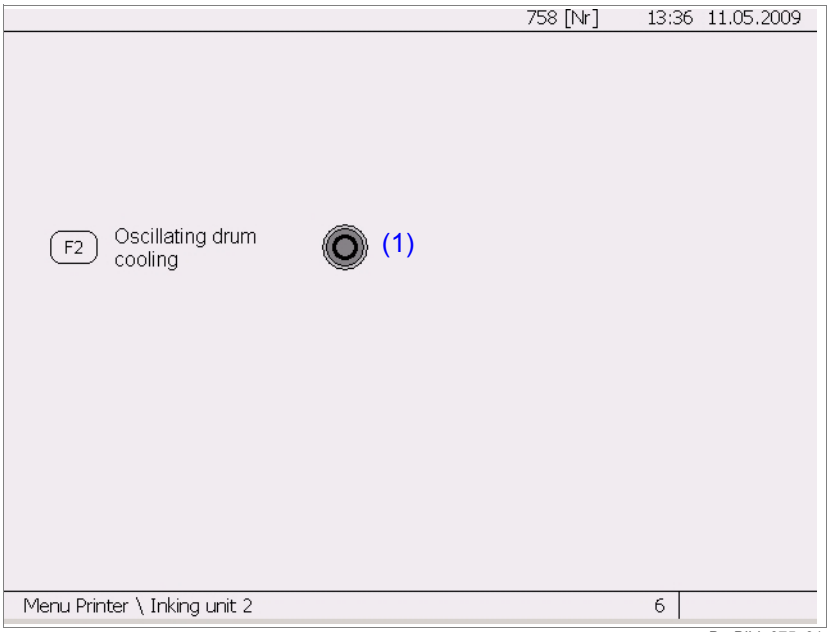

Br_Bild_075_01

Function key	Function
F2 Oscillating drum cooling	Switches on / off oscillating drum cooling water supply

Variable	Meaning
(1) /	Oscillating drum cooling is: On / Off

2.7.16 Menu Printer \ Blanket change

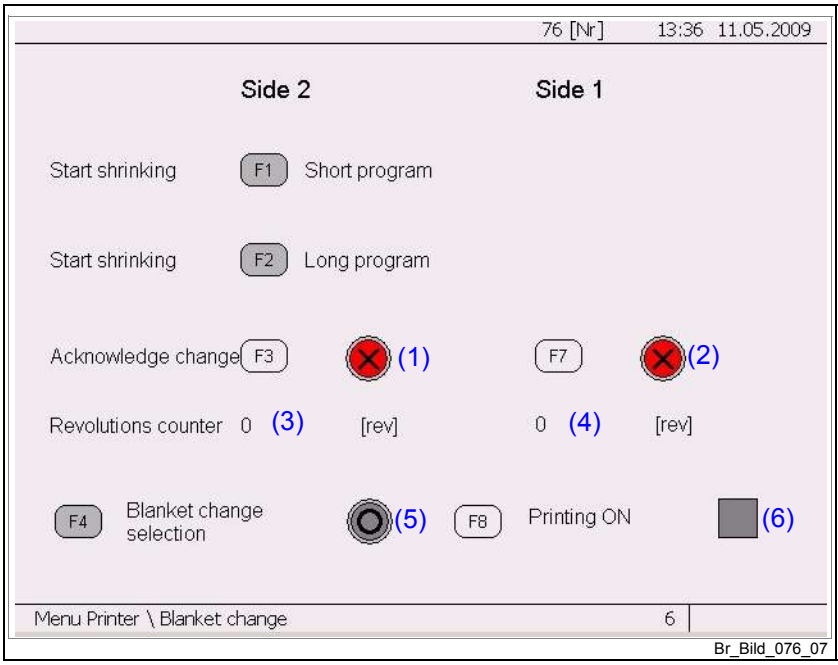

Br_Bild_076_07

Function key		Function
F1	Start shrinking Short program	Shrink rubber blanket 30 s at 1000 cyl/rev (factory setting)
F2	Start shrinking Long program	Shrink blanket 12 min at 10,000 cyl/rev (factory setting)
F3	Acknowledge change S 2	Reset revolutions counter (3) counter to rev 0
F4	Blanket change selec-tion	De-allocate printing couple dominant and disable all run com-mands except inch forward and back on the printing couple control panel
F7	Acknowledge change S 1	Reset revolutions counter (4) counter to rev 0
F8	Printing ON	Throw blanket cylinder ON/OFF blanket cylinder and plate cylinder

Variable		Meaning
(1)	✗ / ✓	Revolutions counter (1) not reset / reset S2
(2)	✗ / ✓	Revolutions counter (2) not reset / reset S 1
(3)	0…4294967295 [rev]	Number of revolutions of the blanket cylinder since the last blanket change S 2
(4)	0…4294967295 [rev]	Number of revolutions of the blanket cylinder since the last blanket change S 1
(5)	○ / ●	Select / deselect ink fountain roller
(6)	■ / ■	Blanket cylinder thrown OFF / ON

2.7.17 Menu\

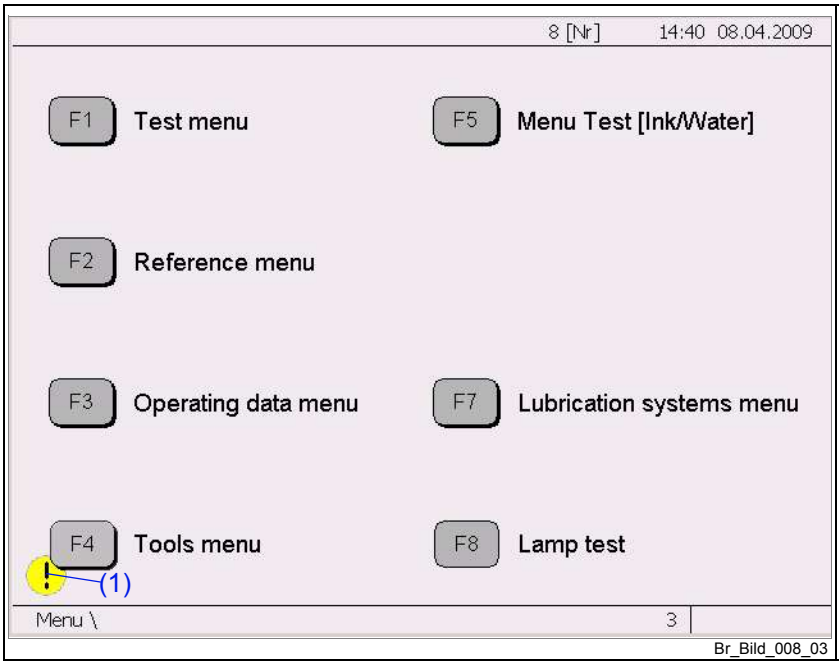

Br_Bild_008_03

Function key		Function
F1	Menu Test	Change to mask
F2	Menu Reference	Change to mask
F3	Menu Operating data	Change to mask
F4	Menu Tools	Change to mask
F5	Menu Test ink/water	Change to mask
F7	Menu Lubrication systems	Change to mask
F8	Lamp test	Test all lamps

Variable	Meaning
(1) !	Important error message from PMI display (more information in Menu Tools \ Error list)

2.7.18 Menu Test \

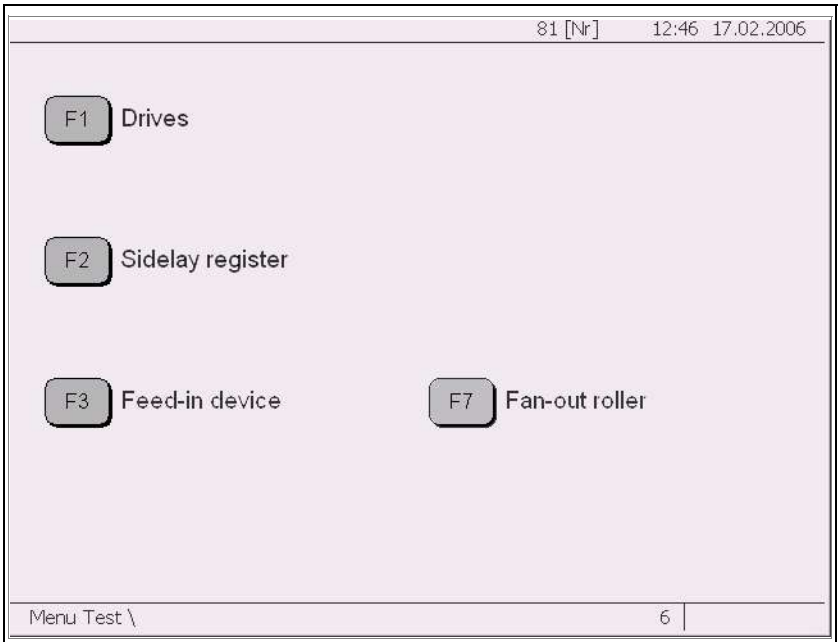

Br_Bild_081_20

Function key	Function
F1 Drives	Change to mask
F2 Sidelay register	Change to mask
F3 Feed-in device	Change to mask
F7 Fan-out roller	Change to mask

2.7.19 Menu Test \ Drives

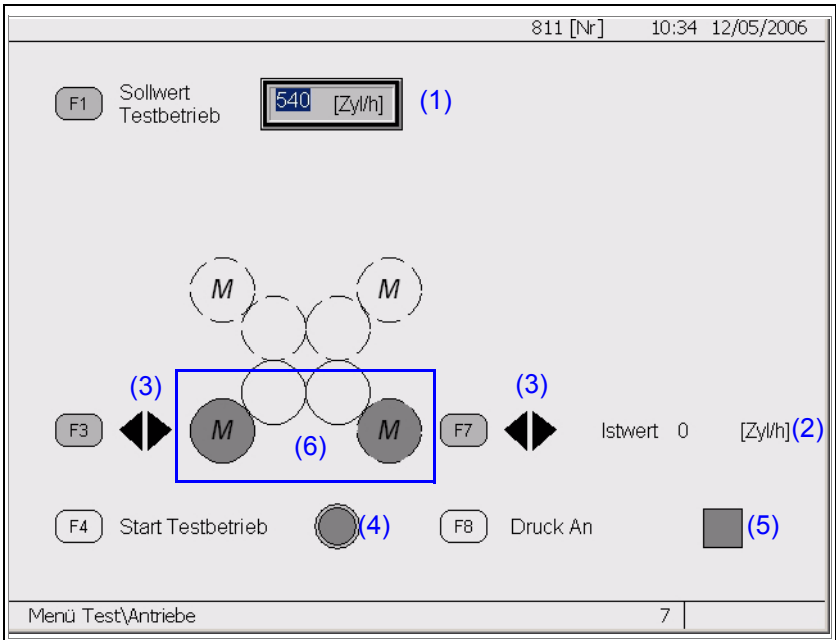

Br_Bild_081_F1_02

a Enter setpoint in the indicated range:
- Maximum & minimum value defined in window for each entry
- Entry using numeric keypad or *[+/-]* keys
- *[ESC]* Exit entry window.
- *[ENTER]* Confirm entry

Function key		Function
F1	Test run mode setpoint	Change speed for test run mode
F3	Printing couple	Allocate / de-allocate printing couple drive to/from test
F4	Start test run mode	Switch On/Off drives allocated to the test
F7	Printing couple	Allocate / de-allocate printing couple drive to/from test
F8	Printing ON	Throw blanket cylinder ON/OFF blanket cylinder and plate cylinder

Variable		Meaning
(1)	100…42000 [cyl./h]	Rpm setpoint test for allocated drives
(2)	0…42000 [cyl./h]	Current rpm of the printing couple drive
(3)	◀◀/◀▶	Drive allocation to test: allocated / de-allocated
(4)	●/●	Test run mode is: Off/On
(5)	■/■	Impression throw on is: OFF / ON
(6)	M/M/M/M	Drive is: ready / active and opposite drive is ready / active

2.7.20 Menu Test \ Sidelay register

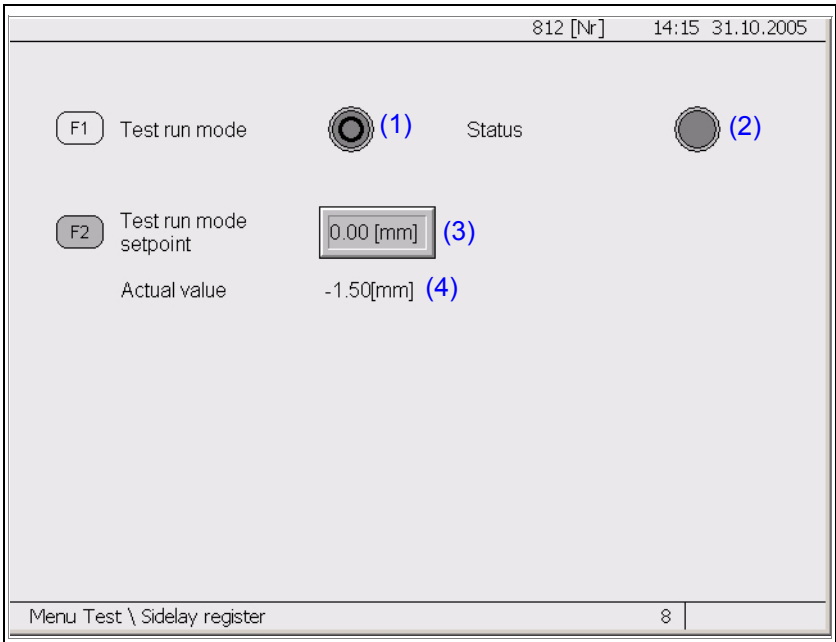

Br_Bild_081_F2_02

a Enter setpoint in the indicated range:
- Maximum & minimum value defined in window for each entry
- Entry using numeric keypad or *[+/-]* keys
- *[ESC]* Exit entry window.
- *[ENTER]* Confirm entry

Function key		Function
F1	Test run mode On/Off	Sidelay register adjustment test run mode On/Off
F2	Test run mode setpoint	Change setpoint position for the test run mode and adjust sidelay register to this position.

Variable		Meaning
(1)	O / I	Sidelay register test run mode is: Off/On
(2)	/ / /	Sidelay register adjustment is: Ready / Disabled / Active / Setpoint-actual difference
(3)	- 1.50...+ 1.50 [mm]	The test setpoint for position of the sidelay register
(4)	- 1.50...+ 1.50 [mm]	The actual position of sidelay register

Note

To avoid damaging the plate cylinder bearing, the sidelay register is only adjusted at a cylinder speed > 0 cyl.rev/h!

2.7.21 Menu Test \ Feed-in device

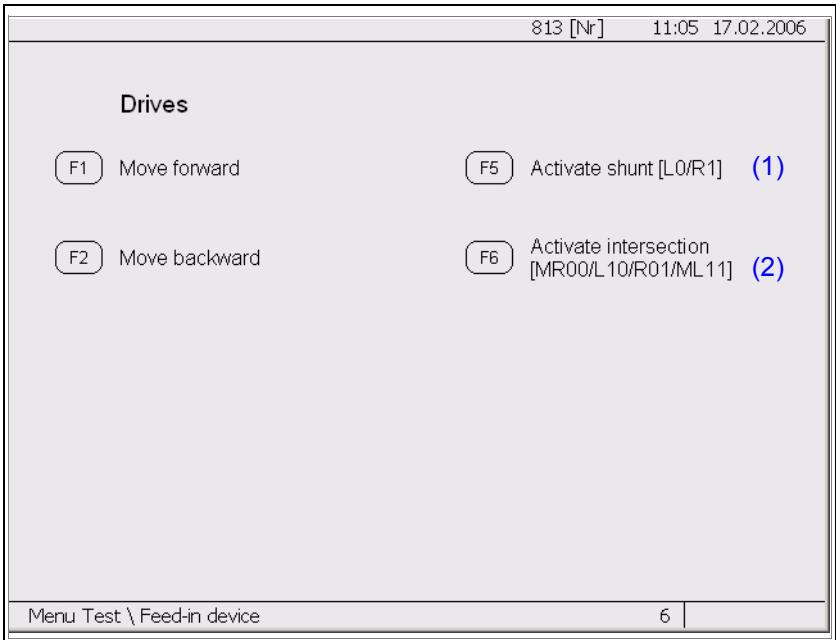

Br_Bild_081_F3_02

Function key	Function
F1 Inch forward	Inch forward feed-in chain
F2 Inch backward	Inch back feed-in chain
F5 Activate switches	Relocate crossing position
F6 Activate crossing	Relocate crossing position

Variable	Meaning
(1) L0 / R1	Switch in position L0/R1
(1) MR00/L10/R01/ML11	Crossing in position MR00/L10/R01/ML11

2.7.22 Menu Test \ Fan-out roller

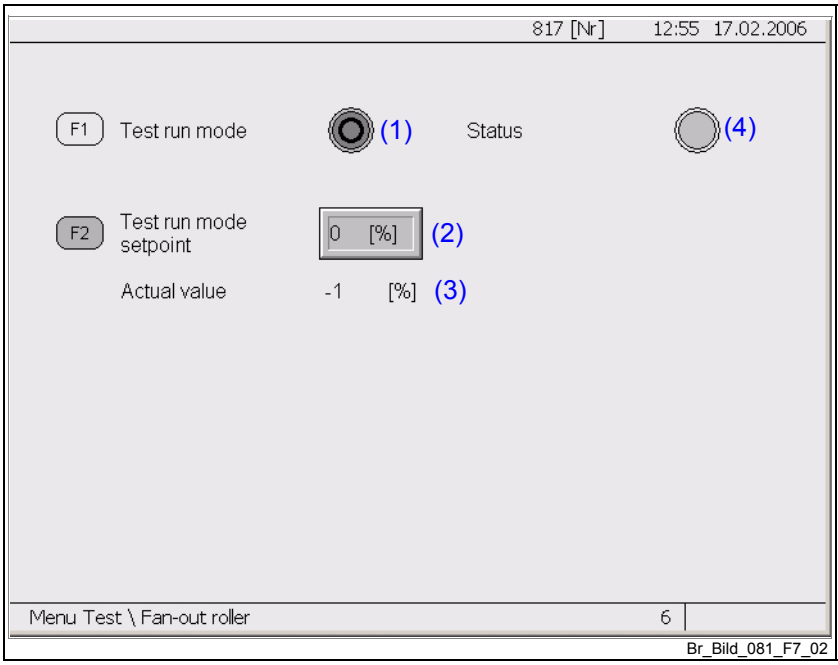

Br_Bild_081_F7_02

a Enter setpoint in the indicated range:
- Maximum & minimum value defined in window for each entry
- Entry using numeric keypad or *[+/-]* keys
- *[ESC]* Exit entry window.
- *[ENTER]* Confirm entry

Function key		Function
F1	Test run mode	Fan-out roller adjustment test run mode On/Off
F2	Test run mode setpoint	Change setpoint position for the test run mode and adjust fan-out roller on side 2 to this position.

Variable		Meaning
(1)	○/●	Test run mode fan-out roller adjustment is: Off/On
(2)	0…100 [%]	The test setpoint for position of the fan-out roller on side 2
(4)	0…100 [%]	Actual value / position of the fan-out roller
(5)	●/●/●/●	Fan-out roller adjustment is: Ready / Disabled / Active / Setpoint-actual difference

2.7.23 Menu Reference\

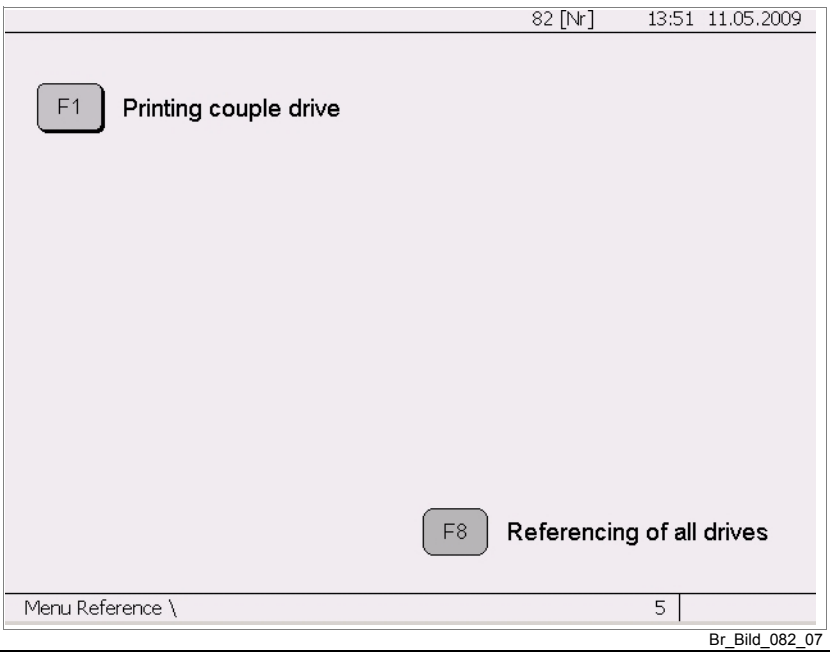

Br_Bild_082_07

Function key	Function
F1 Printing couple drive	Change to mask
F8 Referencing of all drives	Reference all drives

2.7.24 Menu Reference \ Printing couple drive

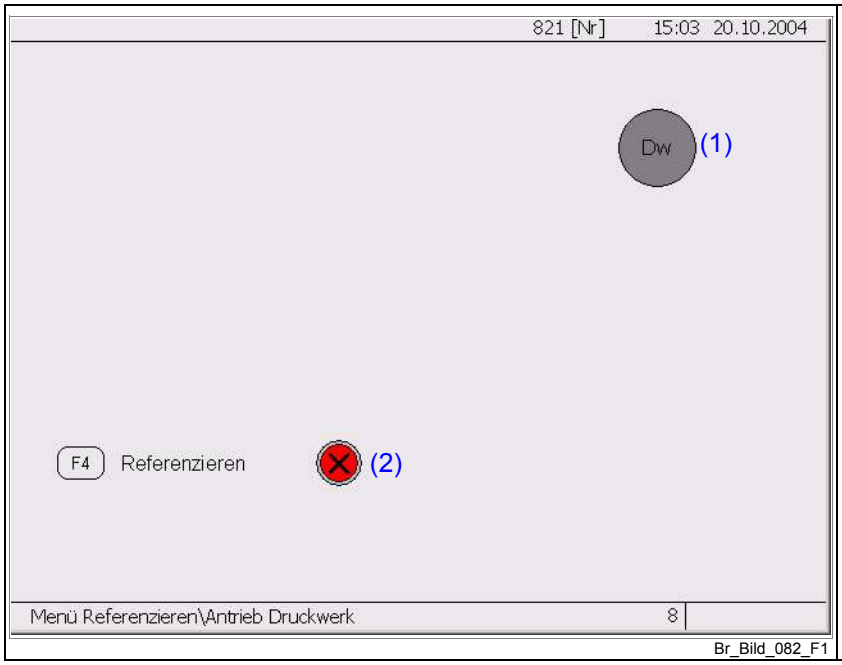

Function key	Function
F4 Reference	Reference printing couple drive (start reference run)

Variable	Meaning
(1) Dx / Dx	Printing couple drive is: ready / active
(2) ✗ / ✓	Printing couple drive is: not referenced / referenced

2.7.25 Menu Operating data \

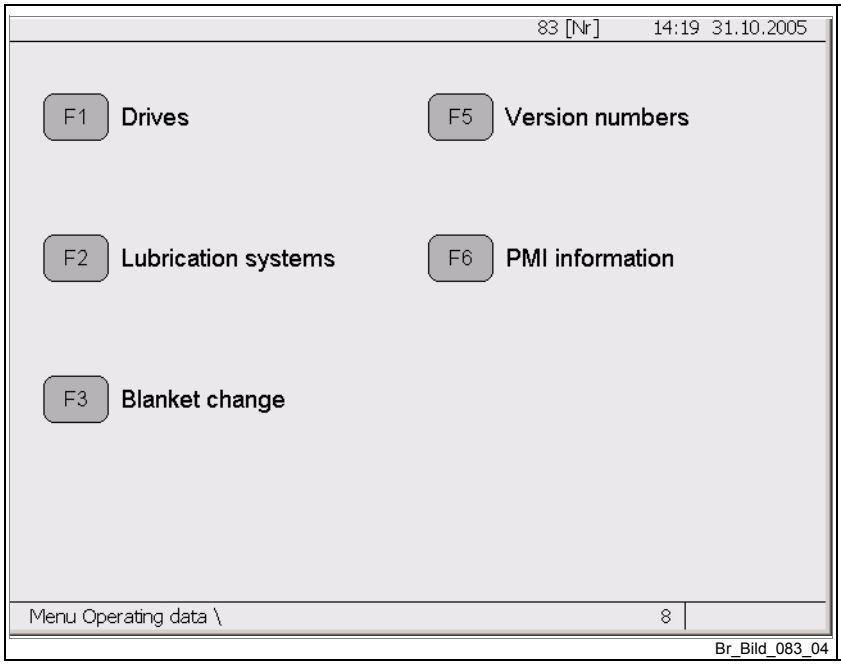

Function key	Function
F1 Drives	Change to mask
F2 Lubrication systems	Change to mask
F3 Blanket change	Change to mask
F5 Version numbers	Change to mask
F6 PMI information	Change to mask

2.7.26 Operating data / Drives menu

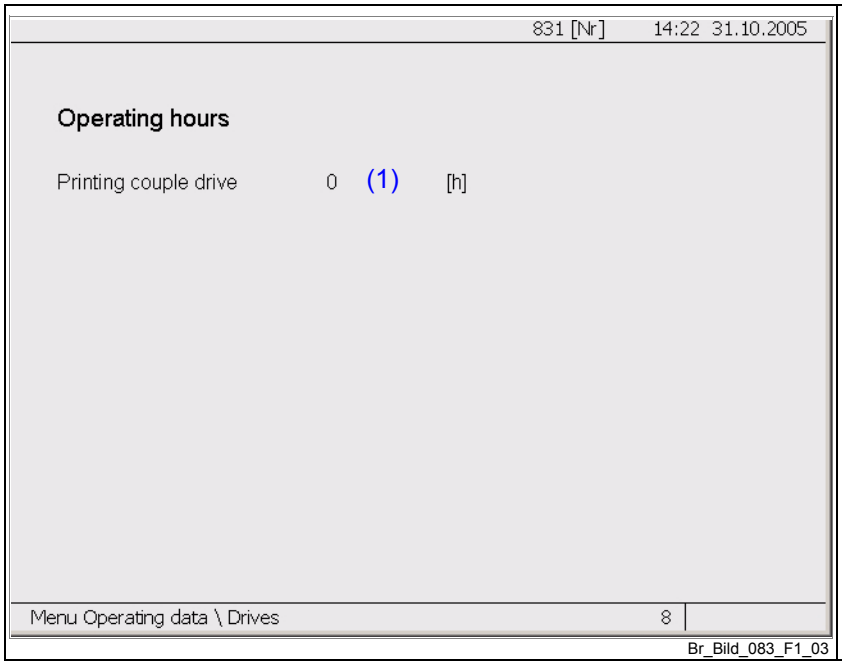

Variable	Meaning
(1) 0…4294967295 [h]	Printing couple drive operating hours

2.7.27 Menu Operating data \ Lubrication systems

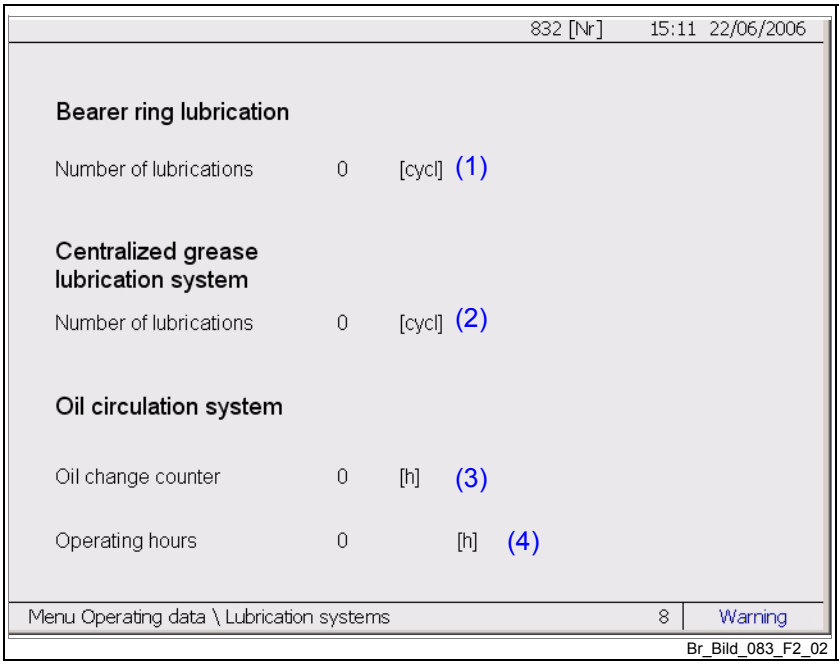

Variable		Meaning
(1)	0...65535 [cycles]	Counter for lubrication cycles for bearing ring lubrication
(2)	0...65535 [cycles]	Counter for lubrication cycles for centralized grease lubrication system
(3)	0…65535 [h]	Counter for oil changes for oil circulation lubrication system
(4)	0…4294967295 [h]	Counter for operating hours for oil circulation lubrication system

2.7.28 Menu Operating data \ Blanket

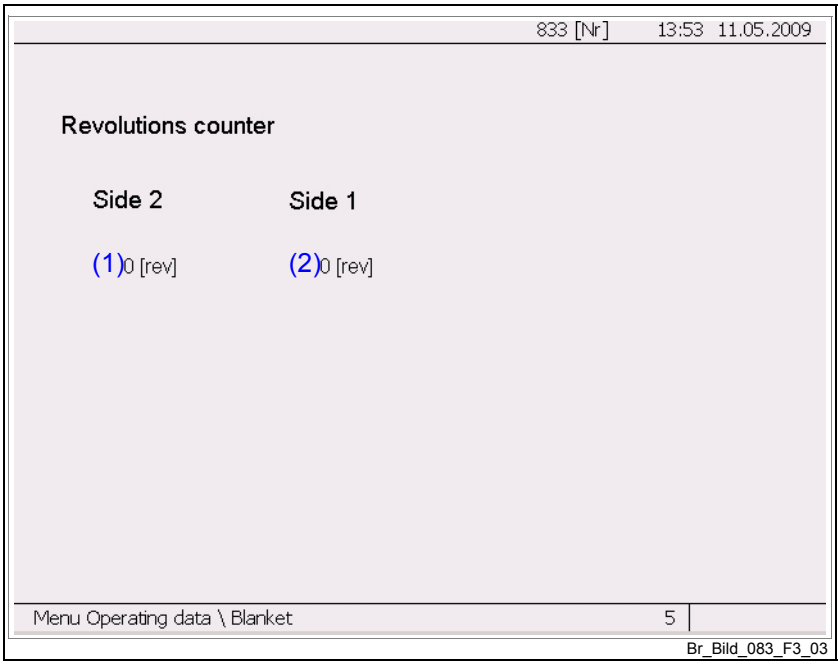

Variable		Meaning
(1)	0…4294967295 [h]	Number of revolutions after the last blanket change S 2
(2)	0…4294967295 [h]	Number of revolutions after the last blanket change S 1

2.7.29 Menu Operating data \ Version

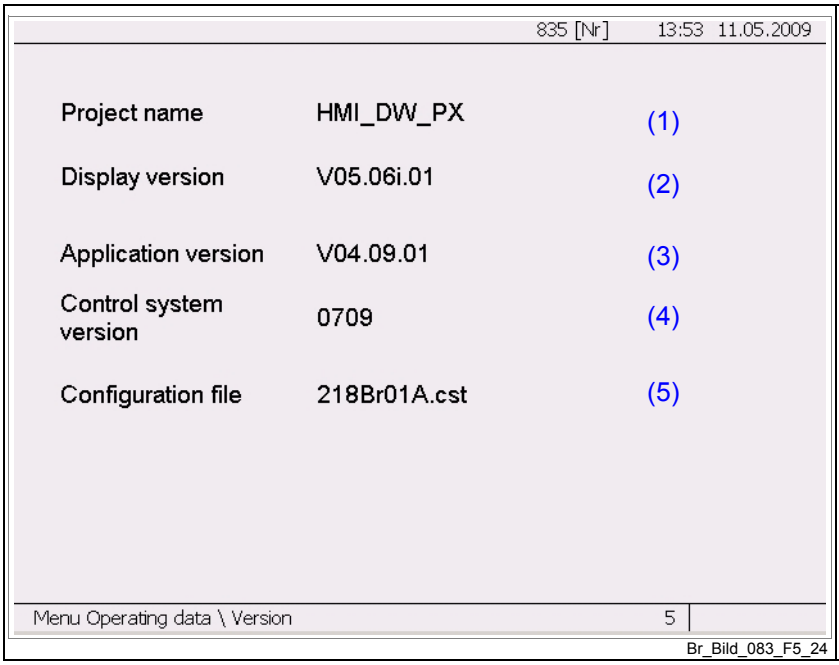

Variable		Meaning
(1)	HMI_DW_PX	Module project name
(2)	V05.06.00	Version numbers display
(3)	V04.09.00	Application software version numbers
(4)	0709	System version numbers
(5)	xxxBr01x.cst	Module configuration file

2.7.30 Operating data \ PMI information menu

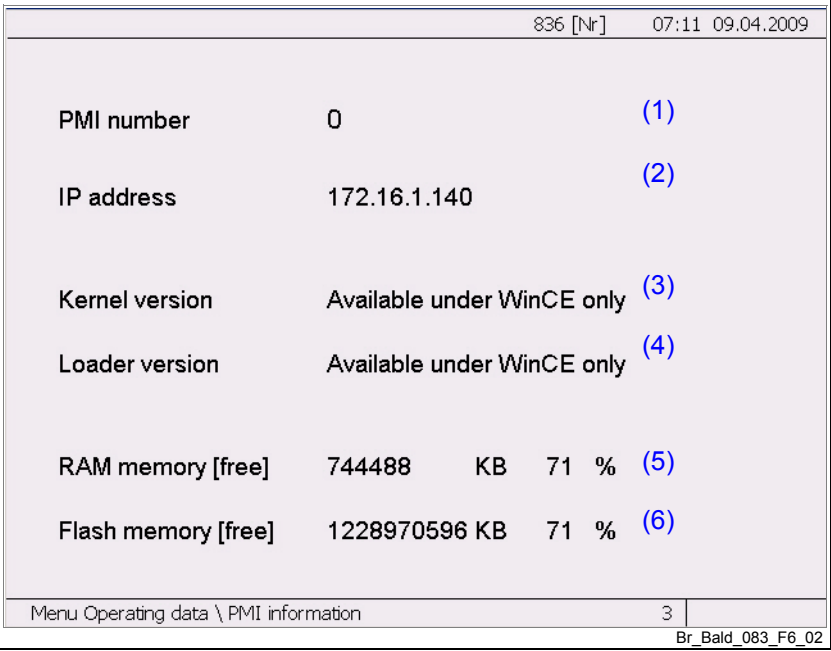

Variable		Meaning
(1)	0…xx	PMI number
(2)	172.xx.xx.xxx	PMI address
(3)	xxx	Kernel version
(4)	xxx	Loader version
(5)	0…4294967295 [KB] 0…100 [%]	Free RAM memory
(6)	0…4294967295 [KB] 0…100 [%]	Free Flash memory

2.7.31 Menu Tools \

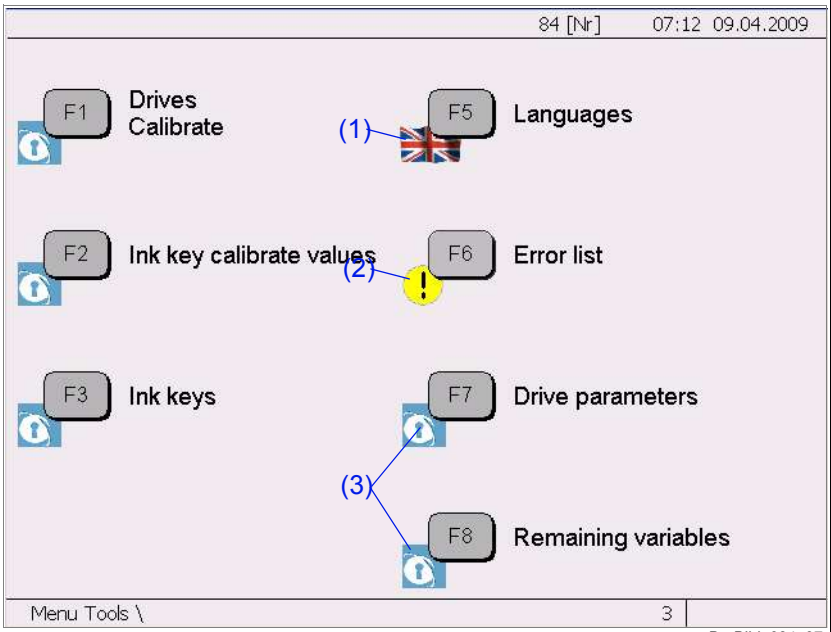

Br_Bild_084_07

Protected masks with password entry only for authorized users!

- User: = ???
- Password: = ???

For further information:
info@wifag.ch

Function key		Function
F1	Calibrate printing couple drive	Change to mask
F2	Calibration values Ink keys	Change to mask
F3	ink screws	Change to mask
F5	Language	Change to mask
F6	Error list	Change to mask
F7	Drive parameters	Change to mask
F8	Remaining variables	Change to mask

Variable		Meaning
(1)		Current language
(2)		Important error message from PMI display (more information in Menu Tools \ Error list)
(3)		Mask with password

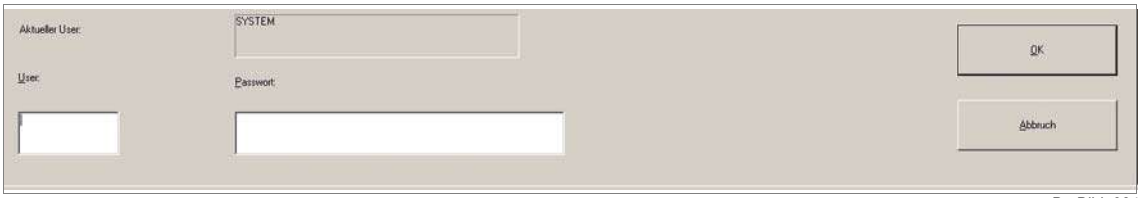

Br_Bild_084_F1

2.7.32 Menu Tools \ Calibrate printing couple drive

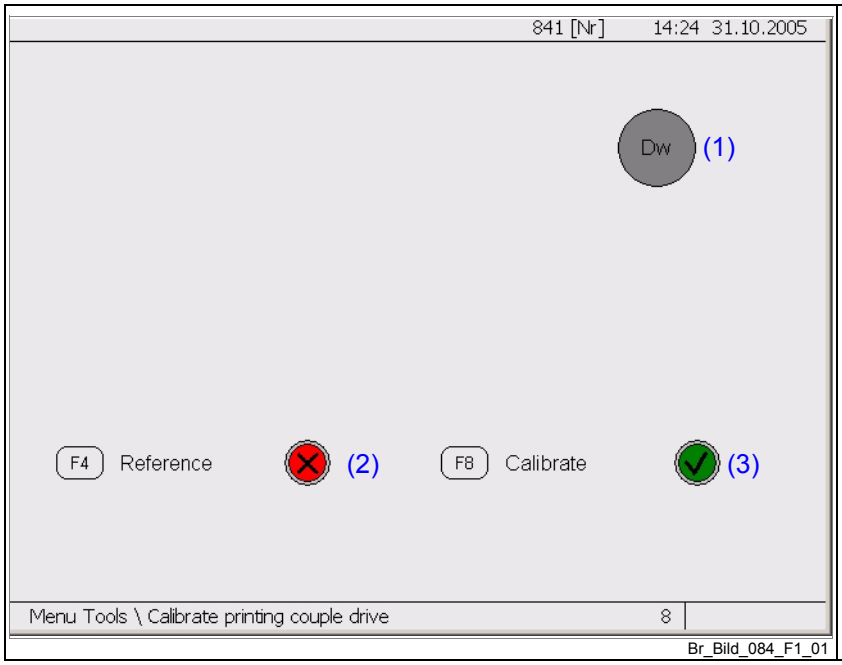

Function key	Function
F4 Reference	Reference printing couple drive (start reference run)
F8 Calibrate	Calibrate printing couple drive

Variable	Meaning
(1) Dx / Dx	Printing couple drive is: ready / active
(2) ✗ / ✓	Printing couple drive is: not referenced / referenced
(3) ✗ / ✓ / ●	Printing couple drive is: Not calibrated / Calibrated / Active

2.7.33 Menu Tools \ Ink key calibration values

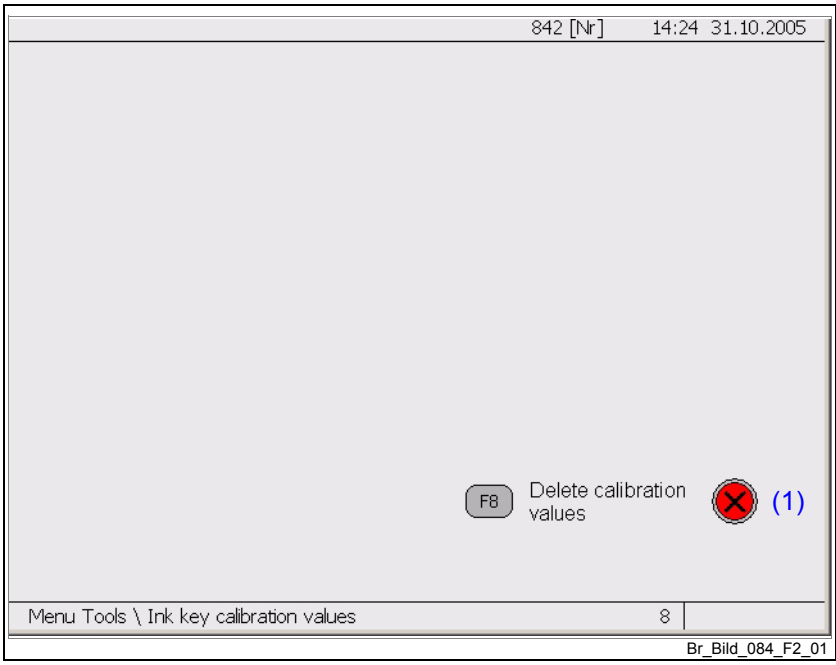

Function key	Function
F8 Delete calibration values	Calibration values deleted

Variable	Meaning
(1) /	Calibration values are: deleted / present

2.7.34 Menu Tools \ Adjustable ink keys

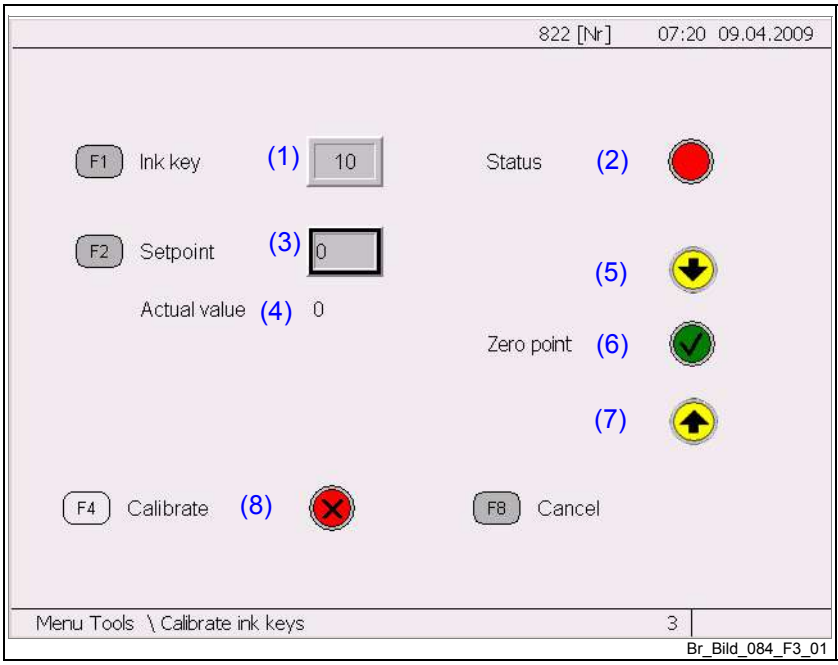

Br_Bild_084_F3_01

a Enter setpoint in the indicated range:
- Maximum & minimum value defined in window for each entry
- Entry using numeric keypad or *[+/-]* keys
- *[ESC]* Exit entry window.
- *[ENTER]* Confirm entry

b Cursor keys [∧∨]
Select printing couple upper / lower

Function key	Function
F1 Ink key	Select in individual ink key (1...XX) or test all ink keys together with value 0
F2 Setpoint	Change setpoint position for the test run mode and adjust ink key to this position
F8 Calibrate	Calibrate ink keys
F8 Cancel	Cancel calibration

Variable		Meaning
(1)	0…40	Current ink key in the test
(2)	/ /	Ink key is: ready / disabled / active / setpoint - actual difference
(3)	0…200	Setpoint for ink key adjustment
(4)	0…200	Actual position of ink key
(5)	/	Zero point is: not reached/too high
(6)	/	Zero point is: not reached / reached
(7)	/	Zero point is: not reached/too low
(8)	/ / / /	Ink key: moving downward/ moving upward / not calibrated / calibrated / active

2.7.35 Menu Tools \ Languages

Br_Bild_084_F5_04

Function key	Function
F1 German	Terminal masks in German
F2 English	Terminal masks in English
F3 French	Terminal masks in French
F4 Italian	Terminal masks in Italian
F5 Finnish	Terminal masks in Finnish
F6 Spanish	Terminal masks in Spanish
F7 Hungarian	Terminal masks in Hungarian
F8 Other languages	Change language 2 in mask

2.7.36 Menu Tools \ Languages 2

Function key	Function
F1 Czech	Terminal masks in Czech
F2 Ukrainian	Terminal masks in Ukrainian
F3 Hindu (English)	Terminal masks in Hindu
F4 Dutch	Terminal masks in Dutch
F5 Portuguese	Terminal masks in Portuguese
F6 Romanian	Terminal masks in Romanian

2.7.37 Menu Tools \ Error list

Br_Fig._084_F6_01

Note

Only messages from the PMI display are listed here.

Variable	Meaning
(1)	Error in error list is: error display / no error

2.7.38 Menu Tools \ Drive parameters

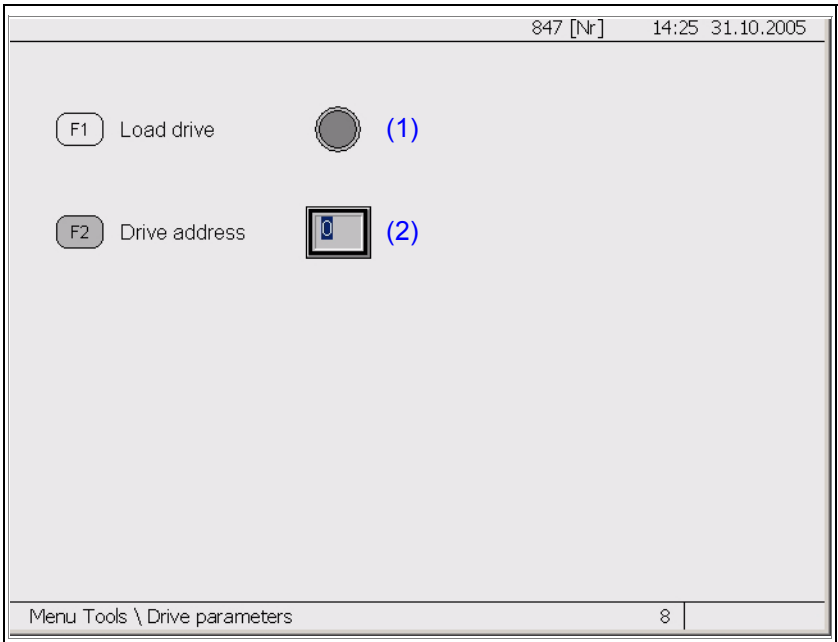

Br_Bild_084_F7

a Enter setpoint in the indicated range:
- Maximum & minimum value defined in window for each entry
- Entry using numeric keypad or *[+/-]* keys
- *[ESC]* Exit entry window.
- *[ENTER]* Confirm entry

Function key	Function
F1 Load drives	Load drives
F2 Drive address	Enter drive address

Variable		Meaning
(1)	●/●/✓/●	Load drive is: Disabled / Ready / Loaded / Active
(2)	0…33	Drive address

Note

The drive addresses can be found in *WIFAG electrical circuit diagrams B*!
For a KWD or KWF device both drives are re-loaded!
Loading takes place automatically by entering just one of the two addresses on the device!

2.7.39 Menu Tools \ Remaining variable

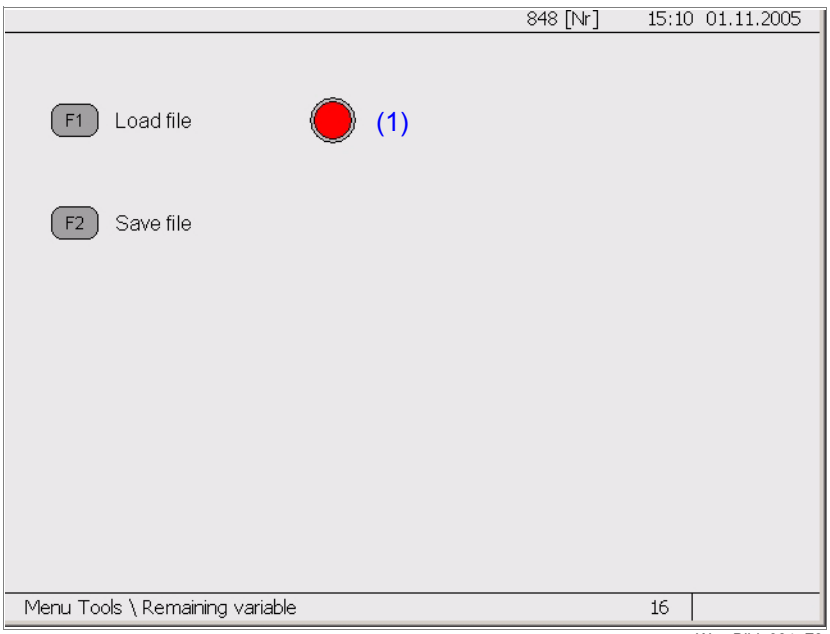

Wm_Bild_084_F8

Function key	Function
F1 Load file	Download file to the CAN card
F2 Save file	Save file on the SYMAC

Variable	Meaning
(1)	Load file is: Disabled / Ready / Loaded / Active

2.7.40 Menu Test \

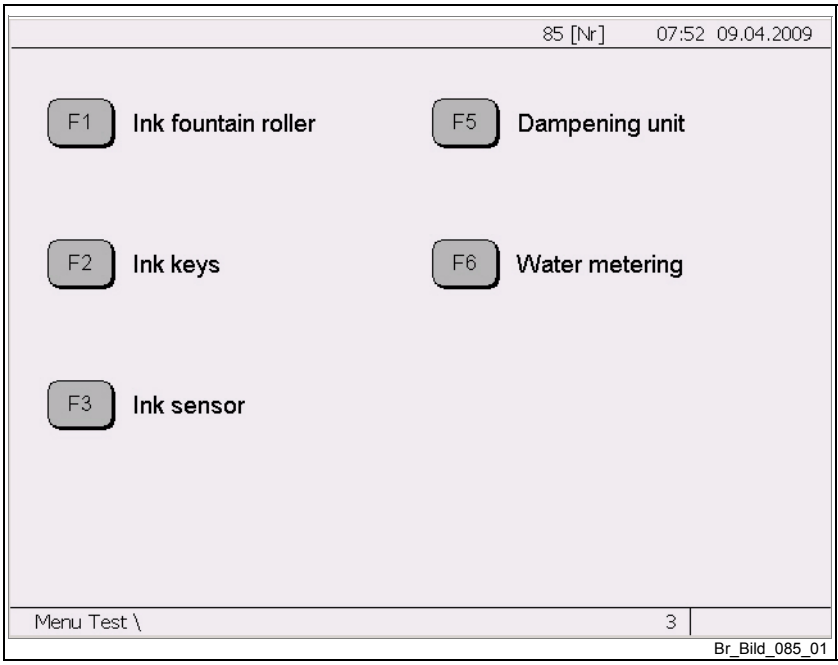

Br_Bild_085_01

Function key	Function
F1 Ink fountain roller	Change to mask
F2 ink screws	Change to mask
F3 Ink sensor	Change to mask
F5 Dampening unit	Change to mask
F6 Water metering	Change to mask

2.7.41 Menu Test \ Ink fountain roller

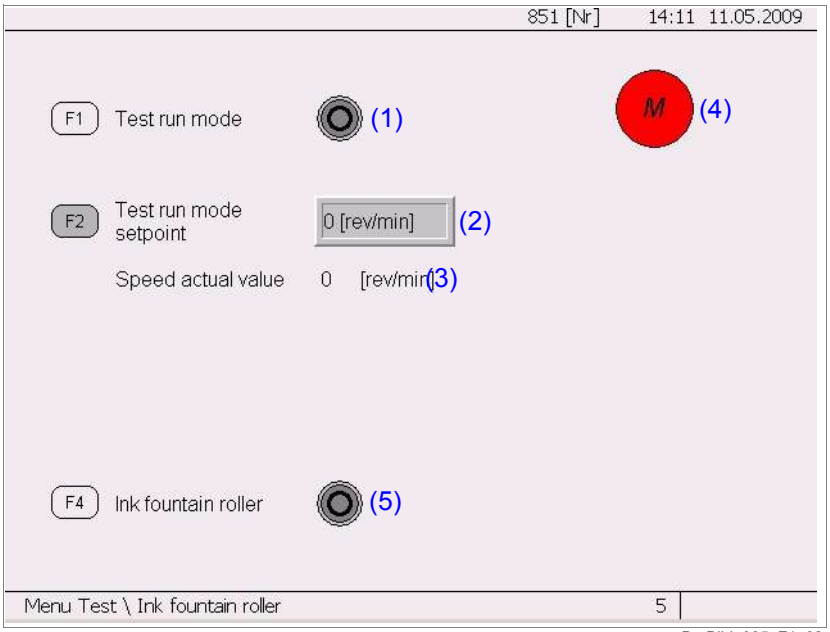

Br_Bild_085_F1_02

a Enter setpoint in the indicated range:
- Maximum & minimum value defined in window for each entry
- Entry using numeric keypad or *[+/-]* keys
- *[ESC]* Exit entry window.
- *[ENTER]* Confirm entry

Function key		Function
F1	Test run mode On/Off	Switch ink fountain roller drive test run mode On/Off
F2	Test run mode setpoint	Change speed for test run mode
F4	Ink fountain roller	Switch ink fountain roller drive with current rpm (specified by production) On/Off

Variable		Meaning
(1)	O / I	Test run mode is: Off/On
(2)	0…800 [rev./min]	The test setpoint for ink fountain roller drive
(3)	0…800 [rev./min]	Current speed of the ink fountain roller drive
(4)	O / I	Ink fountain roller drive is: Off/On
(5)	M / M / M	Ink fountain roller drive is: Ready / Disabled / Active

2.7.42 Menu Test \ Ink keys

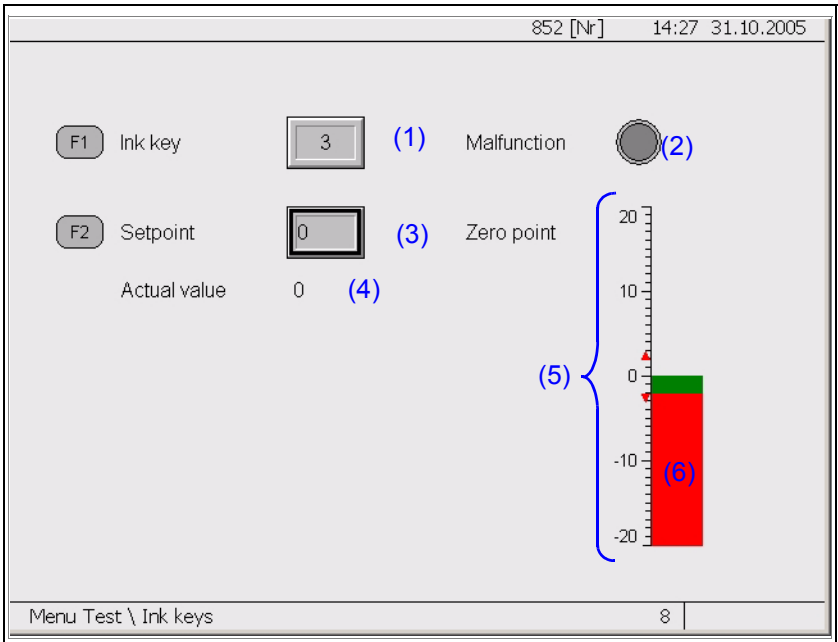

Br_Bild_085_F2_01

a Enter setpoint in the indicated range:
- Maximum & minimum value defined in window for each entry
- Entry using numeric keypad or *[+/-]* keys
- *[ESC]* Exit entry window.
- *[ENTER]* Confirm entry

Function key		Function
F1	Ink key	Select in individual ink key (1...40) or test all ink keys together with value 0
F2	Setpoint	Change setpoint position for the test run mode and adjust ink key to this position

Variable		Meaning
(1)	0…40	Current ink key in the test
(2)	/	Ink key is: Ready / Disabled
(3)	0…200	Setpoint for ink key adjustment
(4)	0…200	Actual position of ink key
(5)	- 20…+ 20	Actual position of ink key in zero setting and position of potentiometer (hardware zero position) in relation to controlled system (software zero position)
(6)	/	Zero position is ±20% / exceeded or fallen short

2.7.43 Menu Test \ Ink sensor

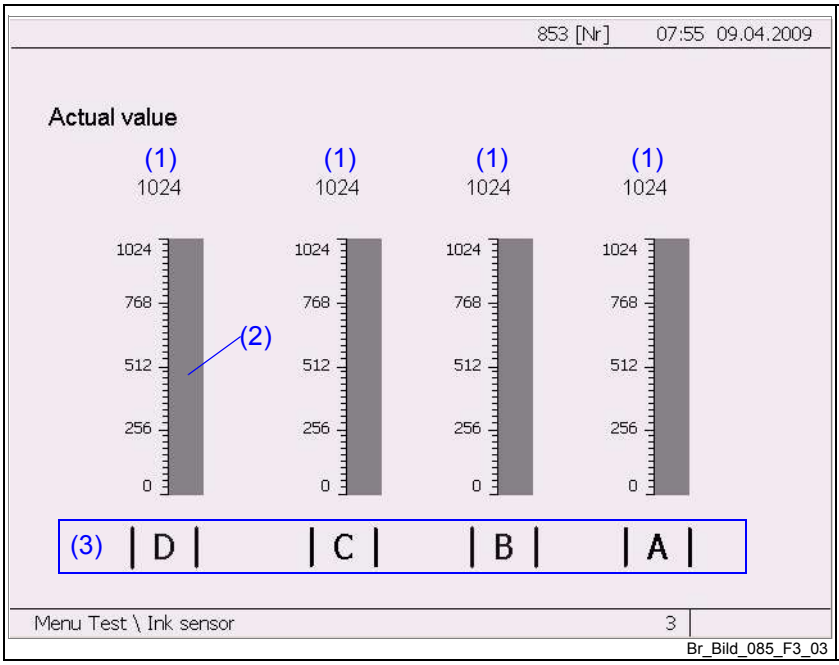

Variable		Meaning
(1)	0…1024	Actual value of ink level in the ink trough
(2)	↑ 0…1024	Actual value of ink level in the ink trough
(3)	Zone / A B C D (ri) Zone / D C B A (lf)	Ink sensor per zone and printing couple (inking unit - right/left)

2.7.44 Menu Test \ Dampening unit

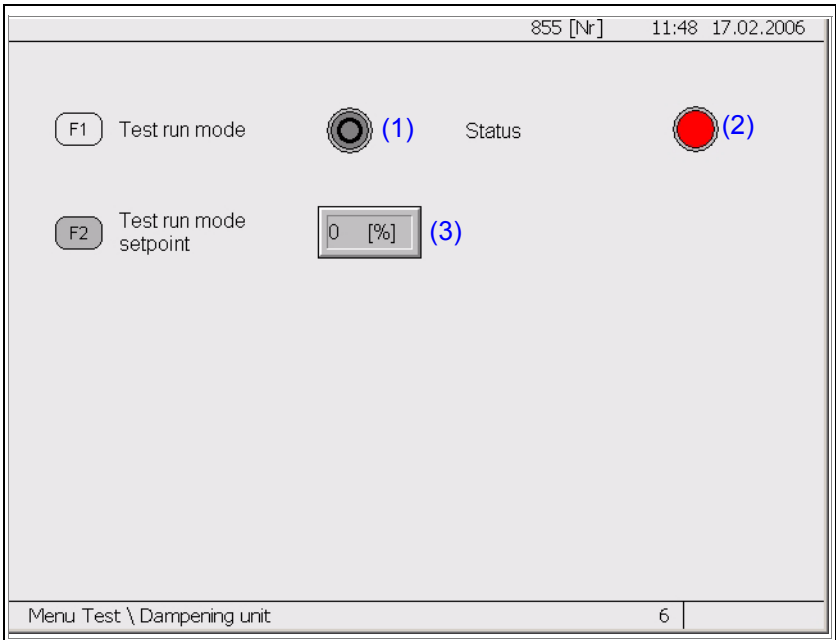

Br_Bild_085_F_015

a Enter setpoint in the indicated range:
- Maximum & minimum value defined in window for each entry
- Entry using numeric keypad or *[+/-]* keys
- *[ESC]* Exit entry window.
- *[ENTER]* Confirm entry

Function key		Function
F1	Test run mode On/Off	Switch spray dampening system On/Off (alternating)
F2	Test run mode setpoint	Change water metering for test run mode

Variable		Meaning
(1)	○ / ●	Spray dampening system is: Off/On
(2)	● / ● / ●	Dampening unit is: Ready / Disabled / Active
(3)	-100…100 [%]	Test setpoint

2.7.45 Menu Test \ Water metering

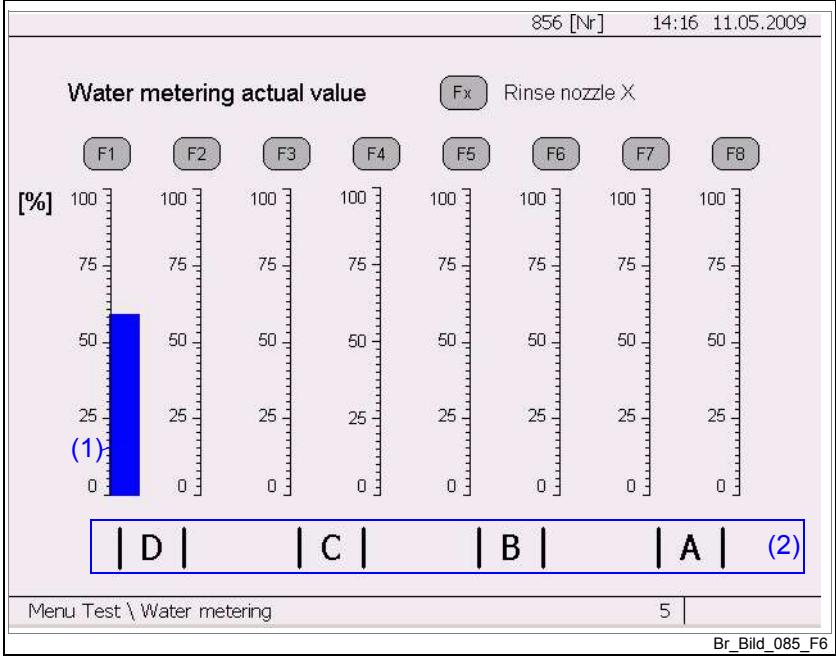

Br_Bild_085_F6

Function key		Function
F1 F2 F3 F4 F5 F6 F7 F8	Rinse nozzle	Rinse out corresponding nozzle in inching mode with maximum dampening solution feed

Variable		Meaning
(1)	↑ 0…100 [%]	Water metering actual value
(2)	Zone / A B C D (ri) Zone / D C B A (lf)	2 nozzles per zone and printing couple (inking unit - right / left)

2.7.46 Menu Lubrication systems \

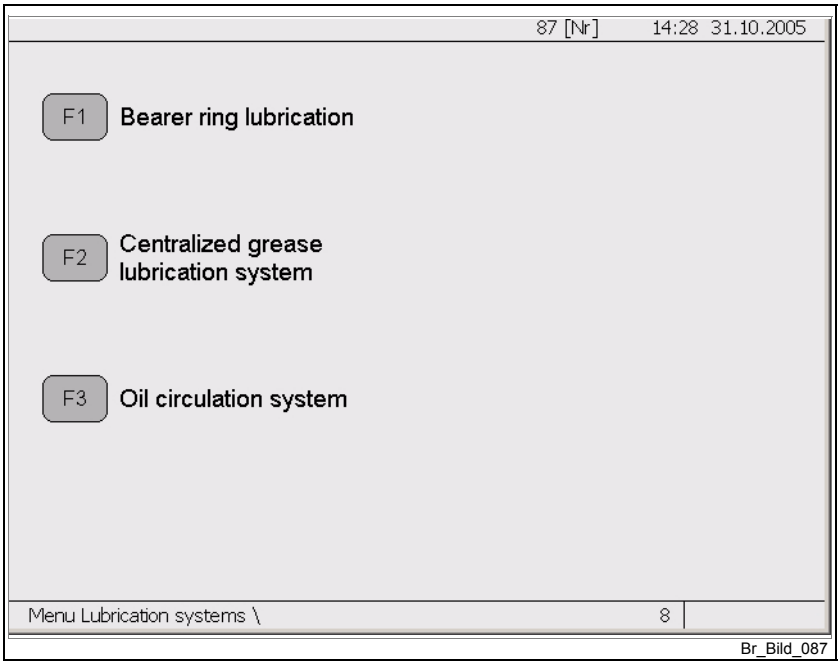

Function key	Function
F1 Bearer ring lubrication	Change to mask
F2 Centralized grease lubrication system	Change to mask
F3 Oil circulation system	Change to mask

2.7.47 Menu Lubrication systems \ Bearing ring lubrication

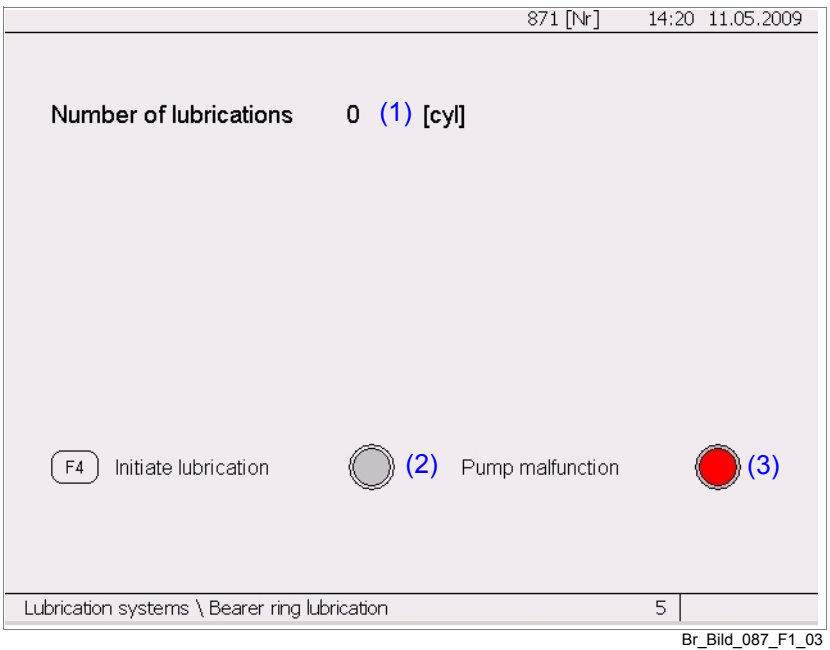

Br_Bild_087_F1_03

Function key	Function
F4 Initiate lubrication	Initiate lubrication cycle for bearer ring lubrication (switch on pump)

Variable		Meaning
(1)	0...65535 [cycles]	Counter for lubrication cycles
(2)	/	Lubrication cycle for bearer ring lubrication is: Off/On
(3)	/	Pump bearer ring lubrication is: Ready / Disabled

2.7.48 Menu Lubrication systems \ Centralized grease lubrication

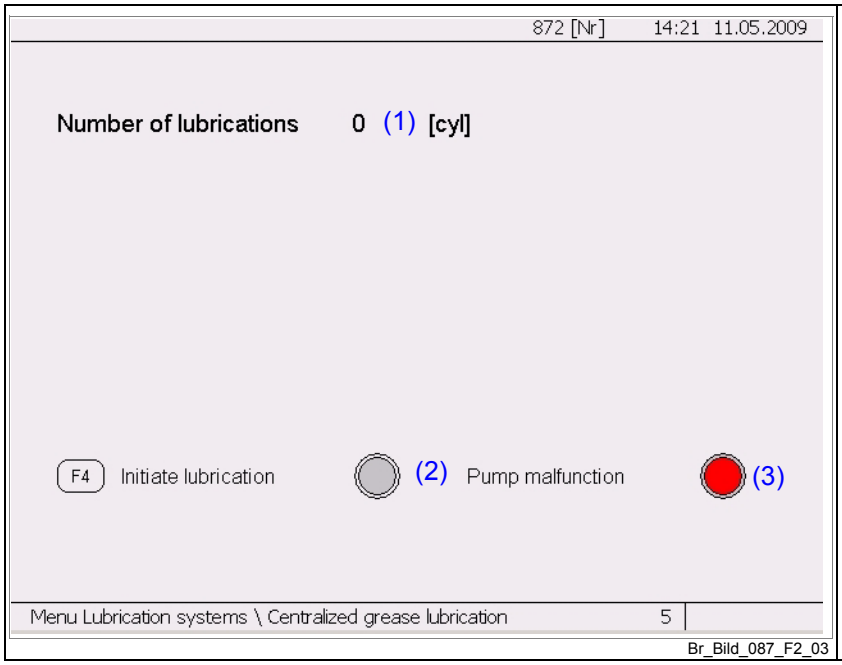

Function key	Function
F4 Initiate lubrication	Initiate lubrication cycle for centralized grease-lubrication (switch on pump)

Variable		Meaning
(1)	0...65535 [cycles]	Counter for lubrication cycles
(2)	/	Lubrication cycle for centralized grease-lubrication system is: Off/On
(3)	/	Pump for centralized grease-lubrication system is: Ready / Disabled

2.7.49 Menu Lubrication systems \ Oil circulation lubrication

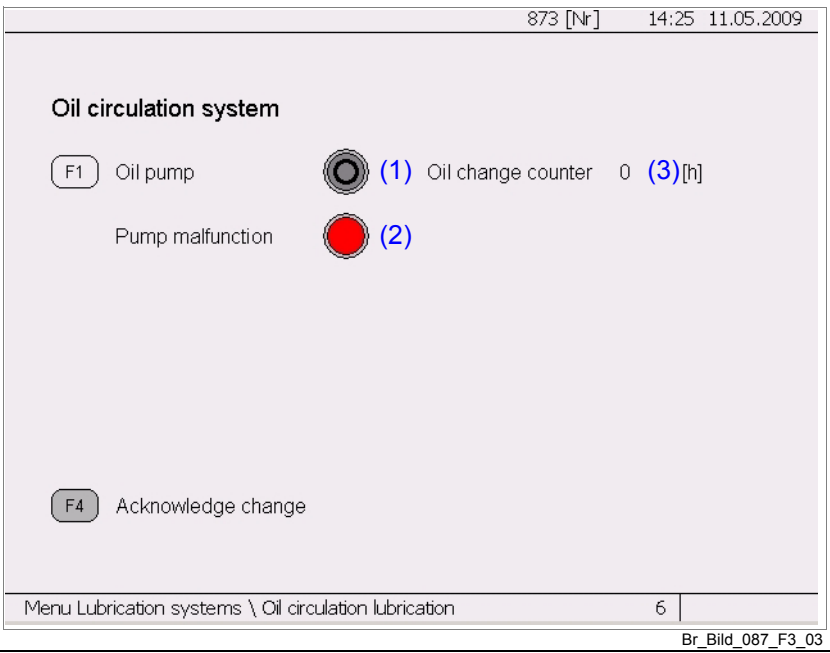

Br_Bild_087_F3_03

Function key	Function
F1 Oil pump	Switch oil pump On/Off
F4 Acknowledge change	Reset counter after oil change to 0

Variable		Meaning
(1)	○ / I	Oil circulation lubrication system is: Off/On
(2)	● / ●	Pump is: Ready / Disabled
(3)	0…65535 [h]	Hours counter after last oil change

2.7.50 Fault messages \

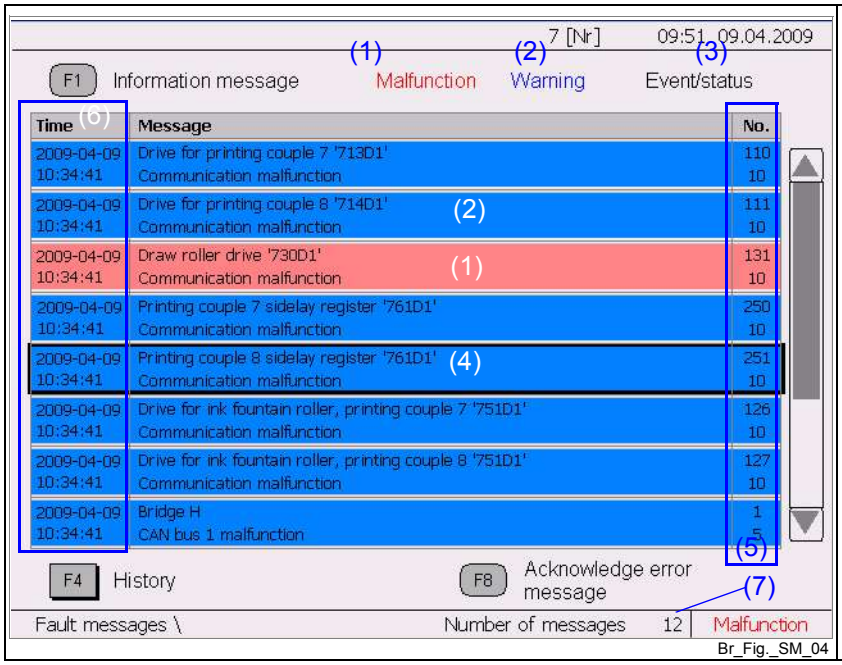

Function key		Function
Esc	ESC *	Exit mask, return to previous mask
F1	Information message	Display explanation for fault message
F4	History	Call up History (event list) mask
F8	Acknowledge	Acknowledge all fault messages

Variable		Meaning
(1)	**Malfunction**	Cause of fault / stop (red)
(2)	**Warning**	Only warning, irrelevant fault (blue)
(3)	**Event/status**	Event or message status no fault (gray)
(4)		Selected message (color with black border) *1)
(5)	XXX XXX	• Message No. = location • Message No. = text
(6)	2007.10.11 21:12:21	• Time = date • Time = in hours, minutes and seconds
(7)	XXXX	Number of messages

*1) Select page with **[Page UP / Page Down]** keys and lines with cursor keys (arrow keys). Then use the **[F1]** key to call up the information message for the selected fault message.

2.7.51 Information message

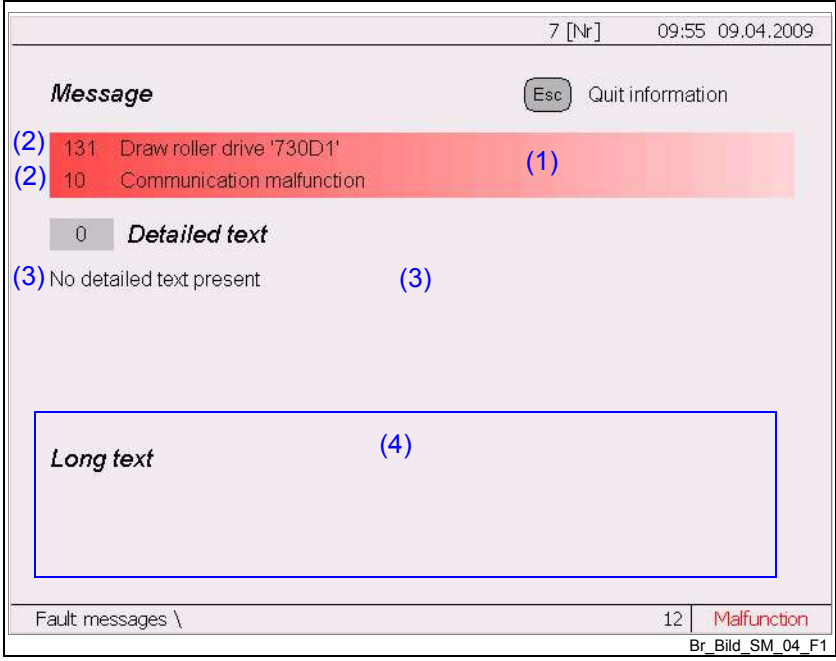

Function key	Function
Esc ESC *	Exit mask, return to fault messages

Variable		Meaning
(1)	**Message**	Text of message (background according to type of message: red, blue, gray)
2)	XXX XXX	• Message No. = location • Message No. = text
(3)	**Detailed text** XXXX	• Message explanation • Information no. The detailed text contains additional information for localization and allocation of concerned elements. For example, 9023 ⇨ ink key no. 23 (counted from the first ink key in zone A) caused fault
(4)	**Additional text**	Possible causes

2.7.52 Fault messages\history

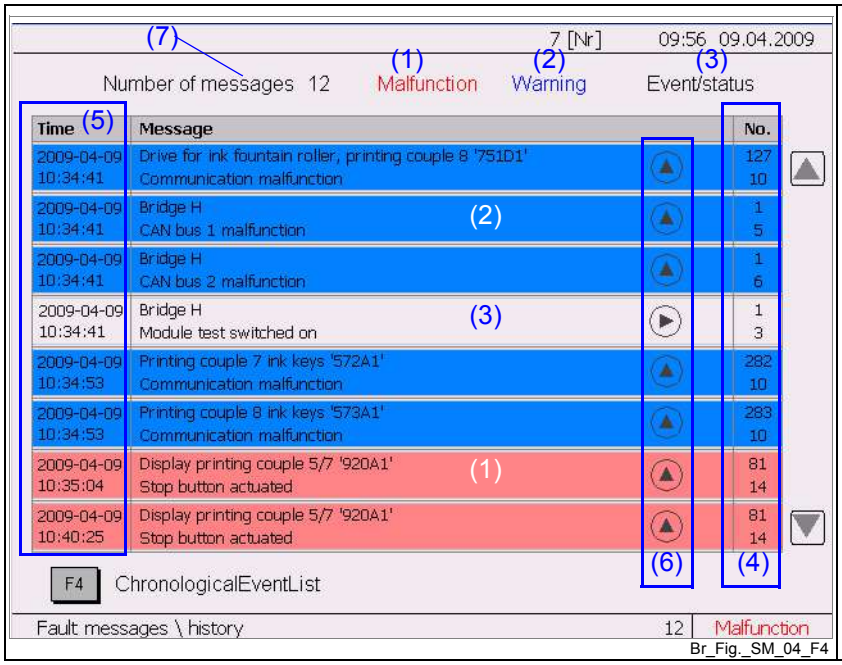

Br_Fig._SM_04_F4

Function key		Function
Esc	ESC *	Exits mask, returns to fault message
F4	Chronological event list	Change to mask

Variable		Meaning
(1)	**Malfunction**	Cause of fault / stop (red)
(2)	**Warning**	Warning is: irrelevant fault (blue)
(3)	**Event/status**	Event or message status no fault (gray)
(1)(2)(3)	**fault / warning/ event /status**	Messages sent (no color)
(4)	XXX XXX	• Message No. = location • Message No. = text
(5)	2007.10.11 21:12:21	• Time = date • Time = in hours, minutes and seconds
(6)	▲/▼/▶	The message is: on / sent / status changed
(7)	XXXX	Number of messages

2.7.53 Fault messages\history\chronological list of events

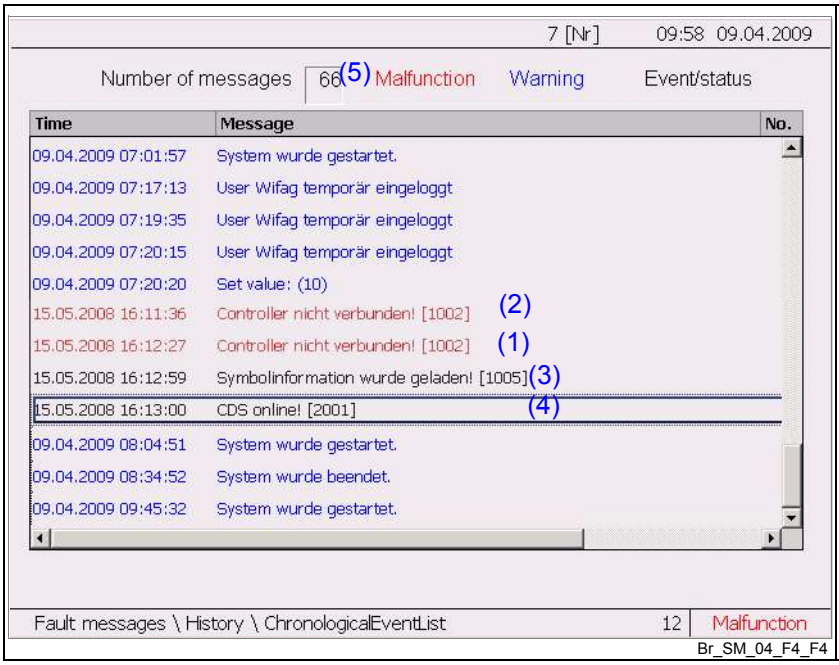

Function key	Function
Esc ESC *	Exit mask, return to fault messages

Variable	Meaning
(1) Malfunction	Cause of fault / stop (red)
(2) Warning	Only warning, irrelevant fault (blue)
(3) Event/status	Event or message status no fault (black)
(4) Text	Selected message (with blue border)
(5) XXXX	Number of messages

2.8 Install terminal software

Note

See Chapt. 3.5 Terminal in Reg. 11 Electrical setting and commissioning instructions in the *System* file.

3 Indicators and warning devices

Note

The meaning of continuously lit or flashing signal lamps or LEDs integrated in the pushbuttons is indicated in the description of the respective pushbutton. Further information is available in Chapt. 2.5 Overview of pushbuttons and commands.
The display elements show the status of the system or specific function groups. In the light test, all signal and warning lights light up continuously.

Tab. 5 Safety-relevant indicators and warning devices

Name	Appearance	Installation location	Display
warning lamp	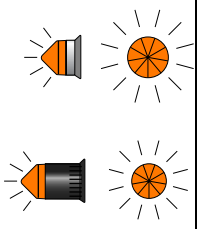 (orange)	Dérouleur Printing unit Angle-bar module Folder-midsection Folder-superstructure Folder Portable terminal	**Flashes slowly (all system parts):** • When the system is to be run in a few seconds in isolated or interconnected mode. **Flashes slowly (autopaster):** • When the system is to be run in a few seconds in isolated or interconnected mode. • When a local movement is performed (e.g. moving support arm). **Flashes rapidly (autopaster):** • Flashes (0.3 s on / 0.3 s off) if it is no longer permitted to enter the protected zone because an automated process is about to begin! (E.g. pasting) **Note:** If the hooter sounds at the same speed, it is then necessary to perform an action immediately. (For example, leave the protection zone immediately and press the *RESET* pushbutton to reset entry protection.). See hooter for details. **Warning:** If not all prerequisites are met when an automatic process is about to begin, a machine stop occurs! If necessary, call up fault messages on the terminal. **Lights continuously (all system parts):** • During the enabling time and warning-free enabling time of all run commands of paper guide drives.

Tab. 5 (Cont. Tab.) Safety-relevant indicators and warning devices

Name	Appearance	Installation location	Display
klaxon	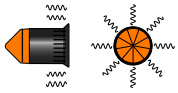 (black)	Dérouleur Printing unit Angle-bar module Folder-superstructure Folder-midsection Folder	**Sounds (all system parts):** • When the system part is to be operated in a few seconds. **Exception:** On the printing unit the commands *INSERT PLATES* and *LIFT OUT PLATES* do not trigger the hooter. **Sounds in rapid succession (autopaster):** • Sounds (0.3 sec. on / 0.3 sec. off) if an action needs to be performed immediately because an automated process (e.g. pasting) is about to begin and not all prerequisites have been met! (For example, leave the protection zone immediately and press the *RESET* pushbutton to reset access protection.) **Caution**: If not all prerequisites are met when an automatic process is about to begin, a machine stop occurs! If necessary, call up fault messages on the terminal. **Exceptions**: Run commands that have an effect on only one single autopaster and are self-actuated on it display only a visual warning (see “Warning lamp”).

4 Malfunction indicators

Malfunctions are indicated on the following control elements:

- Terminal (Chapt. 2.6 Design and operation of the terminals)
- Control desk in the control console

4 operation

1 General safety information 4.3

2 Operating modes 4.4
2.1 Restrictions due to opened guards 4.4
2.2 Combined mode 4.5
2.3 Isolated mode 4.6
2.4 Makeready mode 4.7
2.5 Test mode 4.8

3 Allocation and de-allocate function groups 4.9

4 ink supply 4.10
4.1 Installing the portable ink fountain 4.10

5 Ink knife bar 4.12
5.1 Swing out ink knife bar 4.12
5.2 Insert ink separators 4.13

6 Plate cylinder 4.15
6.1 Manually insert and lift out printing plates 4.15
6.2 Printing with reduced web widths 4.17

1 General safety information

DANGER	**Danger!** **Residual dangers** and danger zones on the system! => Read the warning notices and act accordingly. => Read the index *Important for your safety*.
DANGER	**Risk of lethal injury!** **Operation** of the function, interconnection or production group by others! => Before entering each command, make certain that nobody is in the danger zone. => When the hooters sound, immediately leave the danger zone of moving parts.
WARNING	**Risk of injury!** **Hearing damage** may occur at noise levels over 90 dB(A)! => You must wear hearing protection when in the machine room during production.
CAUTION	**Machine damage!** **Damage** to machine parts due to operating errors! => Read the instructions and act accordingly. => Before entering each command, make certain that there are no loose objects in the system.

2 Operating modes

Contents

This chapter contains the following information:

- Chapt. 2.1 Restrictions due to opened guards
- Chapt. 2.2 Combined mode
- Chapt. 2.3 Isolated mode
- Chapt. 2.4 Makeready mode
- Chapt. 2.5 Test mode

2.1 Restrictions due to opened guards

Dangerous run commands are blocked by opened (monitored) guards. A distinction is made whether guards are open in one or in several safety sectors (Tab. 1).

Note

Information about the safety sectors is in Chapt. 2 Safety sectors in Reg. 2 Important for your safety.

Tab. 1 Restrictions due to opened guards

Original position	Effects
The printing couple and/or the interconnected group turns and a monitored guard is opened.	• *SAFE-STOP* is triggered • Printing couple or combined group is run down • Run commands (all drives and actuators) on all control devices of the printing couple or of the entire combined group are disabled
The printing couple and/or interconnected group is at standstill and one or more monitored guards are opened in **one** safety sector of the printing couple or of the whole interconnected group.	• The printing couple can now only be run with the commands *INSERT PLATES* and *LIFT OUT PLATES* in makeready mode
The printing couple and/or interconnected group is at standstill and one or more monitored guards are opened in **multiple** safety sectors of the printing couple or of the whole interconnected group.	• Run commands (all drives and actuators) on all control devices of the printing couple or of the entire combined group are disabled

2.2 Combined mode

Requirements

- Operating mode switch on position *OPERATION*
- Printing unit of the web and production allocated

Basic function

In combined group mode the entire combined group can be run from a single control device.

Tab. 2 Run commands in combined group mode

Control device	**Run commands**							
	REFERENCE	*INSERT PLATES*	*LIFT OUT PLATES*	*FEED IN*	*WASH*	*PRE-INKING*	*FASTER*	*SHRINK BLANKET*
central control console	●			●	●	●	●	
Terminal	● 1)			●	● 1)	● 1)	●	● 2)
Printing couple control panel		**x**	**x**					
Portable terminal		**x**	**x**					

● = enabled run commands
x = disabled run commands
1) = while running, the printing couple is dominantly de-allocated
2) = while running, both printing couples of the bridge are dominantly de-allocated (only for rubber-rubber printing couples)

2.3 Isolated mode

Requirements

- Operating mode switch on position *OPERATION*
- Printing unit de-allocated from the production and web

Basic function

In isolated mode, only the corresponding printing couple can be run and this only from a control device from which good visibility is guaranteed.

Tab. 3 Run commands in isolated mode

	Run commands							
Control device	*REFERENCE*	*INSERT PLATES*	*LIFT OUT PLATES*	*FEED IN*	*WASH*	*PRE-INKING*	*FASTER*	*SHRINK BLANKET*
central control console	**x**			**x**	**x**	**x**	**x**	
Terminal	●			●	●	●	●	●[1)]
Printing couple control panel		**x**	**x**					
Portable terminal		**x**	**x**					

● = enabled run commands
x = disabled run commands
1) = both printing couples of the bridge can be run (only for rubber-rubber printing couples)

2.4 Makeready mode

Requirements

- Turn operating mode switch to position *MAKEREADY* or portable control station / portable terminal plugged in

Basic function

In makeready mode the superposed printing couples are dominantly de-allocated. The printing couples in this operating mode cannot be allocated to a web or production.
In makeready mode only the concerned printing couples can be run, and this only from a control device which has guaranteed good visibility.

Tab. 4 Run commands in makeready mode

	Run commands							
Control device	*REFERENCE*	*INSERT PLATES*	*LIFT OUT PLATES*	*FEED IN*	*WASH*	*PRE-INKING*	*FASTER*	*SHRINK BLANKET*
central control console	**x**			**x**	**x**	**x**	**x**	
Terminal	**x**			**x**	**x**	**x**	**x**	**x**
Printing couple control panel		●	●					
Portable terminal		●	●					

● = enabled run commands
x = disabled run commands

2.5 Test mode

Requirements

- *DRIVE TEST* on the terminal switched on

Basic function

In test mode the concerned printing couple and the facing printing couple are dominantly de-allocated. The printing couples in this operating mode cannot be allocated to a web or production.
All drives of the two printing couples of a bridge can be allocated to a test group and run from one terminal.

3 Allocation and de-allocate function groups

Note

Operating instructions are in Chapt. 2 Allocations and combined groups in Reg. 4 Operation in the *System* file.

4 ink supply

4.1 Installing the portable ink fountain

Requirements

- Production group / function group at standstill

Materials needed

- Reg. 3 Control elements

WARNING	**Risk of injury!** **Risk of being trapped and crushed** by rotating gear-wheels and rotating ink fountain roller! => Observe danger zone. => Keep hands at a safe distance from gearwheels and ink fountain roller. => Turn operating mode switch to position *MAKEREADY* when performing makeready work.

WARNING	**Risk of injury!** **Injury through cuts** from ink knives! => Observe the danger zone of the ink knife. => Touch ink knife only when wearing protective gloves.

1. On the terminal, change to the Ink level mask.
2. Switch off ink supply.
3. Insert portable ink fountain (3) until the cams (4) snap in (Fig. 1), (Fig. 2).
4. Switch on ink supply.
5. On the terminal, change to the Information mask.
6. Turn operating mode switch to position *OPERATION*.

Fig. 1 Installing the portable ink fountain

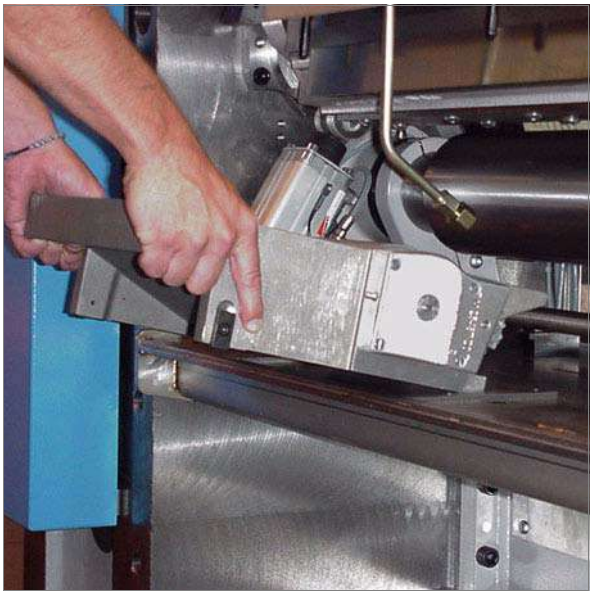

D_129_032_01

Fig. 2 Portable ink fountain mounted

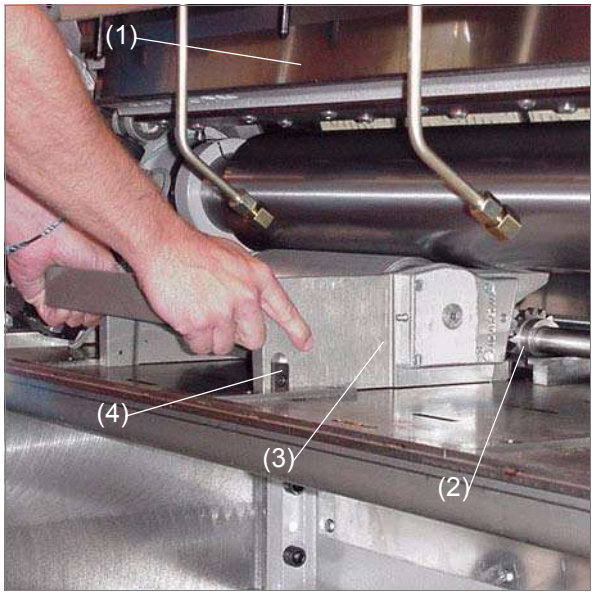

D_129_033_01

(1) Ink knife
(2) Ink trough cross-member gearwheel
(3) Portable ink fountain
(4) Cam

5 Ink knife bar

5.1 Swing out ink knife bar

Requirements

- Production group / function group at standstill
- Ink knife is correctly set (Chapt. 4.1.2 Set ink knives in Reg. 11 Ink knife bar)

Materials needed

- Reg. 3 Control elements

WARNING	**Risk of injury!** **Risk of being trapped and crushed** by swiveling ink knife bar! => Keep hands at a safe distance from the ink knife bar. => Swivel ink knife bar only when no persons are in the danger zone.

WARNING	**Risk of injury!** **Injury through cuts** from ink knives! => Observe the danger zone of the ink knife. => Touch ink knife only when wearing protective gloves.

CAUTION	**Machine damage!** The to the **ink fountain roller** by ink knife! => Always adhere to setting values and procedures in Chapt. 4.1.2 Set ink knives. => Before each throwon of the ink knife bar make sure that no foreign objects are clamped.

1. On the terminal, change to the Menu Printer \ Inking unit mask.
2. Swing ink knife bars on or off.
3. On the terminal, change to the Information mask.

5.2 Insert ink separators

Requirements

- Production group / function group at standstill
- Ink fountain roller is clean (Chapt. 4.12 Clean ink fountain roller, ink knife, ink separators in Reg. 6 Maintenance)

Materials needed

- Soft cloth
- Special grease: e.g. Blasolube 540, BP Energrease LS3
- Reg. 3 Control elements

WARNING	
	Risk of injury! **Risk of being trapped and crushed** by swiveling ink knife bar! => Keep hands at a safe distance from the ink knife bar. => Swivel ink knife bar only when no persons are in the danger zone.

WARNING	
	Risk of injury! **Injury through cuts** from ink knives! => Observe the danger zone of the ink knife. => Touch ink knife only when wearing protective gloves.

WARNING	
	Risk of injury! **Risk of being trapped and crushed** by rotating gearwheels and rotating ink fountain roller! => Observe danger zone. => Keep hands at a safe distance from gearwheels and ink fountain roller. => Turn operating mode switch to position *MAKEREADY* when performing makeready work.

1. On the terminal, change to the Ink level mask.
2. Switch off ink supply.
3. On the terminal, change to the Menu Printer \ Inking unit mask.
4. Swing away ink knife bar.
5. Fill ink separators (1) with special grease (2) (Fig. 3).

Note

Excessive grease in the ink separators (1) impairs the ink flow in the throwon phase.

6. Mount ink separators (1) (Fig. 4).
7. Swing on ink knife bar.
8. On the terminal, change to the Ink level mask.
9. Switch on ink supply.
10. On the terminal, change to the Information mask.
11. Turn operating mode switch to position *OPERATION*.

Fig. 3 De-grease ink separator

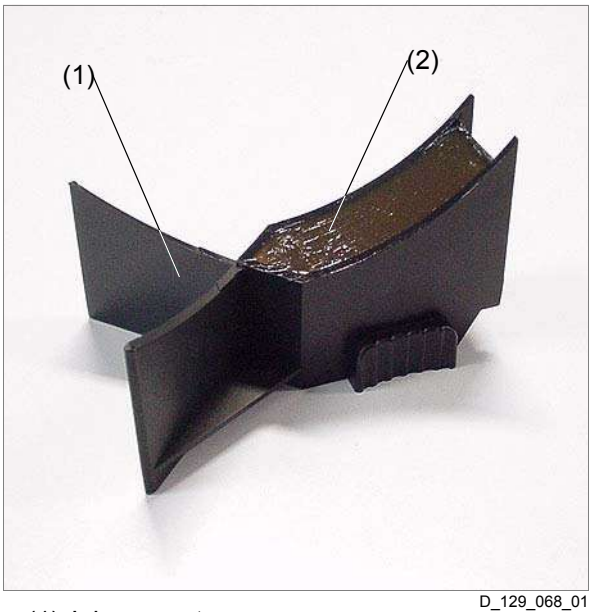

D_129_068_01

(1) Ink separator
(2) Special grease: e.g. Blasolube 540, BP Energrease LS3

Fig. 4 Insert ink separator

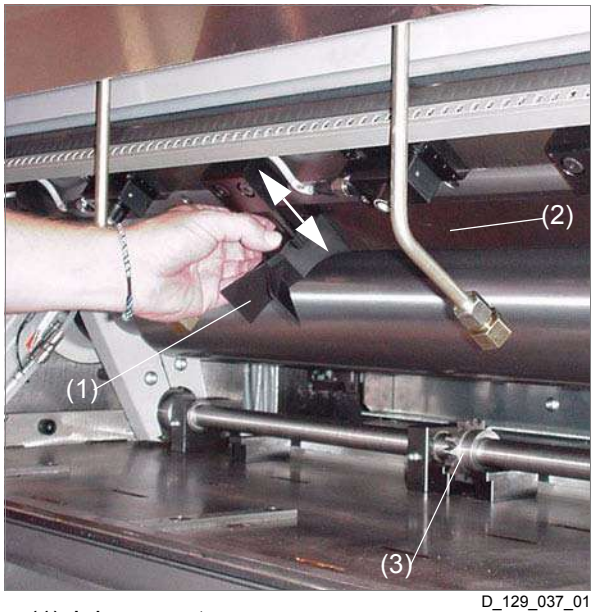

D_129_037_01

(1) Ink separator
(2) Ink knife
(3) Ink trough cross-member gearwheel

6 Plate cylinder

6.1 Manually insert and lift out printing plates

Requirements

- Production group / function group at standstill
- The cylinder surface is clean (Chapt. 4.5 Clean and conserve plate cylinder in Reg. 6 Maintenance)
- Punching and copying of the impression area on the printing plate has taken place accurately in form and register
- Bending of the printing plate has taken place accurately in form and register

Materials needed

- Tensioning lever for printing plates
- Reg. 3 Control elements

WARNING	**Risk of injury!** **Risk of being trapped and crushed** by rotating rollers and cylinders! => Turn operating mode switch to position *MAKEREADY*. => Turn printing couple only with the command *PLACE PLATES* or *LIFT OUT PLATES*. => Inch printing couple *FORWARD* or *BACK* only when nobody is in the danger zone.

CAUTION	**Machine damage!** Damage to the **impression cylinder and bearer rings** due to corrosion! => Use only anti-corrosive retarding rubber coating (on the back side of the printing plates) with a pH-value of ≥ 4.7. => Remove any leftover rubber coating before placing the printing plate. => If, nevertheless, remaining rubber coating gets onto the cylinder surface or bearer rings, remove immediately.

1. On the terminal, change to the Plate allocation \ mask.
2. Read the current configuration.

3. On the terminal, change to the Information mask.
4. From the control panel, *INCH FORWARD* or *INCH BACK* the printing couple.
5. Hook long plate bend in the retaining lug (1) (Fig. 5); (Fig. 6).
6. From the control panel, *INCH FORWARD* the printing couple by 180°.
7. Hook long plate bend in the retaining lug (3).
8. Check centering of the printing plate over the register cam (2).

Specification

Tension leaf spring (3) with the supplied tensioning levers.

9. Tension leaf spring (3).
10. Turn operating mode switch to position *OPERATION*.

Fig. 5 Plate tensioning device

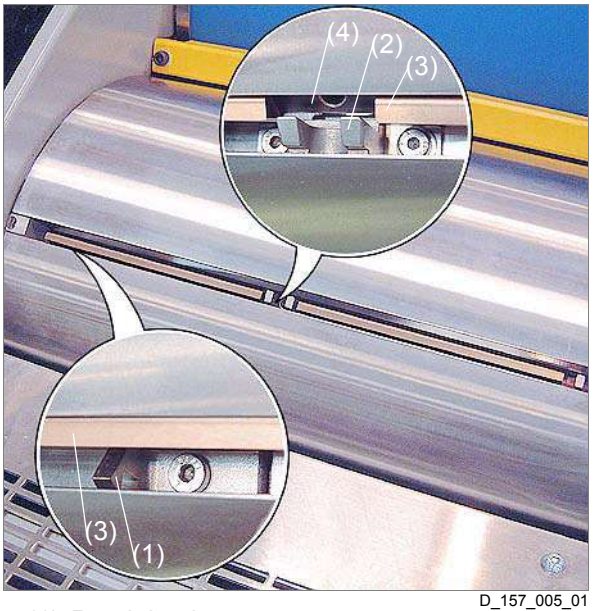

D_157_005_01

(1) Retaining lug
(2) Register cam
(3) Leaf spring
(4) Actuating element

Fig. 6 Section of plate cylinder lock-up slot

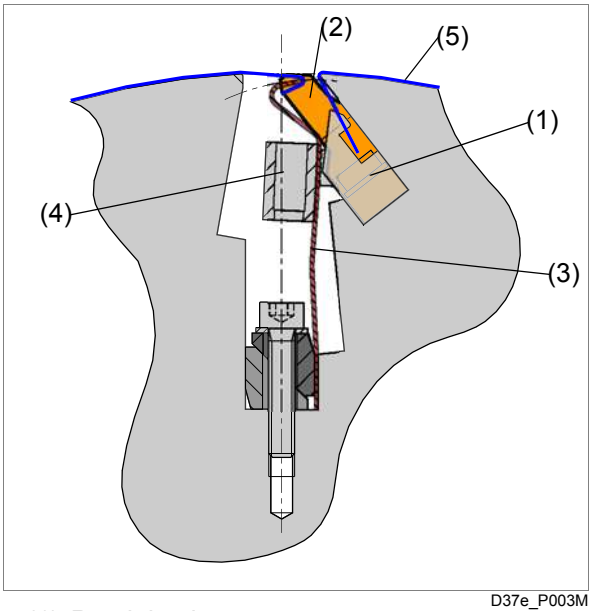

D37e_P003M

(1) Retaining lug
(2) Register cam
(3) Leaf spring
(4) Actuating element
(5) Printing plate

6.2 Printing with reduced web widths

Requirements

- None

Materials needed

- Dummy plates
- approved auxiliary operation oil from roller supplier

ATTENTION	**Damaged roller rubber coating!** Damage to roller rubber coating due to overheating! => Use only auxiliary operation oil approved by roller supplier. => Handle rubber rollers according the roller supplier's instructions.

In zones with paper guiding / without ink feed:

- Insert dummy plates
- Switch off ink feed
- Adjust water metering as in zones with ink feed

In zones without paper guiding:

- Insert no print or dummy plates
- Switch off ink feed
- Switch off water supply
- Apply auxiliary operation oil or switch on spray device (optional) for auxiliary operation oil

Fig. 7 Printing with reduced web widths

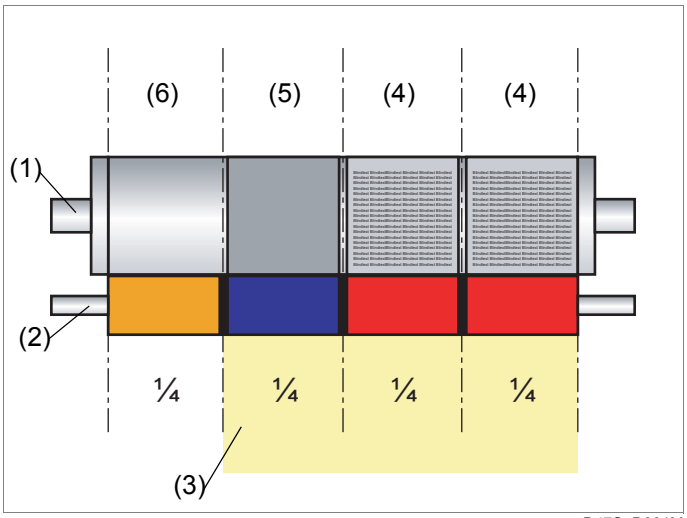

(1) Plate cylinder
(2) Rubber roller
(3) 3/4 web
(4) Printing plate
> ink and water metering
(5) Dummy plate
> only water metering
(6) No print or dummy plate
> Auxiliary operation oil

5 Lubrication

1 Overview ... 5.3
1.1 Lubrication systems ... 5.4
1.1.1 Oil circulation lubrication system ... 5.4
1.1.2 Bearer ring lubrication ... 5.5
1.1.3 Individual oil lubrication points ... 5.6
1.1.4 Centralized grease-lubrication system ... 5.7
1.1.5 Individual grease lubrication points ... 5.8
1.2 General safety information ... 5.9
1.3 Lubricant properties ... 5.11
1.4 Lubricant overview ... 5.12
1.5 Special lubricants and preservatives ... 5.13

2 Construction and function ... 5.14
2.1 Oil circulation lubrication system ... 5.15
2.1.1 Oil tank with pump group ... 5.15
2.1.2 Volume limiter ... 5.15
2.1.3 Progressive distributor ... 5.16
2.2 Bearer ring lubrication ... 5.17
2.2.1 Pump stand ... 5.17
2.2.2 Lubrication felt holder and metering elements ... 5.18
2.3 Individual oil lubrication points ... 5.19
2.4 Centralized grease-lubrication system ... 5.20
2.4.1 Pump stand ... 5.20
2.4.2 Progressive distributor ... 5.21
2.5 Individual grease lubrication points ... 5.22
2.6 Lubricated for life lubrication points ... 5.22

3 Replace components ... 5.23
3.1 WIFAG article numbers ... 5.24
3.2 Oil circulation lubrication system ... 5.25
3.2.1 Changing the oil pump ... 5.25
3.2.2 Replace filter ... 5.25
3.2.3 Replacing the progressive distributor ... 5.26
3.3 Bearer ring lubrication ... 5.28
3.3.1 Replacing pump stand ... 5.28
3.3.2 Replace lubrication felts ... 5.28
3.4 Centralized grease-lubrication system ... 5.30
3.4.1 Replacing pump stand ... 5.30
3.4.2 Replacing the progressive distributor ... 5.30

4 Basic settings ... 5.32
4.1 Setting ... 5.32
4.1.1 Set the operating pressure at the oil circulation lubrication system ... 5.32

4.2 Calibration **5.32**
4.3 Testing **5.33**
4.3.1 Test pump stands 5.33

5 Lubrication instructions **5.34**
5.1 Oil circulation lubrication system **5.34**
5.2 Bearer ring lubrication **5.35**
5.3 Lubricate individual oil lubrication points **5.36**
5.4 Centralized grease-lubrication system **5.37**
5.5 Lubricate individual grease lubrication points **5.38**

1 Overview

Contents

This chapter contains the following information:

- Chapt. 1.1 Lubrication systems
- Chapt. 1.2 General safety information
- Chapt. 1.3 Lubricant properties
- Chapt. 1.4 Lubricant overview
- Chapt. 1.5 Special lubricants and preservatives

1.1 Lubrication systems

1.1.1 Oil circulation lubrication system

Fig. 1 Oil circulation lubrication, side II

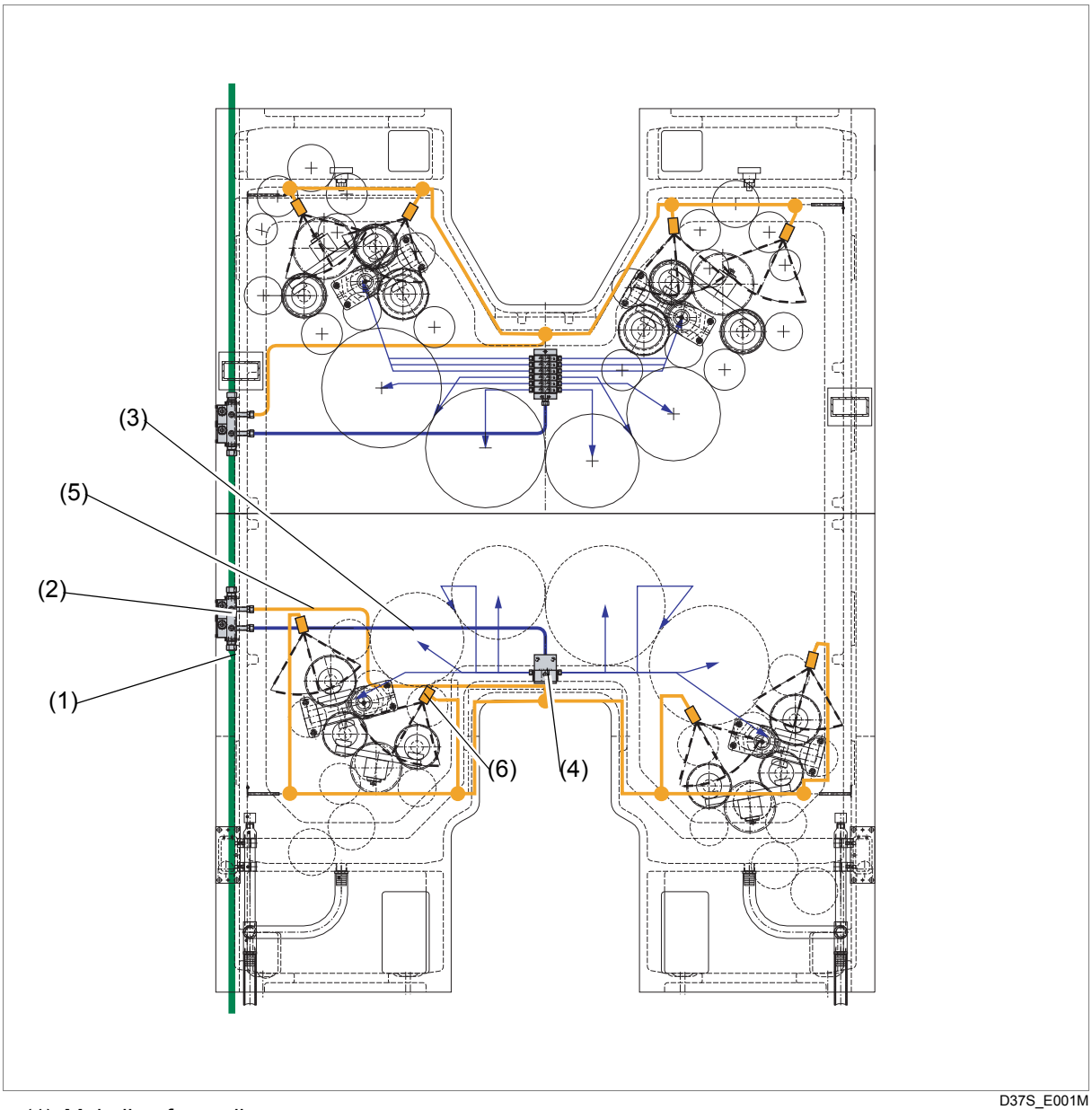

D37S_E001M

(1) Main line from oil pump group
(2) Volume limiter
(3) Feed line to progressive distributors
(4) Progressive distributor
(5) Feed line to spray nozzle
(6) Spray nozzle

1.1.2 Bearer ring lubrication

Fig. 2 Bearer ring lubrication sides I and II

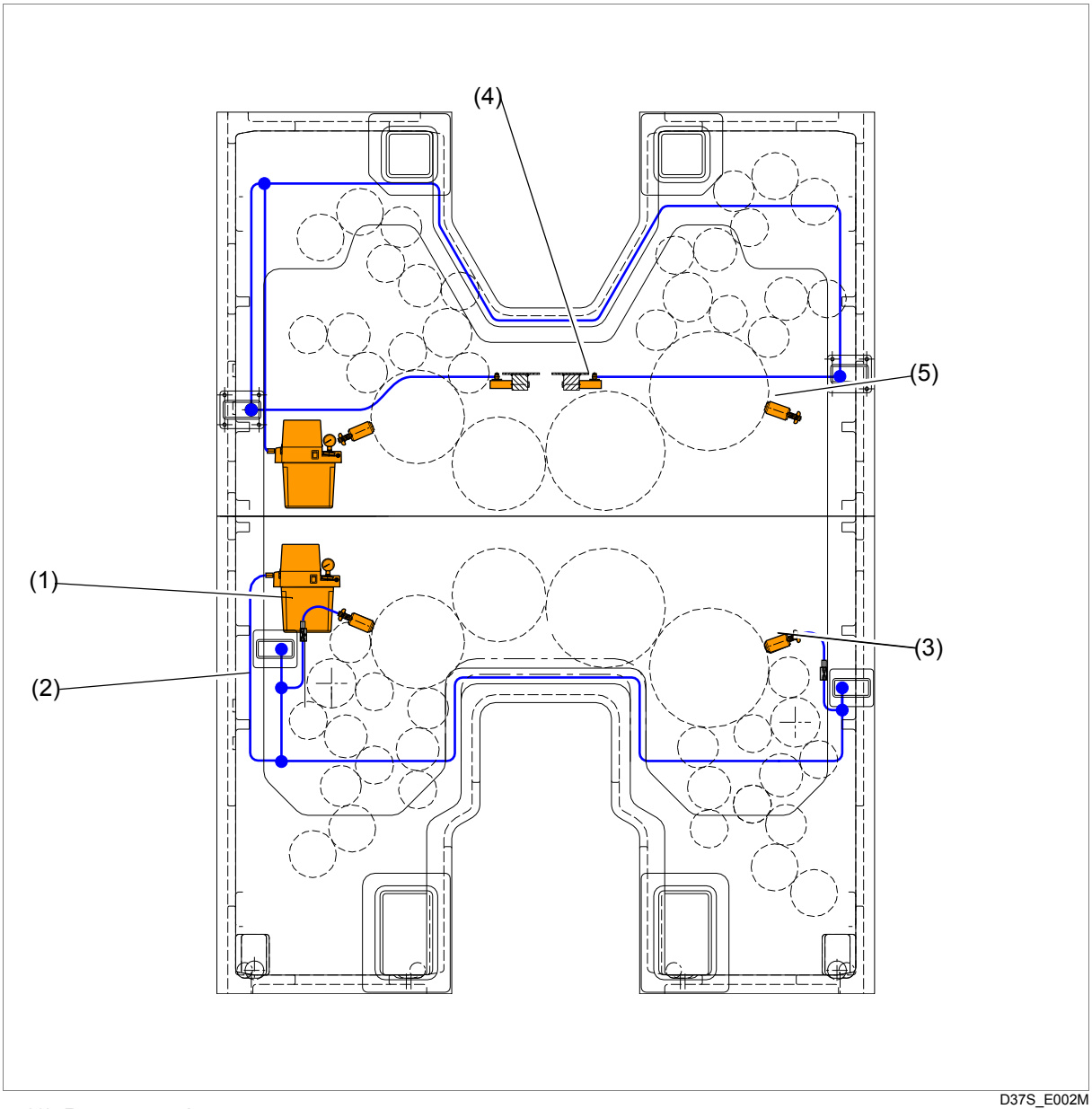

(1) Pump stand
(2) Feed line to metering elements
(3) Lubrication felt holder with metering element
(4) Metering element
(5) Lubrication felt holder

1.1.3 Individual oil lubrication points

Note

No individual oil lubrication points are present on the printing unit.

1.1.4 Centralized grease-lubrication system

Fig. 3 Centralized grease lubrication, sides I and II

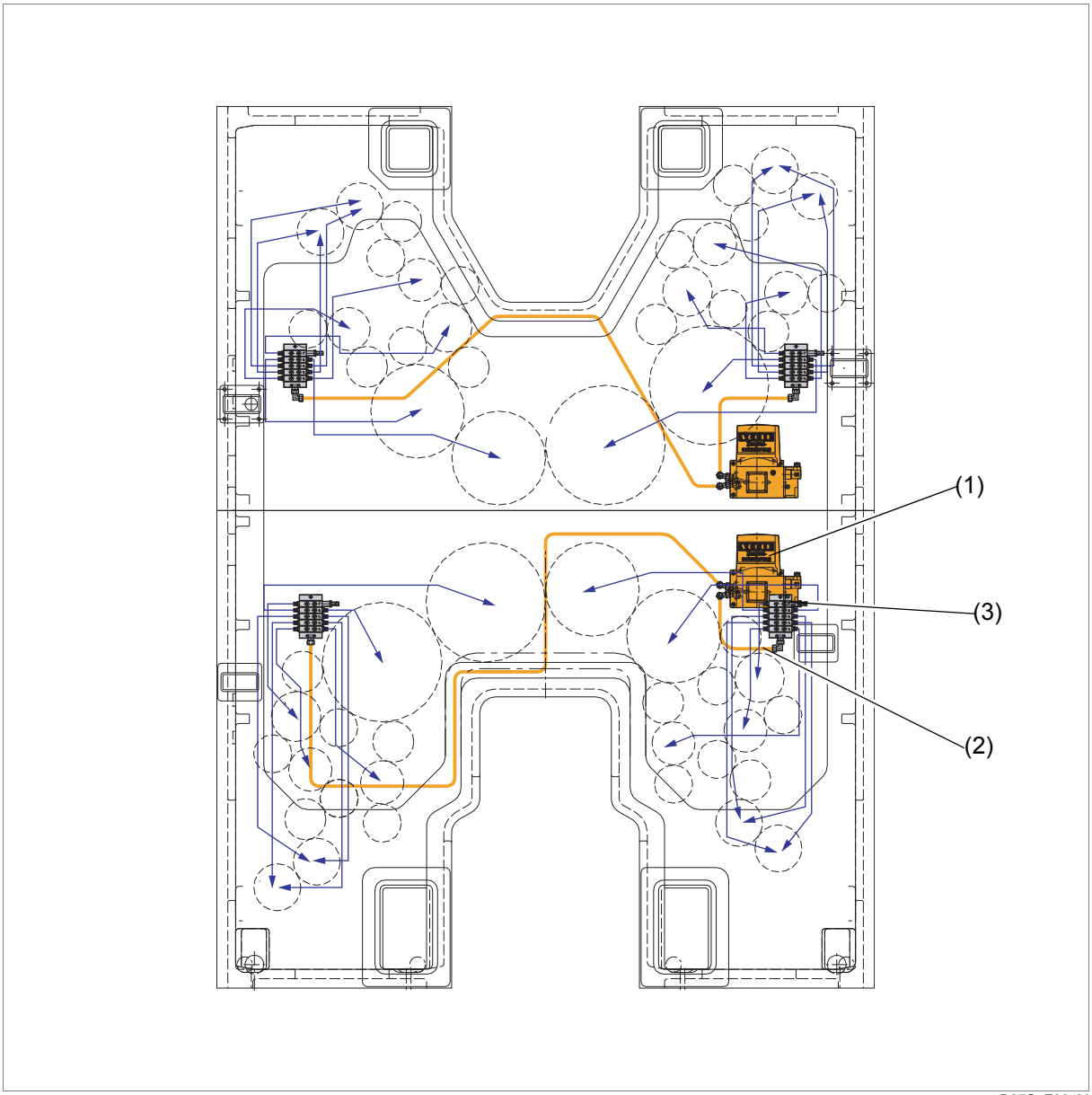

D37S_E004M

(1) Pump stand
(2) Feed line to progressive distributors
(3) Progressive distributor

1.1.5 Individual grease lubrication points

Fig. 4 Individual grease lubrication points, sides I and II

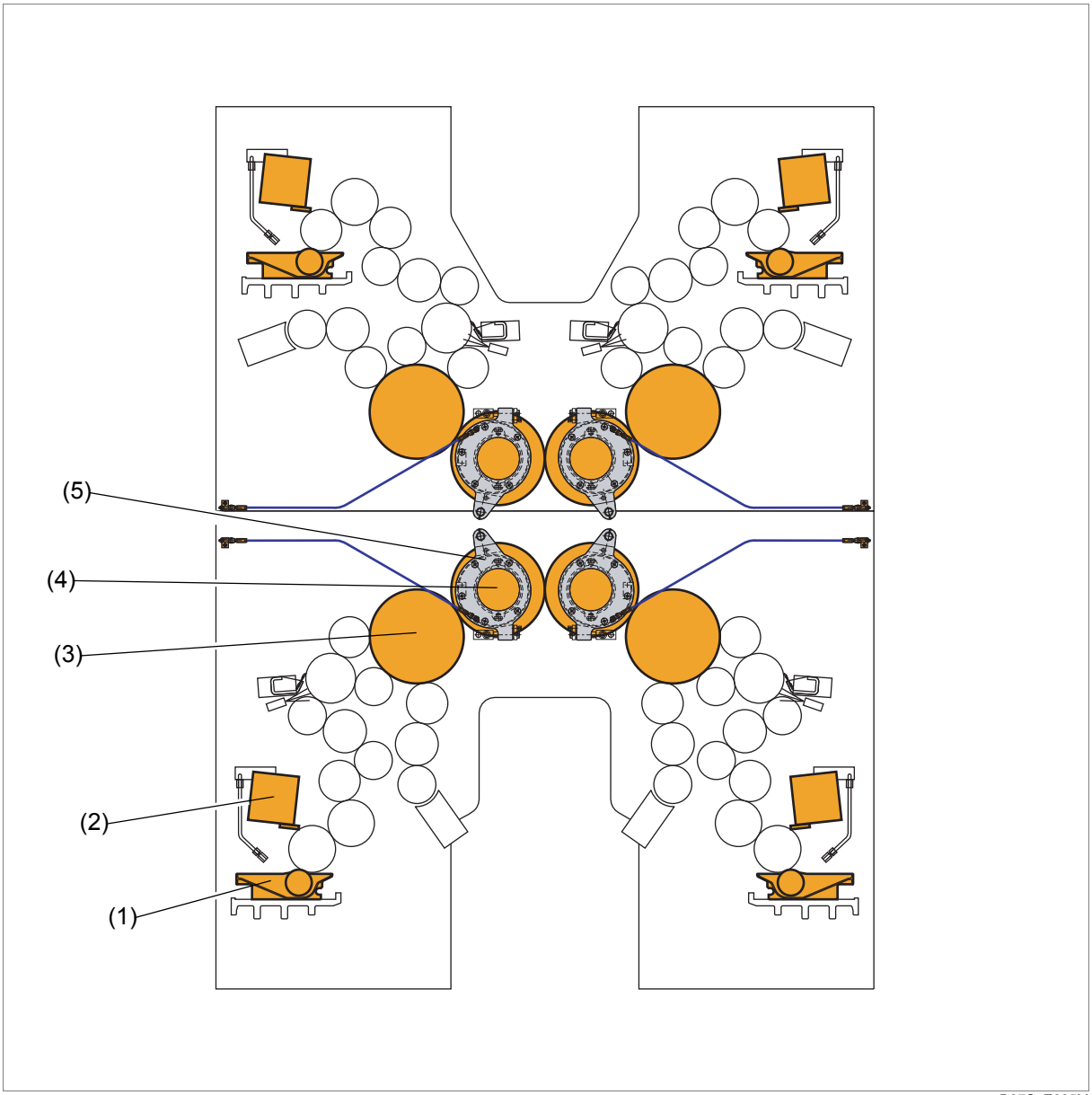

D37S_E005M

(1) Gearing on the portable ink fountain
(2) Ink key and bearing on the ink knife bar)
(3) Ball bearing of the sidelay register adjustment
(4) Ball bearing of the resolver bearing
(5) Eccentric of the impression throw-on

1.2 General safety information

DANGER	
	Danger! **Danger of explosion** due to toxic and explosive vapors! => Keep stocks of lubricants in a fireproof, lockable room. => Keep stocks of lubricants in clean containers that can be securely closed. => Comply with the local statutory regulations for work safety.

CAUTION	
	Machine damage! Damage of the **lubrication points** due to improper use of lubricants! => Use only lubricants recommended by WIFAG. => Never mix lubricants. => Clearly mark containers.

CAUTION	
	Machine damage! Damage to the **system** due to impure lubricant! => Always keep equipment such as oil cans, pumps and funnels in a clean and serviceable condition. => Reseal oil cans, pumps and containers after filling.

CAUTION	
	Machine damage! Damage to the **individual lubrication points** due to improper operation! => Clean lubrication points before and after lubrication service. => Comply with the lubrication instructions.

CAUTION	
	Machine damage! Damage to the **lubrication points** due to malfunctioning in the lubrication cycle! => Even the most minor faults must be rectified immediately.

WARNING	
	Risk of injury! **Environmental pollution** due to improperly disposed of lubricants! => Comply with the local statutory regulations.

1.3 Lubricant properties

Tab. 1 Lubricant properties (v 1.7 / 03.02.09)

WIFAG ID No.	Area of application	Properties
1	Gearbox with circulation or oil-bath lubrication	Paraffin-base mineral oil with oxidation and corrosion inhibitors, anti-foaming additives and good de-emulsification properties in accordance with DIN 51 517 / 3: CLP 68 or DIN 51 524 / 2: HLP 68
2	Centralized lubrication and general oil lubrication	Slideway oil with good adhesion properties, oxidation and corrosion inhibitors and high wear protection in accordance with DIN 51 502: CGLP 68
3	Centralized lubrication and general grease lubrication (autopaster)	Lithium soap grease with EP additives, good corrosion and wear protection, high heat resistance and good resistance to cold and warm water in accordance with DIN 51 825 / 3: KP2K
4	Bearer ring lubrication in Printing unit	Polyglycol-base synthetic lubricating oil with extremely good wear protection in compliance with DIN 51 502: CLP PG 220 **Caution!** Polyglycol-base oils must not be mixed with synthetic oils or mineral oils!
5	Impression throw-on in printing unit; clamping elements in autopasters (PR2.2/C, PR2/C, O, P)	Long life and high pressure grease **STABURAGS NBU 12 ALTEMP** from the lubricant supplier KLÜBER LUBRICATION. **Caution!** Experience acquired by WIFAG has shown that only **STABURAGS NBU 12 ALTEMP** is suitable for the specified area of application!
6	Plate tensioning devices and bare machine parts	High-grade corrosion protection, fast-acting and good penetration properties. Produces a very thin anti-corrosive film with a flash point of > 25° °C. **Caution!** Solvent-containing products are a fire hazard! Use solvent-free products if possible!
7	Centralized lubrication and general grease lubrication in autopasters (PR2.2/C; PR2/C, O, P)	Low viscosity gearbox grease with EP properties according to DIN 51 826: G 00 G **Caution!** Products in row 7 must not be mixed with each other!
8	Open gears (gearwheels, chains, threaded spindles)	Gearwheel lubricant according to DIN 51 502: OG 2 K; produces a pliant, water-resistant lubricant film with good adhesive properties. Or chain and adhesion oil spray.

1.4 Lubricant overview

Tab. 2 Lubricants recommended by lubricant suppliers (v 1.7 / 03.02.09) lists lubricant examples from international brands. You can use other brands, however, if desired. The lubricant supplier takes responsibility for guaranteeing that the prescribed lubricant specifications are complied to in accordance with Tab. 1 Lubricant properties (v 1.7 / 03.02.09).

Tab. 2 Lubricants recommended by lubricant suppliers (v 1.7 / 03.02.09)

WIFAG ID No.	bp	Castrol	Mobil	
1	ENERGOL HLP-HM68	OPTIGEAR 68	MOBIL DTE 26	OMALA OIL68
2	MACCURAT D 68	OPTIGEAR 68	MOBIL VACTRA No. 2	TONNA S 68
3	ENERGREASE LS-EP 2	LONGTIME PD 2	MOBILUX EP 2	ALVANIA EPLF 2
4	ENERSYN SG-XP 220	TRIBOL 800/220	MOBIL GLYGOYLE 30	TIVELA S 220
5	----------	----------	----------	----------
6	----------	----------	MOBILARMA 778	ENSIS DW
7	ENERGREASE LS-EP 00	LONGTIME PD 00	MOBILUX EP 004	ALVANIA GL 00
8	----------	VISCOGEN KL 300 SPRAY	MOBILGEAR OGL 007 AEROSOL	MALLEUS HDX
WIFAG ID No.	**KLÜBER LUBRICATION**	**Blaser. SWISSLUBE**		
1	KLÜBER-OIL GEM 1-68 N	Hydraulic + industrial oil 68, Art. 159		
2	LAMORA D 68	Slideway oil 68, Art. 743		
3	MICROLUBE GL 261	Blasolube 472, Art. 472		
4	SYNTHESO D 220 EP	Synth. gear oil PG 220, Art. 27251		
5	STABURAGS NBU 12 ALTEMP	----------		
6	KLÜBERSYNTH MZ 4-17	Anti-corrosive fluid, Art. 131		
7	MICROLUBE GB 00	Blasolube 371, Art. 371		
8	POLYLUB HVT-50 A SPRAY	Foodtec SAS 100, Art. 681		

1.5 Special lubricants and preservatives

Tab. 3 Special lubricants and preservatives (v 1.7 / 03.02.09)

Area of application	Products recommended by WIFAG
Assembly of components with close tolerance fittings	**Pressure resistant assembly** • Tunap Tunpas WP • Castrol Paste White T
Printing unit • Seals for electrical NC roller bearing • Bearing / thread of the ink keys • Ink knife bar covers • Plate tensioning device	**Water-resistant multipurpose grease** • Shell Rhodina SD2 (former name Aseol Aquares EP 810-60)
Printing unit • Ink separators • Column at the ink knife	**Multipurpose grease** • Blasolube 540, Art. 540 • BP Energrease LS 3 • Klüber Centoplex 3 • Shell Alvania EPLF 2 • Mobilgrease XHP 103 • Mobilith SHC PM 460 • Castrol Olit 2 EP
Folder • Draw roller drive gearwheels (only small amounts necessary when replacing the gearwheels!)	**Long-life lubricating grease** • Klüber Isoflex Topas NB5051
Printing unit • Inner sides of wall (dampening unit area)	**Anti-seize spray / corrosion prevention** • Metaflux 70-81
Printing unit • Counterpressure cylinder drive shaft	**Lubricating grease / corrosion prevention / rust solvent / cleaner** • WD-40 • Klüber Quietsch-Ex • Shell Ensis DW 1255 • Blasolube Foodtec SAS 100 Art. 681
Feed-in device • Feed-in chain **Folder** • Pressing rails (only for knife box)	**Teflon-base lubricant** • Klüber Fluoropan T 20 Spray • Rhodia Rhodorsil 4 x Spray • Blaser Rocol Teflon spray, Art. 651
Dérouleur • Center drive tensioning set • Draw roller drive tensioning set **Angle-bar and draw roller module** • Draw roller drive tensioning set	**Heavy duty grease** • Molykote BR 2

2 Construction and function

Contents

This chapter contains the following information:

- Chapt. 2.1 Oil circulation lubrication system
- Chapt. 2.2 Bearer ring lubrication
- Chapt. 2.3 Individual oil lubrication points
- Chapt. 2.4 Centralized grease-lubrication system
- Chapt. 2.5 Individual grease lubrication points
- Chapt. 2.6 Lubricated for life lubrication points

2.1 Oil circulation lubrication system

2.1.1 Oil tank with pump group

Note

Information about the oil tank with oil pump group is in Chapt. 2.2 Oil tank with pump group in Reg. 5 Lubrication in the *System* file.

2.1.2 Volume limiter

The volume limiters (1) (2) limit the amount of oil by means of a permanently screwed on metering screw (3) (Fig. 5). The oil flow amount remains always constant due to the volume limiters (1) (2) even if there are pressure changes.

If the specified oil quantity is not reached on a volume limiter (1) (2), the sensor (4) triggers the *STOP* command for the concerned printing unit or for the entire production group (in the combined group).

The fault is displayed on the terminal of the printing unit and on the control console (Chapt. 4 Malfunction indicators in Reg. 3 Control elements; see documentation of the control console manufacturer).

Fig. 5 Volume limiter, side II, front side left

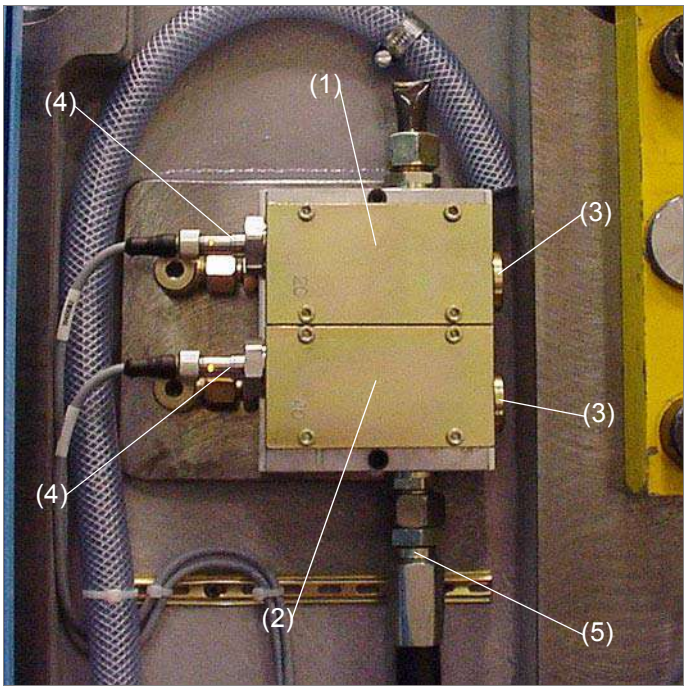

D_129_059_01

(1) Volume limiter
(lower bridge to progressive distributor)
(upper bridge to spray nozzles)

(2) Volume limiter
(lower bridge to spray nozzles)
(upper bridge to progressive distributor)

(3) Metering screw

(4) sensor

(5) Main line from oil pump group

2.1.3 Progressive distributor

The distributor consists of distributor disks (1) each containing a piston (Fig. 6). The pistons are located in metering chambers. During the supply process by means of the pump on the oil tank, the pistons are actuated one after the other in the metering chambers; the contents of the first metering chamber must be pushed out before the pistons of the second metering chamber can begin the same procedure. Once all pistons have pushed out the contents of their metering chambers, the cycle repeats as long as the pump supplies.

If the function of a piston is impaired or a line is damaged or blocked, the circulation lubrication is blocked and excess pressure builds up in the system. Owing to the resultant excess pressure, a *STOP* command is triggered for the relevant printing unit or production group by the sensor on the flow control valve.

The fault is displayed on the terminal of the printing unit and on the control console (Chapt. 4 Malfunction indicators in Reg. 3 Control elements; see documentation of the control console manufacturer).

Note

For further information about the pressure switch see Chapt. 2.2 Oil tank with pump group in Reg. 5 Lubrication in the *System* file.

Fig. 6 Progressive distributor, side II

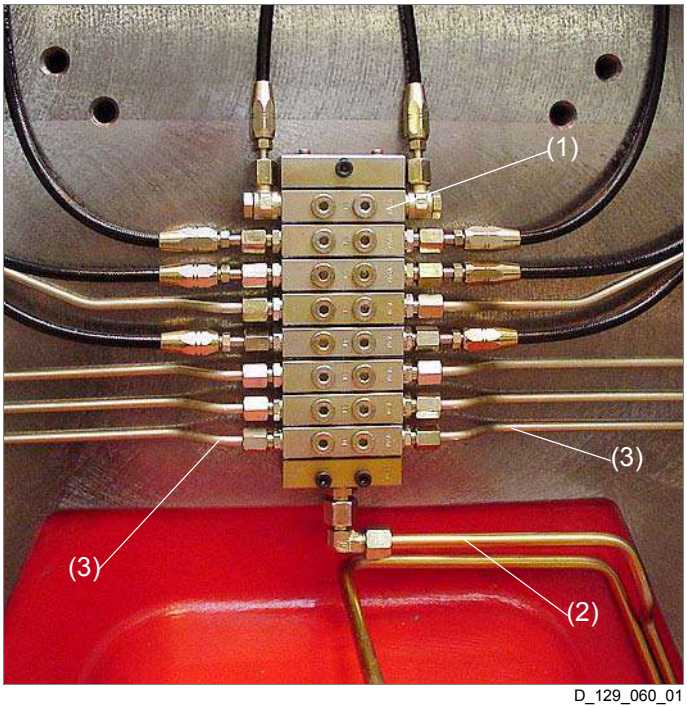

D_129_060_01

(1) Distributor disk
(2) Flow control valve feed line
(3) Feed line to lubrication point

2.2 Bearer ring lubrication

2.2.1 Pump stand

The pump stand is program controlled (Fig. 7). The lubrication intervals and flow rates are permanently set.

- Switched on when: the bridge or printing unit is switched on
- Start of the lubrication: after build up of oil pressure of 16 bar
- Lubrication interval: every 10 000 m (web path) in the position *PRINTING ON*
- Max. pump running time: 24 s

To test, manually actuate the pump stand using the pushbutton (1) or on the terminal. The fill level can be visually checked. Additionally, a float switch is installed for electronic monitoring. If the fill level is too low or if oil pressure of 16 bar is not reached after 15 s, a fault message is displayed on the terminal of the printing unit and on the central control console (Chapt. 4 Malfunction indicators in Reg. 3 Control elements; documentation of the control console manufacturer). This fault message cannot be acknowledged.

Fig. 7 Pump stand for bearer ring lubrication

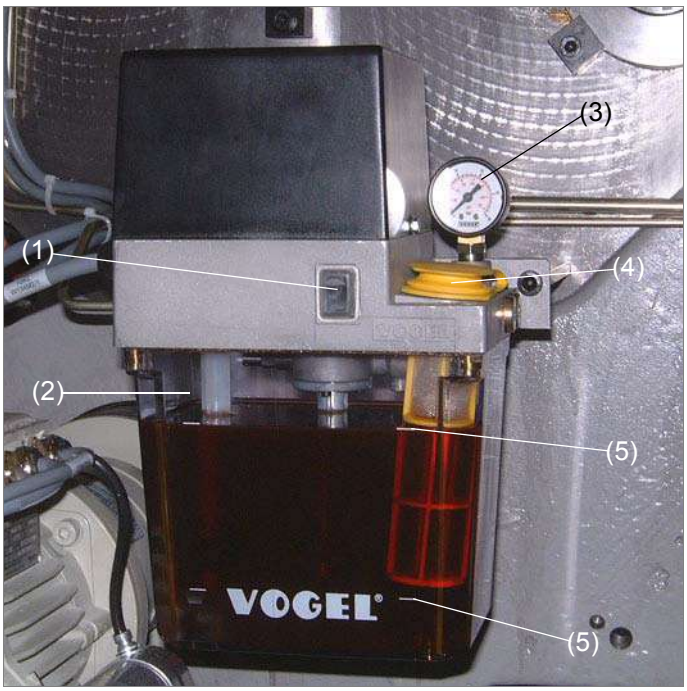

D 111,002 01

(1) Pushbutton
(2) Oil container
(3) Pressure gauge
(4) Filler inlet
(5) Level display

2.2.2 Lubrication felt holder and metering elements

The oil is pumped by the pump stand through hose lines to the metering elements (1) (Fig. 8). In the lower bridge the metering element (1) is integrated in the lubrication felt holder (2), and the oil is applied to the bearer ring (3) of the plate cylinder (4). In the upper bridge the metering element (1) is installed separately from the lubrication felt holder (2). The oil film is applied to the bearer ring of the blanket cylinder and wiped off with the lubrication felt on the bearer ring of the plate cylinder.

Fig. 8 Lubrication felt holder with metering element

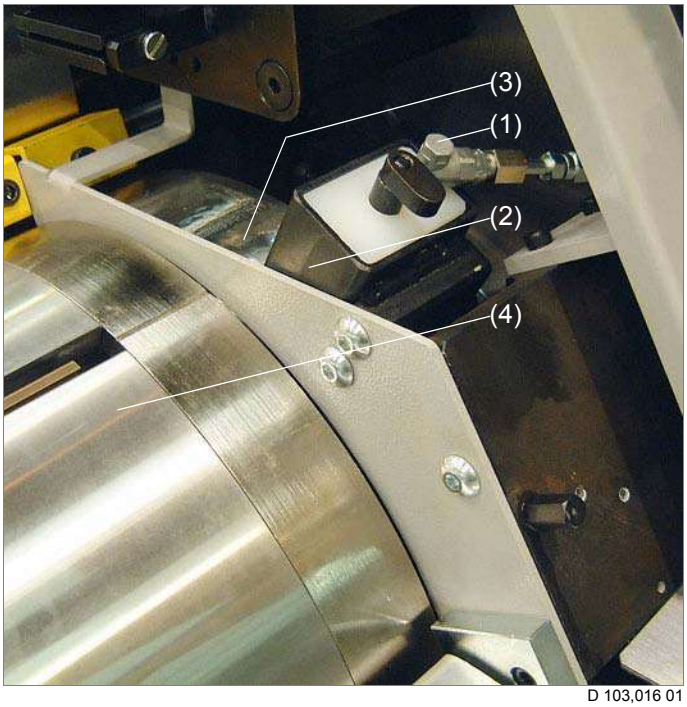

D 103,016 01

(1) Metering element
(2) Lubrication felt holder
(3) Bearer ring
(4) Plate cylinder

2.3 Individual oil lubrication points

Individual oil lubrication points are individual consumer points such as open drives and bearings. These are easy to access, run at low loads and speeds or are only occasionally operated by hand.
Individual oil lubrication points are connected to no system and are manually lubricated using an oil can or a spray can .

Lubrication intervals according to Chapt. 5.3 Lubricate individual oil lubrication points.

2.4 Centralized grease-lubrication system

2.4.1 Pump stand

The pump stand is program controlled (Fig. 9). The lubrication intervals and flow rates are permanently set.

- Switched on when: the bridge or printing unit is switched on
- Lubrication interval: every 2 000 000 Zyl/U
- Pump running time: 3 min

For testing purposes, the pump stand can also be manually actuated on the terminal. The fill level can be visually checked. Additionally, a float switch is installed for electronic monitoring. If the fill level is too low, the pump stand switches off. This displays an error message on the terminal of the printing unit and on the control console (Chapt. 4 Malfunction indicators in Reg. 3 Control elements; documentation of the control console manufacturer). This fault message cannot be acknowledged.

Fig. 9 Pump stand for centralized grease-lubrication system

D 111,003 01

(1) Grease container
(2) Grease nipple

2.4.2 Progressive distributor

The distributor consists of distributor disks (1) each containing a piston (Fig. 10). The pistons are located in metering chambers. During the supply process by the pump stand, the pistons are actuated one after the other in the metering chambers; the contents of the first metering chamber must be pushed out before the pistons of the second metering chamber can begin the same procedure. Once all pistons have pushed out the contents of their metering chambers, the cycle repeats as long as the pump supplies.

If the function of a piston is impaired or a line is damaged or blocked, the lubrication cycle is interrupted by the cycle switch (4). This displays an error message on the terminal of the printing unit and on the control console (Chapt. 4 Malfunction indicators in Reg. 3 Control elements; documentation of the control console manufacturer). This fault message cannot be acknowledged.

Fig. 10 Progressive distributor for centralized grease lubrication system

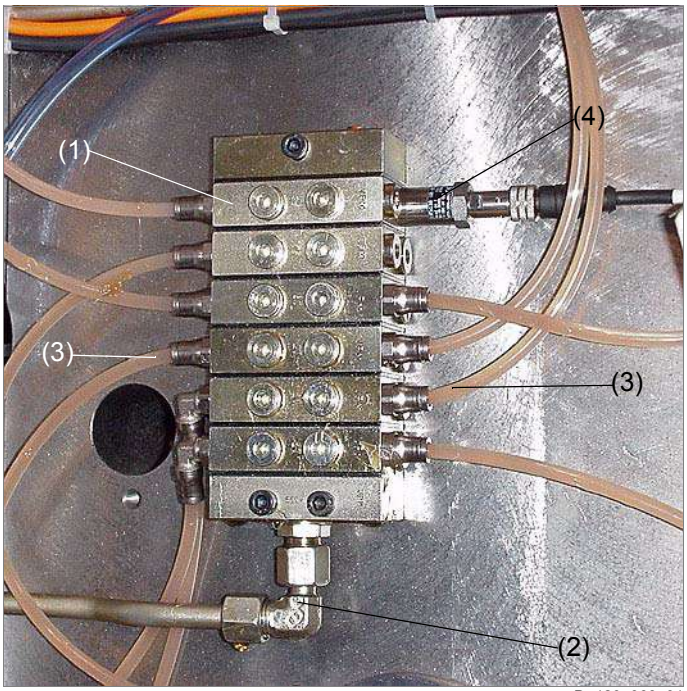

D_129_063_01

(1) Distributor disk
(2) Feed line from pump stand
(3) Feed line to lubrication point
(4) Cycle switch

2.5 Individual grease lubrication points

Individual oil lubrication points are individual consumer points such as e.g. open drives and bearings. These are easy to access, run at low loads and speeds or are only occasionally operated by hand.
Individual grease-lubrication points are not connected to any system and are manually lubricated using a portable grease gun or a hand-operated grease gun.

Lubrication intervals according to Chapt. 5.5 Lubricate individual grease lubrication points.

2.6 Lubricated for life lubrication points

The following elements are lubricated for life:
- Elements that are not connected to any lubrication system
- Elements that are not listed in Chapt. 1.1.3 Individual oil lubrication points
- Elements that are not listed in Chapt. 1.1.5 Individual grease lubrication points

3 Replace components

Contents

This chapter contains the following information:

- Chapt. 3.1 WIFAG article numbers
- Chapt. 3.2 Oil circulation lubrication system
- Chapt. 3.3 Bearer ring lubrication
- Chapt. 3.4 Centralized grease-lubrication system

Specification

For safety reasons only the replacement work described in these operating instructions may be performed! All replacement work not described herein must be performed by qualified WIFAG personnel.

3.1 WIFAG article numbers

Note

The WIFAG article numbers for parts of the oil tank with oil pump group can be found in Chapt. 3.1 WIFAG article numbers in Reg. 5 Lubrication in the *System* file.

Tab. 4 Overview of components and accessories

Article	Obtainable only from WIFAG	Can be ordered from WIFAG
Oil circulation lubrication / progressive distributor for BU	A5-07468ZO	----------
Oil circulation lubrication / progressive distributor for BO	A5-07468ZO	----------
Oil circulation lubrication / metering screws for volume limiter	----------	A57212 (1.4 l/min) A57031 (4.0 l/min)
Oil circulation lubrication / sensor for volume limiter	----------	A4-04455EW
Oil circulation lubrication / filter screen for volume limiter	----------	A57204
Bearer ring lubrication / pump stand	----------	9010340
Bearer ring lubrication / metering units	----------	114848(BU) A57220(BO) 114849
Bearer ring lubrication / lubrication felt	A4-12258RO	----------
Centralized grease-lubrication system / pump stand	----------	9010341
Centralized grease lubrication system / cycle switch	----------	9006166
Centralized grease lubrication system / progressive distributor for BU	A4-12375RO	----------
Centralized grease lubrication system / progressive distributor for BO	A4-12375RO	----------

3.2 Oil circulation lubrication system

3.2.1 Changing the oil pump

Note

For further information about replacement work see Chapt. 3 Replace components in Reg. 5 Lubrication in the *System* file.

3.2.2 Replace filter

Note

For further information about replacement work see Chapt. 3 Replace components in Reg. 5 Lubrication in the *System* file.

3.2.3 Replacing the progressive distributor

Requirements

- Cause of fault known (oil pump, feed line, oil)
- A possible peripheral component malfunction is corrected
- It is ensured that the fault is with the progressive distributor and that the new progressive distributor will not be damaged by peripheral influences

Materials needed

- 2 warning notices *Work is in progress!*
- *WIFAG Electrical circuit diagrams B*
- Fork wrench size 14, 17 and 19
- Allen key set
- Soft cloth

⚠ WARNING	**Risk of injury!** **Risk of being trapped and crushed** by rotating gearwheels! => De-allocate function group from the production group at the terminal and electrically disable (push the *SAFE-STOP* pushbutton). => Place *Work in progress!* warning signs on the corresponding terminals and control panels.

⚠ WARNING	**Risk of injury!** **Risk of eye injury** due to oil escaping under high pressure from the oil pump! => Switch off oil pump group at the motor protection switch in the control systems cabinet. => Place a warning notice *Work is in progress!* on the safety switch that is switched off.

Remove progressive distributor

1. Switch off motor protection switch in the control cabinet of the oil tank according to *WIFAG electrical diagrams B*.
2. Remove corresponding covers side II.
3. Remove pipe clips from lines (1) and (2) (Fig. 11).
4. Unscrew union nuts on lines (1) and (2).
5. Loosen and remove retaining screws (3).
6. Remove the progressive distributor.
7. Remove screw unions.

> The progressive distributor is now removed

Mount progressive distributor

8. Tighten screw unions on the new progressive distributor.
9. Install new progressive distributor.
10. Tighten retaining screws (3).
11. Tighten union nuts on lines (1); (2).
12. Fit and tighten pipe clips on lines (1); (2).
13. Switch on motor protection switch in the control cabinet of the oil tank according to *WIFAG electrical diagrams B*.
14. Unlock pushbutton *SAFE-STOP* .
15. On the terminal, change to the Menu Lubrication systems \ Oil circulation lubrication mask.
16. Switch oil pump on.
17. Check the progressive distributor for leaks.
18. Fit corresponding covers side II.

> The progressive distributor has now been replaced.

Fig. 11 Progressive distributor

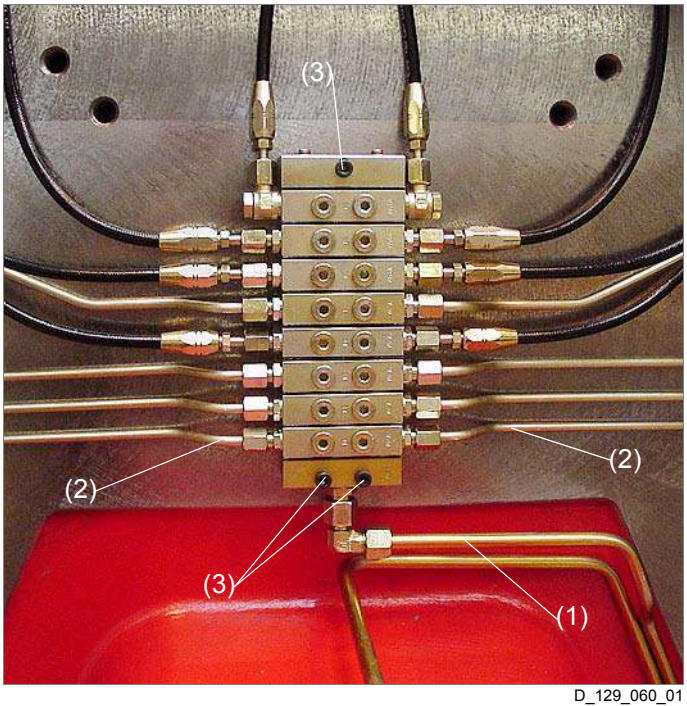

D_129_060_01

(1) Feed line to progressive distributor
(2) Lubricating line to the lubrication points
(3) Retaining screw

3.3 Bearer ring lubrication

3.3.1 Replacing pump stand

Note

For further information about replacement work see Chapt. 3 Replace components in Reg. 5 Lubrication in the *System* file.

3.3.2 Replace lubrication felts

Specification

All lubrication felts have to be replaced weekly!

Requirements

- Before use, new lubrication felts in *oil No. 4* for 5 days (Chapt. 1.3 Lubricant properties; Chapt. 1.4 Lubricant overview)

Materials needed

- Soft cloth

WARNING	**Risk of injury!** **Risk of being trapped and crushed** by rotating cylinders! => De-allocate function group from the production group at the terminal and electrically disable (push the *SAFE-STOP* pushbutton). => Place *Work in progress!* warning signs on the corresponding terminals and control panels.

1. Remove holder (1) with lubrication felt (2) from the mounting (3) (Fig. 12).
2. Replace lubrication felt (2) and put the holder (1) in the mounting (3).
3. At the terminal, change to the mask Menu Lubrication systems \ Bearing ring lubrication .
4. Initiate lubrication.

> The pump stand develops pressure of 16 bar

> The lubrication is activated for 24 s

5. Ensure that the required oil is expelled from each bearer ring lubrication point.

Fig. 12 Replace lubrication felts

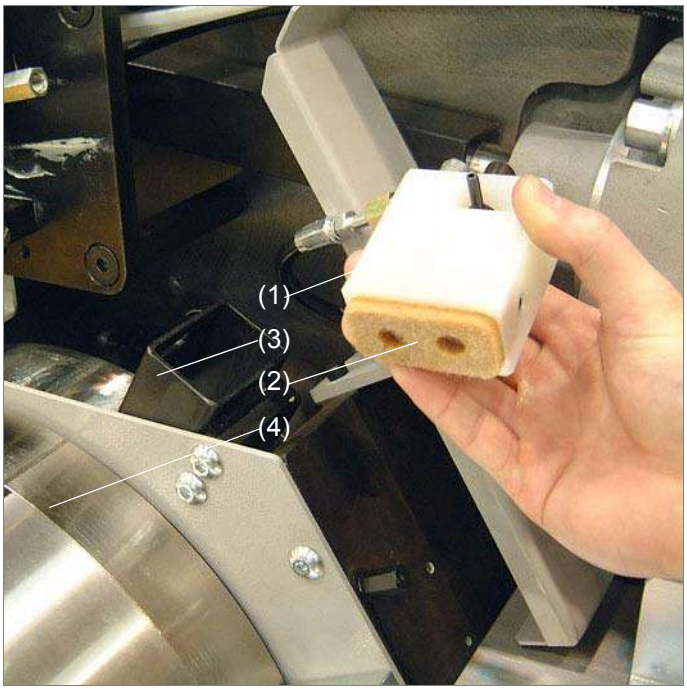

D 103,017 01

(1) Holder
(2) Lubrication felt
(3) Mounting
(4) Plate cylinder

3.4 Centralized grease-lubrication system

3.4.1 Replacing pump stand

Note

For further information about replacement work see Chapt. 3 Replace components in Reg. 5 Lubrication in the *System* file.

3.4.2 Replacing the progressive distributor

Requirements

- Cause of fault is known (pump stand, supply line, grease)
- A possible peripheral component malfunction is corrected
- It is ensured that the fault is with the progressive distributor and that the new progressive distributor will not be damaged by peripheral influences

Materials needed

- Warning sign *Work is in progress!*
- *WIFAG Electrical circuit diagrams B*
- Fork wrenches sizes 13, 17 and 19
- Allen key set
- Soft cloth

⚠ WARNING	**Risk of injury!** **Risk of being trapped and crushed** by rotating axels and shafts! => De-allocate function group from the production group at the terminal and electrically disable (push the *SAFE-STOP* pushbutton). => Place *Work in progress!* warning signs on the corresponding terminals and control panels.

Remove progressive distributor

1. Switch pump stand off at the motor protection switch according to *WIFAG electrical circuit diagrams B*.
2. Open corresponding covers side I.
3. Remove pipe clips from line (1) (Fig. 13).
4. Loosen union nuts on line (1) and disconnect.
5. Mark the connection positions on the hoses (2).
6. Remove the (2) hoses.
7. Remove cycle switch (4).

8. Loosen retaining screws (3) and remove the progressive distributor.
9. Remove screw unions.

> The progressive distributor is now removed

Mount progressive distributor

10. Tighten screw unions on the new progressive distributor.
11. Mount new progressive distributor and tighten with the retaining screws (3).
12. Attach line (1) and tighten union nuts.
13. Tighten pipe clips on line (1).
14. Insert hoses (2) according to the previously marked connection positions.
15. Install cycle switch (4).
16. Switch pump stand on at the motor protection switch according to *WIFAG electrical circuit diagrams B*.
17. Unlock pushbutton *SAFE-STOP* .
18. On the terminal, change to the Menu Lubrication systems \ Centralized grease lubrication mask.
19. Initiate lubrication.
20. Check the progressive distributor for leaks.
21. Close corresponding covers side I.

> The progressive distributor has now been replaced.

Fig. 13 Replacing the progressive distributor

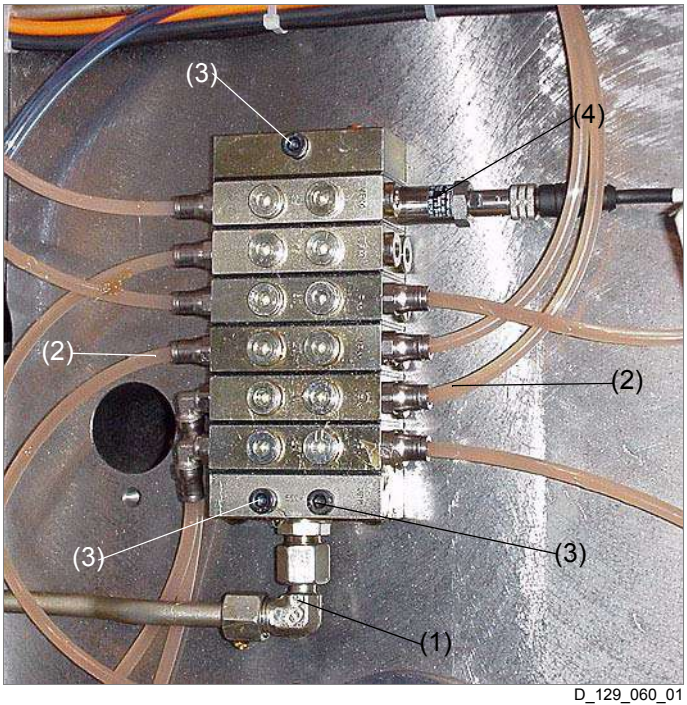

D_129_060_01

(1) Feed line to progressive distributor
(2) Lubricating line to the lubrication points
(3) Retaining screw
(4) Cycle switch

4 Basic settings

Contents

This chapter contains the following information:

- Chapt. 4.1 Setting
- Chapt. 4.2 Calibration
- Chapt. 4.3 Testing

Specification

For safety reasons only the adjustment work described in these operating instructions may be performed! All adjustment work not described herein must be performed by qualified WIFAG personnel.

4.1 Setting

4.1.1 Set the operating pressure at the oil circulation lubrication system

Note

For further information about setting work see Chapt. 4.1.1 Set the operating pressure at the oil circulation lubrication in Reg. 5 Lubrication in the *System* file.

4.2 Calibration

Note

No calibrations are necessary on this sub-function group.

4.3 Testing

4.3.1 Test pump stands

Requirements

- Production group / function group at standstill
- Handle lubricants in accordance with the general directives (Chapt. 1.2 General safety information)

Materials needed

- Reg. 3 Control elements

Specification

The pump stands have to be tested once a year and after every removal, installation or replacement of components having to do with the lubrication system.

1. At the terminal, change to the mask Menu Lubrication systems \ Bearing ring lubrication or Menu Lubrication systems \ Centralized grease lubrication.
2. Initiate lubrication.
3. Check functionality of the pump stands.
4. Check lubrication points for escaping grease or oil.
5. On the terminal, change to the Fault messages \ mask.
6. Check whether there are any malfunction messages.
7. On the terminal, change to the Information mask.

5 Lubrication instructions

Contents

This chapter contains the following information:

- Chapt. 5.1 Oil circulation lubrication system
- Chapt. 5.2 Bearer ring lubrication
- Chapt. 5.3 Lubricate individual oil lubrication points
- Chapt. 5.4 Centralized grease-lubrication system
- Chapt. 5.5 Lubricate individual grease lubrication points

5.1 Oil circulation lubrication system

Requirements

- Handle lubricants in accordance with the general guidelines (Chapt. 1.2 General safety information)!

Materials needed

- Permanently installed oil tank with oil pump group (capacity 275 l)
- Oil No. 1 (Chapt. 1.3 Lubricant properties; Chapt. 1.4 Lubricant overview)

Level display

On the oil tank with oil pump group there is a level display on which the level can be visually checked. For further information about the oil tank see Chapt. 2.2 Oil tank with pump group in Reg. 5 Lubrication in the *System* file.

Replenish lubricant

For further information about replenishing see Chapt. 4.7 Oil change at the oil circulation system in Reg. 6 Maintenance in the *System* file.

Lubrication intervals

The pump group is program-controlled and the lubrication cycle cannot be directly influenced by the user.

Lubrication points

Information about the lubrication points is in Chapt. 1.1.1 Oil circulation lubrication system.

5.2 Bearer ring lubrication

Requirements

- Handle lubricants in accordance with the general guidelines (Chapt. 1.2 General safety information)!

Materials needed

- Permanently installed pump stand (capacity 1.8 l) (Fig. 7)
- Oil No. 4 (Chapt. 1.3 Lubricant properties; Chapt. 1.4 Lubricant overview)

Level display

The oil container on the pump stand is transparent to enable the oil level to be checked visually. Also, the fill level is electronically monitored and displayed on the terminal and control console. Further information about the pump stand is in Chapt. 2.2.1 Pump stand.

Replenish lubricant

Information about replenishing is in Chapt. 4.27 Check / replenish pump stand in Reg. 6 Maintenance.

Lubrication intervals

The pump stand is program-controlled and the lubrication cycle cannot be directly influenced by the user.

Lubrication points

Information about the lubrication points is in Chapt. 1.1.2 Bearer ring lubrication.

5.3 Lubricate individual oil lubrication points

Note

No individual oil lubrication points are present on the printing unit.

5.4 Centralized grease-lubrication system

Requirements

- Handle lubricants in accordance with the general guidelines (Chapt. 1.2 General safety information)!

Materials needed

- Permanently installed pump stand (capacity 1 l or 1 kg) (Fig. 9)
- Grease No. 3 (Chapt. 1.3 Lubricant properties; Chapt. 1.4 Lubricant overview)

Level display

The grease container on the pump stand is transparent to enable the level to be checked visually. Also, the fill level is electronically monitored and displayed on the terminal and control console. Further information about the pump stand is in Chapt. 2.4.1 Pump stand.

Replenish lubricant

Information about replenishing is in Chapt. 4.27 Check / replenish pump stand in Reg. 6 Maintenance.

Lubrication intervals

The pump stand is program-controlled and the lubrication cycle cannot be directly influenced by the user.

Lubrication points

Information about the lubrication points is in Chapt. 1.1.4 Centralized grease-lubrication system.

5.5 Lubricate individual grease lubrication points

Requirements

- Handle lubricants in accordance with the general directives (Chapt. 1.2 General safety information)

Materials needed

- Warning sign *Work is in progress!*
- Brush
- Soft cloth
- Hand-operated grease gun with grease No. 3 (Chapt. 1.3 Lubricant properties; Chapt. 1.4 Lubricant overview)
- Portable pump with grease No. 5 (Chapt. 1.3 Lubricant properties; Chapt. 1.4 Lubricant overview)
- Bushing with special grease ASEOL Aquares EP 810-60 (Chapt. 3.1 WIFAG article numbers)

DANGER	**Danger!** **Operation** of the function group by others! => De-allocate function group from the production group at the terminal and electrically disable (push the *SAFE-STOP* pushbutton). => Place Work in progress! warning signs on the corresponding terminals and control panels. => Before entering each command at a terminal or control panel, make certain that nobody is in the danger zone.

Lubrication intervals

The following guide values apply to the lubrication intervals:

- Weekly or max. 65 operating hours
- Monthly or max. 250 operating hours
- Every six months or max. 1,500 operating hours
- Annually or max. 3,000 operating hours

Tab. 5 Overview of lubrication work for individual grease lubrication points

Lubrication points	Lubrication specification	Lubricant identification number	Interval
Blanket cylinder • Cam of the impression throw-on sides I and II (Fig. 14)	3 to 4 grease-gun shots while at the same time throwing *ON* and *OFF*	Grease No. 5	Weekly And when impression throw *ON* / *OFF* is abrupt
Ink knife bar • Bearing sides I and II (Fig. 15) • Bearing and threaded part of each ink key (Fig. 16)	3 to 4 grease-gun shots Apply with brush	Grease No. 3 Special grease ASEOL Aquares EP 810-60	Weekly After repair and intervention work
Drive shaft for portable ink fountain • all shaft bearings (Fig. 17)	3 to 4 grease-gun shots	Grease No. 3	Half yearly
Portable ink fountain • Spur gear (Fig. 18)	3 to 4 grease-gun shots	Grease No. 3	After cleaning
Plate cylinder • Ball bearing of the sidelay register adjustment (Fig. 19)	Too much grease can increase the friction of the enclosed bearing and cause material damage! Relubricate the lubrication point only with a hand-operated grease gun and a max. of 2 pump shots.	Grease No.3	Yearly
Blanket cylinder • Ball bearing of the resolver bearing (Fig. 20)			

Fig. 14 Impression throw-on cam

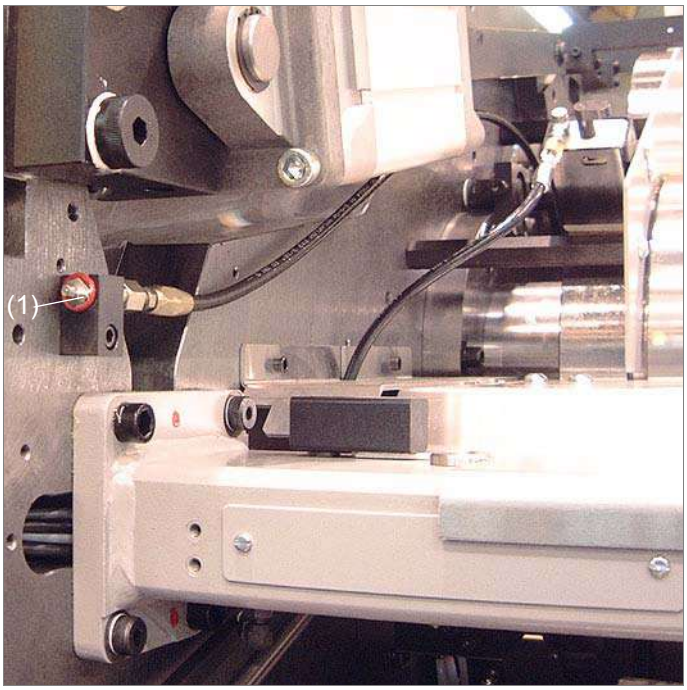

D_147_015_01

(1) Cam of the impression throw-on sides I and II: Grease No. 5

Fig. 15 Bearing of the ink knife bar

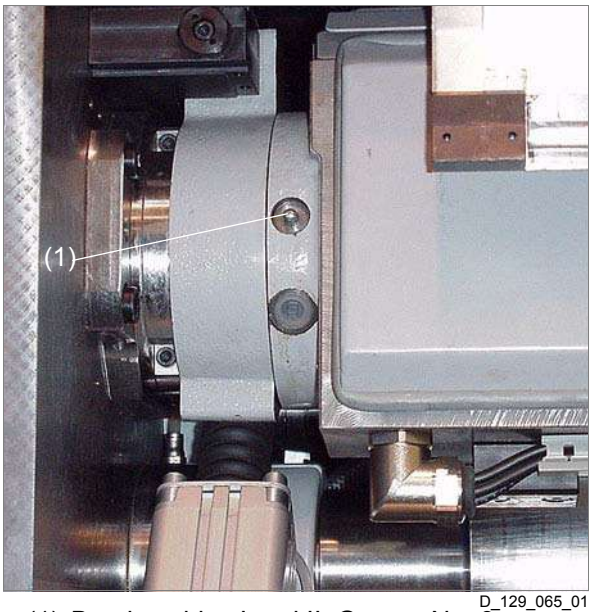

D_129_065_01

(1) Bearing sides I and II: Grease No. 3

Fig. 16 Ink key

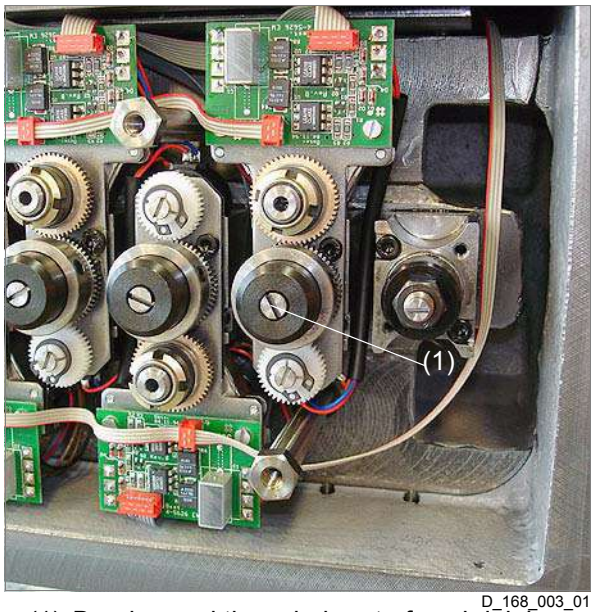

D_168_003_01

(1) Bearing and threaded part of each ink key: Special grease ASEOL Aquares EP 810-60

Fig. 17 Drive shaft for portable ink fountain

D_147_016_01

(1) Shaft bearing: Grease No. 3

Fig. 18 Portable ink fountain

D 124,006 02

(1) Spur gear: Grease No. 3

Fig. 19 Sidelay register adjustment

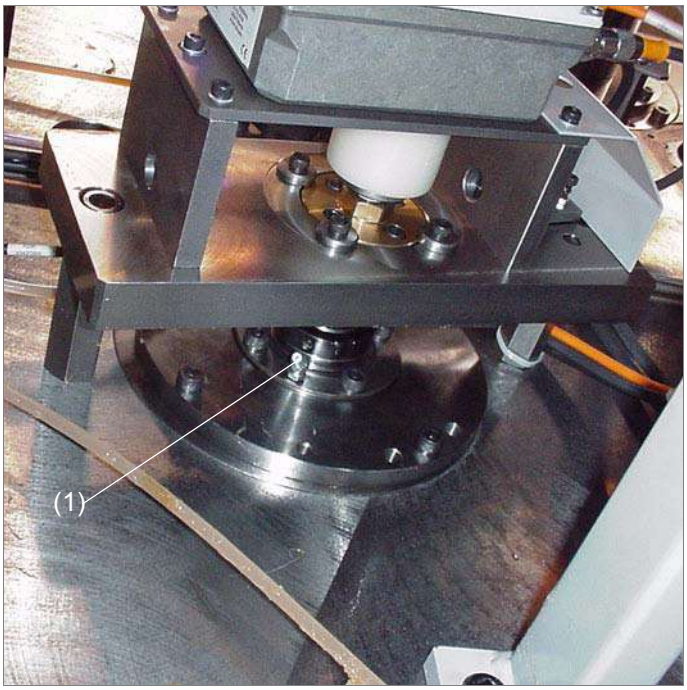

D_129_066_01

(1) Ball bearing of the sidelay register adjustment: Grease No. 3

Fig. 20 Resolver bearing

D_129_067_01

(1) Ball bearing of the resolver bearing: Grease No. 3

6 Maintenance

1 Information and regulations 6.3

2 Maintenance intervals 6.3

3 Maintenance schedules 6.4
3.1 Maintenance schedules of the entire installation 6.4
3.2 Daily maintenance schedule (after production / shift) 6.5
3.3 Weekly maintenance schedule 6.6
3.4 Monthly maintenance schedule 6.7
3.5 Biannual maintenance schedule 6.8
3.6 Annual maintenance schedule 6.9
3.7 Maintenance schedule at special intervals 6.10
3.8 Maintenance schedule for suppliers' components 6.11

4 Maintenance activities 6.12
4.1 Clean blanket cylinder 6.14
4.2 Clean rubber rollers, oscillating drum, ink pickup roller 6.16
4.3 Check / clean portable ink fountain and ink level sensors 6.17
4.4 Clean doctor blade on the roller washing device 6.20
4.5 Clean and conserve plate cylinder 6.22
4.6 Dry clean reflected light sensors 6.24
4.7 Inspecting / cleaning the fan-out roller 6.25
4.8 Shut off the dampening solution supply 6.27
4.9 Remove ink and paper dust 6.28
4.10 Clean roller washing device 6.29
4.11 Clean reflected light sensor with optical cleaner 6.31
4.12 Clean ink fountain roller, ink knife, ink separators 6.33
4.13 Regenerate rubber rollers 6.38
4.14 Re-clean oscillating drums 6.39
4.15 Adjust sidelay register 6.40
4.16 Adjust the fan-out compensator 6.41
4.17 Clean line system of the dampening solution supply 6.42
4.18 Clean ink pickup roller and stops 6.43
4.19 Check pneumatic system 6.45
4.20 Check bearing of printing couple drive 6.46
4.21 Setting timing belt tensions 6.47
4.22 Conserve inner sides of wall 6.52
4.23 Clean plate tensioning device 6.54
4.24 Clean stops of ink knife bar throwon 6.56
4.25 Clean measuring head of color register controller 6.58
4.26 Check / replenish aerosol cleaning agent tank 6.60
4.27 Check / replenish pump stand 6.61
4.27.1 Pump stand for bearer ring lubrication 6.61

4.27.2 Pump stand for centralized grease-lubrication system 6.63
4.28 Check oscillating drums 6.64
4.29 Check bearer rings 6.65
4.30 Check rubber rollers 6.67
4.31 Checking the ink valves 6.68
4.32 Maintenance activities on ink pumps / ink filter 6.69
4.33 Maintenance activities on spray dampening systems 6.70
4.34 Maintenance activities on dampening solution devices 6.72
4.35 Maintenance activities on cylinder washing systems 6.73
4.36 Maintenance activities on pump stands 6.74

1 Information and regulations

The system must be checked regularly for the following reasons:
- so that the system remains operationally safe
- so that the system has long service life
- so that a uniform and high printing quality can be achieved

Contents

These maintenance instructions consist of the following three parts:

- Time of the maintenance activities in Chapt. 2 Maintenance intervals
- Summary of the maintenance activities in Chapt. 3 Maintenance schedules
- Description of the maintenance activities in Chapt. 4 Maintenance activities

Specification

The following points must be strictly complied with:
- The maintenance activities may be carried out only by qualified personnel!
- Observe the danger zones during all work and carry out the described measures!
- Perform all work in the prescribed maintenance intervals!
- Use only the listed cleaning and washing agents!
- Use only the listed lubricants!

2 Maintenance intervals

The maintenance activities must be performed in the following intervals:

- Daily or after max. 15 operation hours
- Weekly or after max. 65 operation hours
- Monthly or after max. 250 operation hours
- Biannually or after max. 1500 operation hours
- Annually or after max. 3000 operation hours

3 Maintenance schedules

Contents

This chapter contains the following information:

- Chapt. 3.1 Maintenance schedules of the entire installation
- Chapt. 3.2 Daily maintenance schedule (after production / shift)
- Chapt. 3.3 Weekly maintenance schedule
- Chapt. 3.4 Monthly maintenance schedule
- Chapt. 3.5 Biannual maintenance schedule
- Chapt. 3.6 Annual maintenance schedule
- Chapt. 3.7 Maintenance schedule at special intervals
- Chapt. 3.8 Maintenance schedule for suppliers' components

Note

The maintenance schedules refer only to the filter-regulator-lubricator unit function group.

3.1 Maintenance schedules of the entire installation

Note

The maintenance schedules of the entire installation are found in the following indexes:

- Reg. 6 Maintenance in the *System* file

3.2 Daily maintenance schedule (after production / shift)

Tab. 1 Daily maintenance schedule

Maintenance activities	Performed by	Date and name
Cleaning and conservation work		
Chapt. 4.1 Clean blanket cylinder	Printers	
Chapt. 4.2 Clean rubber rollers, oscillating drum, ink pickup roller	Printers	
Chapt. 4.3 Check / clean portable ink fountain and ink level sensors	Auxiliary personnel	
Chapt. 4.4 Clean doctor blade on the roller washing device	Auxiliary personnel	
Chapt. 4.5 Clean and conserve plate cylinder	Printers	
Chapt. 4.6 Dry clean reflected light sensors	Auxiliary personnel	
Chapt. 4.7 Inspecting / cleaning the fan-out roller	Auxiliary personnel	
Inspection and replenishing work		
None	----------	----------
Inspection and replacement work		
None	----------	----------
Inspection and adjustment work		
Chapt. 4.8 Shut off the dampening solution supply	Printers	

3.3 Weekly maintenance schedule

Tab. 2 Weekly maintenance schedule

Maintenance activities	Performed by	Date and name
Cleaning and conservation work		
Chapt. 4.9 Remove ink and paper dust	Auxiliary personnel	
Chapt. 4.10 Clean roller washing device	Auxiliary personnel	
Chapt. 4.11 Clean reflected light sensor with optical cleaner	Auxiliary personnel	
Inspection and replenishing work		
None	----------	----------
Inspection and replacement work		
Chapt. 3.3.2 Replace lubrication felts in Reg. 5 Lubrication	Auxiliary personnel	
Inspection and adjustment work		
None	----------	----------

3.4 Monthly maintenance schedule

Tab. 3 Monthly maintenance schedule

Maintenance activities	Performed by	Date and name
Cleaning and conservation work		
Chapt. 4.12 Clean ink fountain roller, ink knife, ink separators	Auxiliary personnel	
Chapt. 4.13 Regenerate rubber rollers	Printers	
Chapt. 4.14 Re-clean oscillating drums	Printers	
Inspection and replenishing work		
None	----------	----------
Inspection and replacement work		
None	----------	----------
Inspection and adjustment work		
Chapt. 4.15 Adjust sidelay register	Printers	
Chapt. 4.16 Adjust the fan-out compensator	Printers	

3.5 Biannual maintenance schedule

Tab. 4 Biannual maintenance schedule

Maintenance activities	Performed by	Date and name
Cleaning and conservation work		
Chapt. 4.17 Clean line system of the dampening solution supply	Mechanics	
Chapt. 4.18 Clean ink pickup roller and stops	Auxiliary personnel	
Inspection and replenishing work		
None	----------	----------
Inspection and replacement work		
Chapt. 4.19 Check pneumatic system	Mechanics	
Chapt. 4.20 Check bearing of printing couple drive	Mechanics	
Inspection and adjustment work		
Chapt. 4.21 Setting timing belt tensions	Mechanics	
Chapt. 3.1.7 WSE data backup in Reg. 11 Electrical setting and commissioning instructions in the *System* file	Electricians	

3.6 Annual maintenance schedule

Tab. 5 Annual maintenance schedule

Maintenance activities	Performed by	Date and name
Cleaning and conservation work		
Chapt. 4.22 Conserve inner sides of wall	Auxiliary personnel	
Chapt. 4.23 Clean plate tensioning device	Mechanics	
Inspection and replenishing work		
None	----------	----------
Inspection and replacement work		
Chapt. 3.4 Replace the filter cartridge of the pump group in Reg. 18 Washing units	Mechanics	
Inspection and adjustment work		
Chapt. 4.3.1 Test pump stands in Reg. 5 Lubrication	Mechanics	

3.7 Maintenance schedule at special intervals

Tab. 6 Maintenance schedule at special intervals

Maintenance activities / interval	Performed by	Date and name
Cleaning and conservation work		
Chapt. 4.24 Clean stops of ink knife bar throwon • in the event of irregular ink film on the ink fountain roller	Auxiliary personnel	
Chapt. 4.25 Clean measuring head of color register controller • message on the control console	Auxiliary personnel	
Inspection and replenishing work		
Chapt. 4.26 Check / replenish aerosol cleaning agent tank • message on the terminal / control console	Mechanics	
Chapt. 4.27 Check / replenish pump stand • message on the terminal / control console	Mechanics	
Inspection and replacement work		
Chapt. 4.28 Check oscillating drums • every 2 years	Printers	
Chapt. 4.29 Check bearer rings • every 4 weeks	Mechanics	
Chapt. 4.30 Check rubber rollers • every 2 years or if printing problems	Printers	
Chapt. 4.31 Checking the ink valves • every month during the first year of operation • every three months after the first year of operation	Printers	
Inspection and adjustment work		
Chapt. 4.21 Setting timing belt tensions • 8 hours after replacing a timing belt • and 500 hours after replacing a timing belt	Mechanics	
Chapt. 3.2 Replace rubber blankets / rubber blanket underlays in Reg. 17 Blanket cylinder • if noticeable printing reduction (approx. every 20,000,000 cyl/rev) • every 2 years at latest	Mechanics	
Chapt. 4.1.1 Set ink stripe widths (nip) in Reg. 15 Rubber rollers • 2-3 months after replacing a rubber roller • and every 6 months	Printers	

3.8 Maintenance schedule for suppliers' components

Tab. 7 Maintenance schedule for suppliers' components

Component / Location	Performed by	Date and name
Ink pumps • Chapt. 4.32 Maintenance activities on ink pumps / ink filter	Mechanics / electricians	
Spray dampening system • Chapt. 4.33 Maintenance activities on spray dampening systems	Mechanics / electricians	
Dampener unit • Chapt. 4.34 Maintenance activities on dampening solution devices	Mechanics / electricians	
Cylinder washing unit • Chapt. 4.35 Maintenance activities on cylinder washing systems	Mechanics / electricians	
Pump stand for bearer ring lubrication • Chapt. 4.36 Maintenance activities on pump stands	Mechanics / electricians	
Pump stand for centralized grease-lubrication system • Chapt. 4.36 Maintenance activities on pump stands	Mechanics / electricians	

4 Maintenance activities

Contents

This chapter contains the following information:

Daily maintenance work

- Chapt. 4.1 Clean blanket cylinder
- Chapt. 4.2 Clean rubber rollers, oscillating drum, ink pickup roller
- Chapt. 4.3 Check / clean portable ink fountain and ink level sensors
- Chapt. 4.4 Clean doctor blade on the roller washing device
- Chapt. 4.5 Clean and conserve plate cylinder
- Chapt. 4.6 Dry clean reflected light sensors
- Chapt. 4.7 Inspecting / cleaning the fan-out roller
- Chapt. 4.8 Shut off the dampening solution supply

Weekly maintenance activities

- Chapt. 4.9 Remove ink and paper dust
- Chapt. 4.10 Clean roller washing device
- Chapt. 4.11 Clean reflected light sensor with optical cleaner

Monthly maintenance work

- Chapt. 4.12 Clean ink fountain roller, ink knife, ink separators
- Chapt. 4.13 Regenerate rubber rollers
- Chapt. 4.14 Re-clean oscillating drums
- Chapt. 4.15 Adjust sidelay register
- Chapt. 4.16 Adjust the fan-out compensator

Biannual maintenance activities

- Chapt. 4.17 Clean line system of the dampening solution supply
- Chapt. 4.18 Clean ink pickup roller and stops
- Chapt. 4.19 Check pneumatic system
- Chapt. 4.20 Check bearing of printing couple drive
- Chapt. 4.21 Setting timing belt tensions

Yearly maintenance activities

- Chapt. 4.22 Conserve inner sides of wall
- Chapt. 4.23 Clean plate tensioning device

Maintenance activities with special intervals

- Chapt. 4.24 Clean stops of ink knife bar throwon
- Chapt. 4.25 Clean measuring head of color register controller
- Chapt. 4.26 Check / replenish aerosol cleaning agent tank
- Chapt. 4.27 Check / replenish pump stand
- Chapt. 4.28 Check oscillating drums
- Chapt. 4.29 Check bearer rings
- Chapt. 4.30 Check rubber rollers
- Chapt. 4.31 Checking the ink valves
- Chapt. 4.21 Setting timing belt tensions

Maintenance activities on suppliers' components

- Chapt. 4.32 Maintenance activities on ink pumps / ink filter
- Chapt. 4.33 Maintenance activities on spray dampening systems
- Chapt. 4.34 Maintenance activities on dampening solution devices
- Chapt. 4.35 Maintenance activities on cylinder washing systems
- Chapt. 4.36 Maintenance activities on pump stands

4.1 Clean blanket cylinder

Requirements

- Production group / function group at standstill

Materials needed

- Soft cloth
- Automatic cylinder washing unit (optional)
- Cleaning agents approved by WIFAG
- Resistant rubber gloves
- Protective mask
- Reg. 3 Control elements

WARNING	**Risk of injury!** **Risk of being trapped and crushed** by rotating rollers and cylinders! => Turn operating mode switch to position *MAKEREADY*. => Turn printing couple only with the command *PLACE PLATES* or *LIFT OUT PLATES*. => Inch printing couple *FORWARD* or *BACK* only when nobody is in the danger zone.

CAUTION	**Machine damage!** Damage to the **system** due to corrosion! => Use only cleaning agents approved by WIFAG. => Mix the cleaning agent according to the instructions of the supplier. => Never use pure water for preliminary and after-washing.

Wash manually

1. Shake or mix the cleaning agent well.
2. Apply cleaning solution sparingly to the rubber blanket (4) (Fig. 1).
3. From the control panel, *INCH FORWARD* or *INCH BACK* the printing couple.
4. Clean rubber blanket (4) with a soft cloth.
5. Wipe rubber blanket (4) dry.

Automatic washing (terminal operation)

1. Turn operating mode switch to position *OPERATION*.
2. On the terminal, change to the Menu Printer \ Inking unit mask.
3. Select program.
4. Start program.
5. On the terminal, change to the Information mask.

Automatic washing (operation on central control console)

=> Start washing program on central control console.

Check rubber blanket

6. Turn operating mode switch to position *MAKEREADY*.
7. From the control panel, *INCH FORWARD* or *INCH BACK* the printing couple.
8. Check whether blankets are clean.
9. Check blankets (4) for damage and wear.
10. Turn operating mode switch to position *OPERATION*.

If the rubber blanket (4) is damaged or worn:

=> Replace rubber blanket (Chapt. 3.2 Replace rubber blankets / rubber blanket underlays in Reg. 17 Blanket cylinder).

Fig. 1 Cylinder

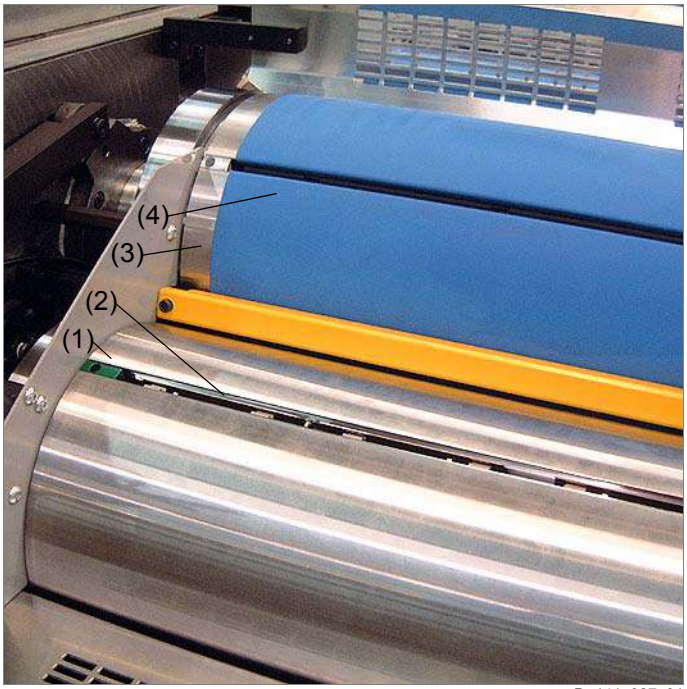

D_141_027_01

(1) Plate cylinder
(2) Plate tensioning device
(3) Blanket cylinder
(4) Blanket

4.2 Clean rubber rollers, oscillating drum, ink pickup roller

Requirements

- Production group / function group at standstill
- Plate cylinder fitted with printing plates (Chapt. 6.1 Manually insert and lift out printing plates in Reg. 4 operation)

Materials needed

- Cleaning agents approved by WIFAG
- Reg. 3 Control elements

CAUTION	**Machine damage!** Damage to the **system** due to corrosion! => Use only cleaning agents approved by WIFAG. => Mix the cleaning agent according to the instructions of the supplier. => Never use pure water for preliminary and after-washing.

Wash manually

1. On the terminal, change to the Menu Printer \ Wash \ Manual mask.
2. Carry out the steps in the required sequence.
3. On the terminal, change to the Information mask.

Wash automatically

1. On the terminal, change to the Menu Printer \ Wash mask.
2. Select program.
3. Start program.
4. On the terminal, change to the Information mask.

Check cleanliness.

=> Check whether blankets, oscillating drums and ink pickup roller are clean.

4.3 Check / clean portable ink fountain and ink level sensors

Requirements

- Production group / function group at standstill

Materials needed

- Soft cloth
- Cleaning agent
- Resistant rubber gloves
- Protective mask
- Hand-operated grease gun with grease No. 3 (Chapt. 1.3 Lubricant properties; Chapt. 1.4 Lubricant overview in Reg. 5 Lubrication)
- Reg. 3 Control elements

WARNING	
	Risk of injury! **Risk of being trapped and crushed** by rotating gear-wheels and rotating ink fountain roller! => Observe danger zone. => Keep hands at a safe distance from gearwheels and ink fountain roller. => Turn operating mode switch to position *MAKEREADY* when performing makeready work.

WARNING	
	Risk of injury! **Injury through cuts** from ink knives! => Observe the danger zone of the ink knife. => Touch ink knife only when wearing protective gloves.

Clean ink level sensors

CAUTION	
	Machine damage! Material damage to **component** by aggressive cleaning agents! => Only dry ink level sensors and clean with a soft cloth.

1. On the terminal, change to the Ink level mask.
2. Switch off ink supply.

3. Carefully dry clean the lenses of the ink level sensors (1) with (Fig. 2).

Fig. 2 Ink level sensor

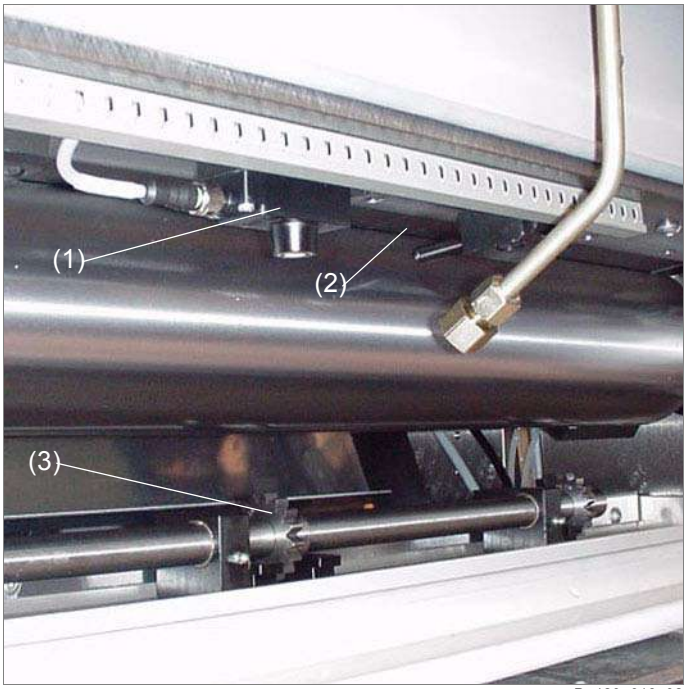

D_129_018_02

(1) Ink level sensor
(2) Ink knife
(3) Ink trough cross-member gearwheel

Check portable ink fountain

4. Check cleanliness of the portable ink fountain and check printing ink. Clean if necessary.

Clean portable ink fountain

5. Switch off ink supply on the terminal.
6. Remove portable ink fountain (1) from the ink trough cross-member (2) (Fig. 3); (Fig. 4).

DANGER	**Danger!** **Danger of explosion** due to toxic and explosive vapors! => Smoking is strictly prohibited in the immediate vicinity of fire hazardous cleaning agents. => Wear a protective mask and safety goggles when carrying out cleaning work. => Comply with the local statutory regulations for work safety.

WARNING	**Risk of injury!** **Environmental pollution** due to improperly disposed of residual ink! => Comply with the local statutory regulations.

7. Dispose of printing ink properly according to the statutory regulations.
8. Wash portable ink fountain (1) (Fig. 3); (Fig. 4).
9. Lubricate gearing at grease nipple (4) with 3 to 4 grease-gun shots.
10. Mount portable ink fountain (1).
11. Switch on ink supply at the terminal.
12. Turn operating mode switch to position *OPERATION*.

Fig. 3 Portable ink fountain mounted

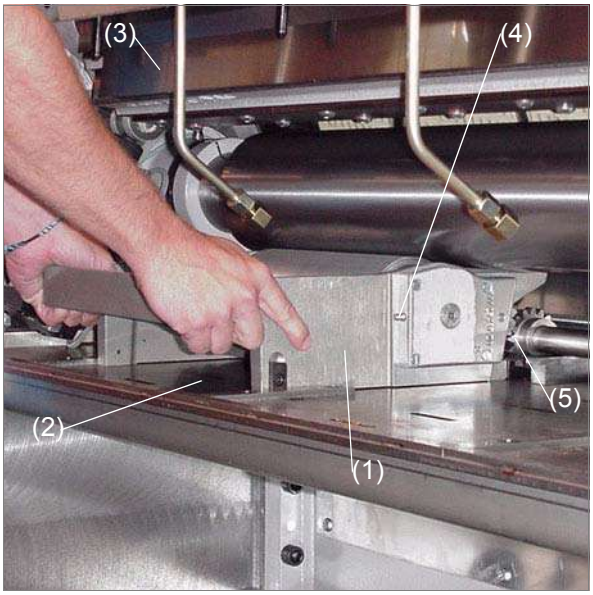

D_129_033_01

(1) Portable ink fountain
(2) Ink trough cross-member
(3) Ink knife
(4) Grease nipple
(5) Ink trough cross-member gearwheel

Fig. 4 Remove portable ink fountain

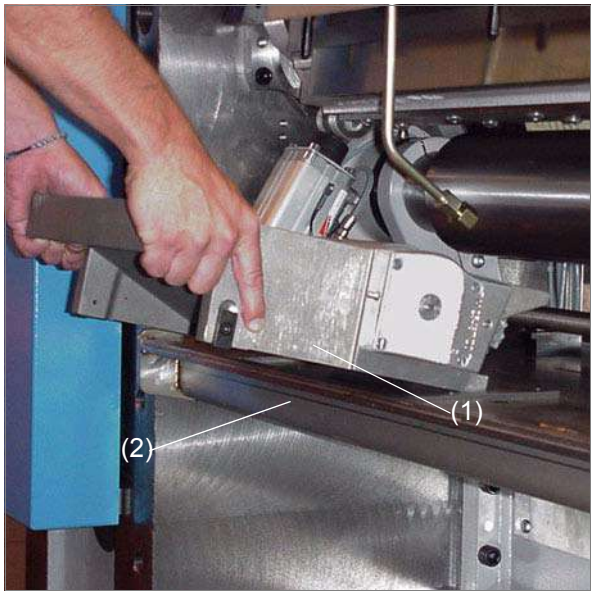

D_129_032_01

(1) Portable ink fountain
(2) Ink trough cross-member

4.4 Clean doctor blade on the roller washing device

Requirements

- Production group / function group at standstill

Materials needed

- Soft cloth
- Cleaning agent
- Resistant rubber gloves
- Warning signs *Work is in progress!*
- Reg. 3 Control elements

⚠ WARNING	**Risk of injury!** **Risk of being trapped and crushed** by rotating rollers and cylinders! => De-allocate function group from the production group at the terminal and electrically disable (push the *SAFE-STOP* pushbutton). => Place *Work in progress!* warning signs on the corresponding terminals and control panels.

1. Clean doctor blade (2) (Fig. 5).
2. Electrically enable function group with the *SAFE-STOP* pushbutton.
3. Remove *Work is in progress!* warning sign.

Fig. 5 Roller washing device

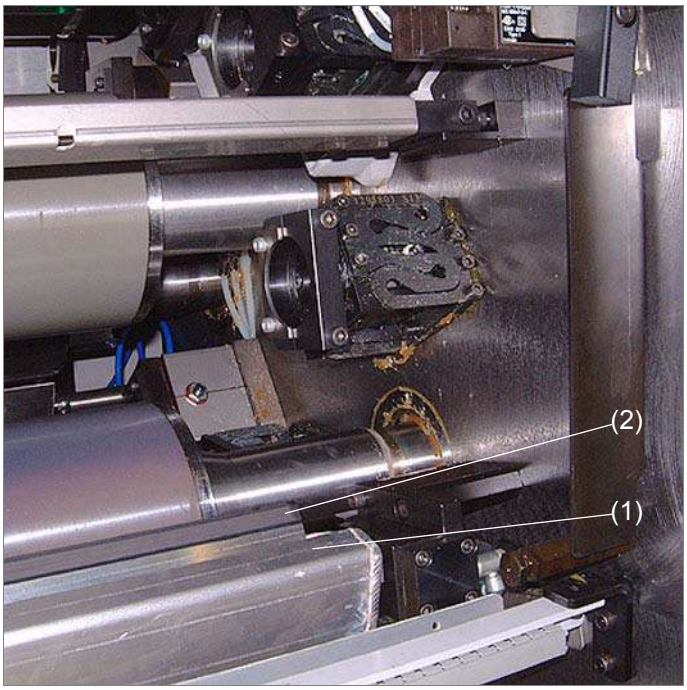

D_141_026_02

(1) Trough
(2) Doctor blade

4.5 Clean and conserve plate cylinder

Requirements

- Production group / function group at standstill
- No printing plates on the plate cylinder (Chapt. 6.1 Manually insert and lift out printing plates in Reg. 4 operation)

Materials needed

- Soft cloth
- Cleaning agents approved by WIFAG
- Resistant rubber gloves
- Protective mask
- Spray can with corrosion prevention No. 6 (Chapt. 1.3 Lubricant properties; Chapt. 1.4 Lubricant overview in Reg. 5 Lubrication)
- Reg. 3 Control elements

WARNING	**Risk of injury!** **Risk of being trapped and crushed** by rotating rollers and cylinders! => Turn operating mode switch to position *MAKEREADY*. => Turn printing couple only with the command *PLACE PLATES* or *LIFT OUT PLATES*. => Inch printing couple *FORWARD* or *BACK* only when nobody is in the danger zone.

CAUTION	**Machine damage!** Damage to the **system** due to corrosion! => Use only cleaning agents approved by WIFAG. => Mix the cleaning agent according to the instructions of the supplier. => Never use pure water for preliminary and after-washing.

CAUTION	**Machine damage!** Damage to the **cylinder surface** through contact with activator and printing plate cleaner! => Do not use activator and printing plate cleaner on the system.

Cleaning the plate cylinder

1. Shake or mix the cleaning agent well.
2. Apply cleaning solution sparingly to the plate cylinder (1) (Fig. 6).
3. From the control panel, *INCH FORWARD* or *INCH BACK* the printing couple.
4. Clean plate cylinder (1) with a soft cloth.
5. Wipe plate cylinder (1) dry.

Apply conservation agent to the plate cylinder

6. From the control panel, *INCH FORWARD* or *INCH BACK* the printing couple.
7. Evenly spray plate cylinder surface (1) with corrosion prevention No. 6 (Fig. 6).
8. Turn operating mode switch to position *OPERATION*.

Fig. 6 Cylinder

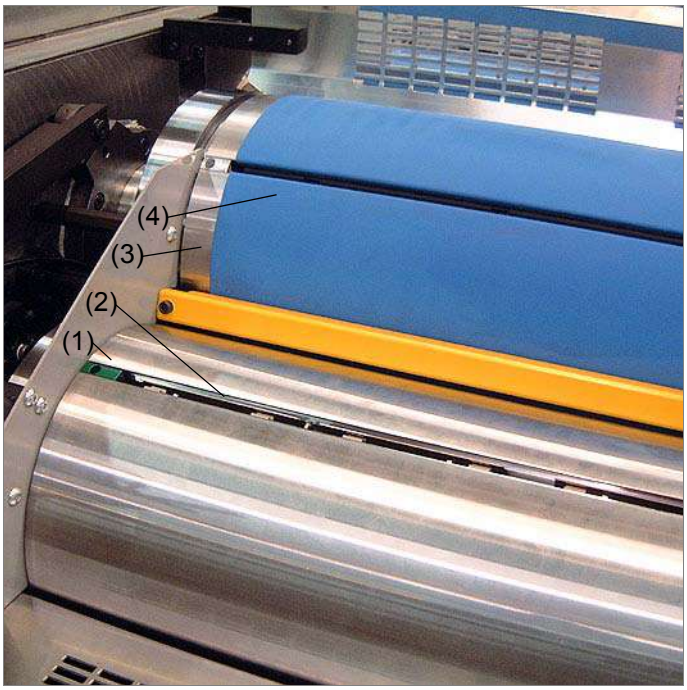

D_141_027_01

(1) Plate cylinder
(2) Plate tensioning device
(3) Blanket cylinder
(4) Blanket

4.6 Dry clean reflected light sensors

Requirements

- Production group / function group at standstill
- Read Chapt. 4.4 Working in the tunnel / mobile terminal in Reg. 2 Important for your safety.

Materials needed

- Protective rubber gloves
- Soft cloth
- Warning signs *Work is in progress!*

⚠ WARNING	**Risk of injury!** **Risk of being trapped and crushed** by rotating rollers and cylinders! => De-allocate function group from the production group at the terminal and electrically disable (push the *SAFE-STOP* pushbutton). => Place *Work in progress!* warning signs on the corresponding terminals and control panels.

1. Dry clean reflected light sensors (1) with a soft cloth (Fig. 7).
2. Electrically enable function group with the *SAFE-STOP* pushbutton.
3. Remove *Work is in progress!* warning sign.

Fig. 7 Reflected light sensor, below

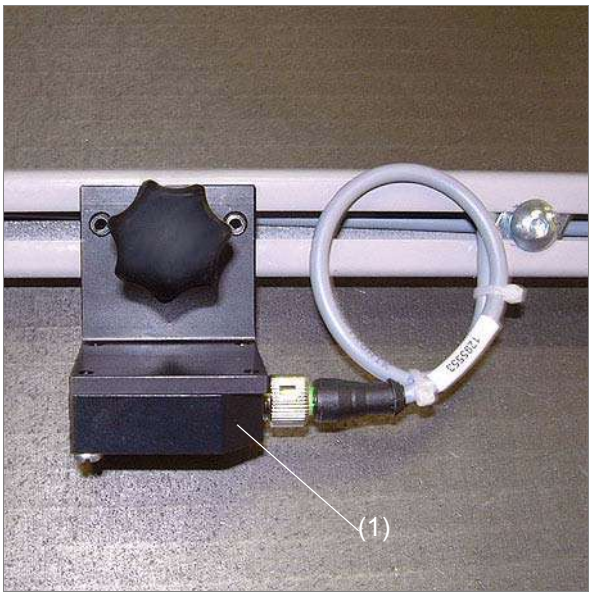

D_129_091_01

(1) Reflected light sensor

Fig. 8 Reflected light sensor, front

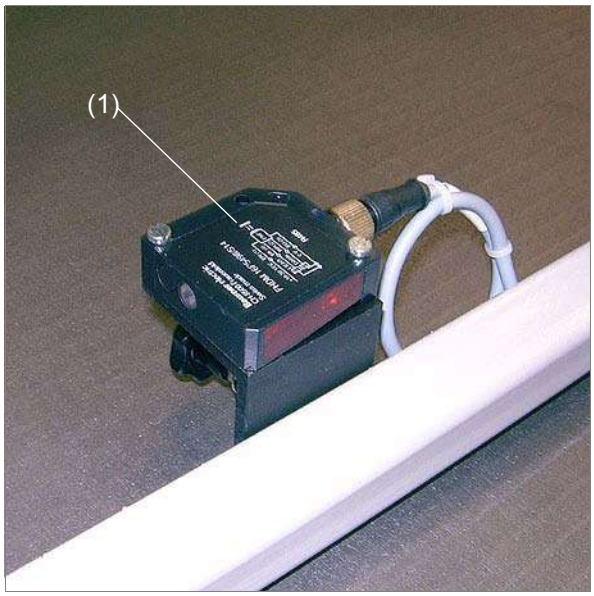

D_129_090_01

(1) Reflected light sensor

4.7 Inspecting / cleaning the fan-out roller

Requirements

- Production group / function group at standstill
- Read Chapt. 4.4 Working in the tunnel / mobile terminal in Reg. 2 Important for your safety.

Materials needed

- Soft cloth
- Cleaning agents approved by WIFAG
- Resistant rubber gloves
- Protective mask
- Reg. 3 Control elements

⚠ WARNING	**Risk of injury!** **Risk of being trapped and crushed** by rotating rollers and cylinders! => De-allocate function group from the production group at the terminal and electrically disable (push the *SAFE-STOP* pushbutton). => Place *Work in progress!* warning signs on the corresponding terminals and control panels.

⚠ CAUTION	**Machine damage!** Damage to the **system** due to corrosion! => Use only cleaning agents approved by WIFAG. => Mix the cleaning agent according to the instructions of the supplier. => Never use pure water for preliminary and after-washing.

1. Apply cleaning solution to the cloth sparingly (Fig. 9).
2. Clean and rub the fan-out roller (1) dry.
3. Electrically enable function group with the *SAFE-STOP* pushbutton.
4. Remove *Work is in progress!* warning sign.

Fig. 9 Fan-out compensator

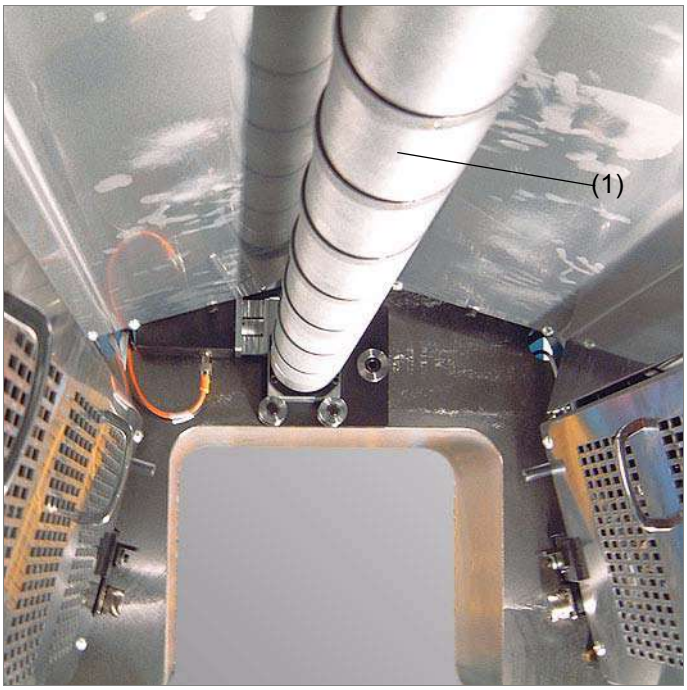

D_149_012_01

(1) Fan-out roller

4.8 Shut off the dampening solution supply

Requirements

- Production group / function group at standstill

Materials needed

- Documentation of the manufacturer in the *Suppliers' documentation* file

=> Switch off dampening solution supply according to the manufacturer's documentation.

4.9 Remove ink and paper dust

Requirements

- Production group / function group at standstill

Materials needed

- Soft cloth
- Cleaning agents approved by WIFAG
- Resistant rubber gloves
- Protective mask
- Warning signs *Work is in progress!*

⚠ WARNING	**Risk of injury!** **Risk of being trapped and crushed** by rotating rollers and cylinders! => De-allocate function group from the production group at the terminal and electrically disable (push the *SAFE-STOP* pushbutton). => Place *Work in progress!* warning signs on the corresponding terminals and control panels.

⚠ CAUTION	**Machine damage!** Damage to the **system** due to corrosion! => Use only cleaning agents approved by WIFAG. => Mix the cleaning agent according to the instructions of the supplier. => Never use pure water for preliminary and after-washing.

1. Remove and clean all screwed/bolted guards.
2. Remove ink and paper dust in the printing couple.
3. Install drive guards.
4. Electrically enable function group with the *SAFE-STOP* pushbutton.
5. Remove *Work is in progress!* warning sign.

4.10 Clean roller washing device

Requirements

- Production group / function group at standstill

Materials needed

- Soft cloth
- Wide brush
- Spatula
- Cleaning agent
- Resistant rubber gloves
- Protective mask
- Warning signs *Work is in progress!*
- Reg. 3 Control elements

WARNING	**Risk of injury!** **Risk of being trapped and crushed** by rotating rollers and cylinders! => De-allocate function group from the production group at the terminal and electrically disable (push the *SAFE-STOP* pushbutton). => Place *Work in progress!* warning signs on the corresponding terminals and control panels.

DANGER	**Danger!** **Danger of explosion** due to toxic and explosive vapors! => Smoking is strictly prohibited in the immediate vicinity of fire hazardous cleaning agents. => Wear a protective mask and safety goggles when carrying out cleaning work. => Comply with the local statutory regulations for work safety.

WARNING	**Risk of injury!** **Environmental pollution** due to improperly disposed of residual ink! => Comply with the local statutory regulations.

1. Lift out trough (1) (Fig. 10).
2. Dispose of printing ink properly according to the statutory regulations.
3. Wash trough (1).
4. Clean doctor blade (2).
5. Check doctor blade (2) for damage and wear.

If the doctor blade (4) is damaged or worn:

=> Replace doctor blade (Chapt. 3.3 Replacing doctor blade on the roller washing device in Reg. 18 Washing units).

6. Insert trough (1).
7. Electrically enable function group with the *SAFE-STOP* pushbutton.
8. Remove *Work is in progress!* warning sign.

Fig. 10 Roller washing device

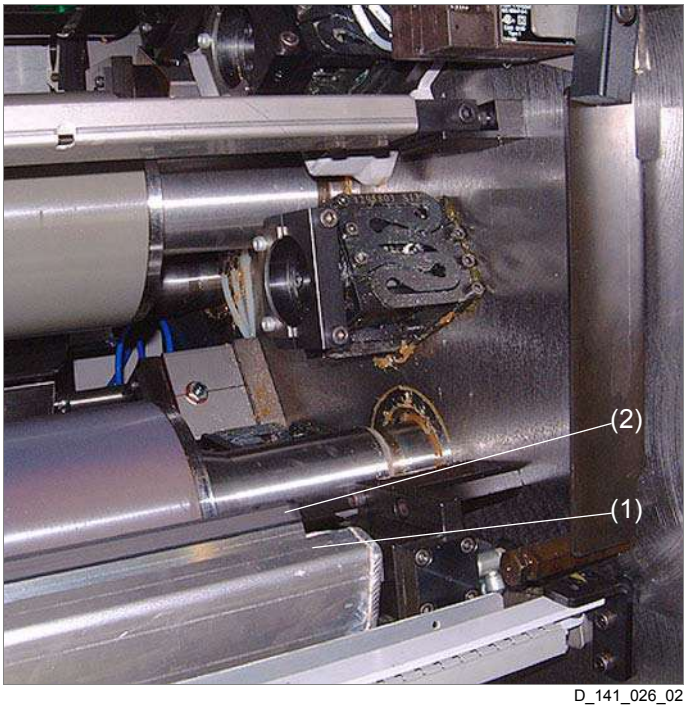

D_141_026_02

(1) Trough
(2) Doctor blade

4.11 Clean reflected light sensor with optical cleaner

Requirements

- Production group / function group at standstill
- Read Chapt. 4.4 Working in the tunnel / mobile terminal in Reg. 2 Important for your safety.

Materials needed

- Protective rubber gloves
- Optical cleaner
- Soft cloth
- Warning signs *Work is in progress!*

WARNING	**Risk of injury!** **Risk of being trapped and crushed** by rotating rollers and cylinders! => De-allocate function group from the production group at the terminal and electrically disable (push the *SAFE-STOP* pushbutton). => Place *Work in progress!* warning signs on the corresponding terminals and control panels.

CAUTION	**Machine damage!** Material damage to **component** by aggressive cleaning agents! => Do not use any cleaning agents containing cellulose thinner and similar products for cleaning.

1. Spray reflected light sensors (1) with optical cleaner and rub dry with a soft cloth (Fig. 7).
2. Electrically enable function group with the *SAFE-STOP* pushbutton.
3. Remove *Work is in progress!* warning sign.

Fig. 11 Reflected light sensor, below

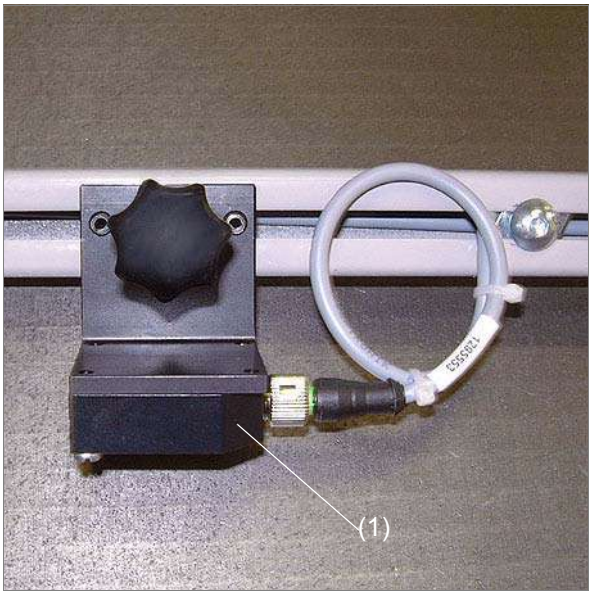

D_129_091_01

(1) Reflected light sensor

Fig. 12 Reflected light sensor, front

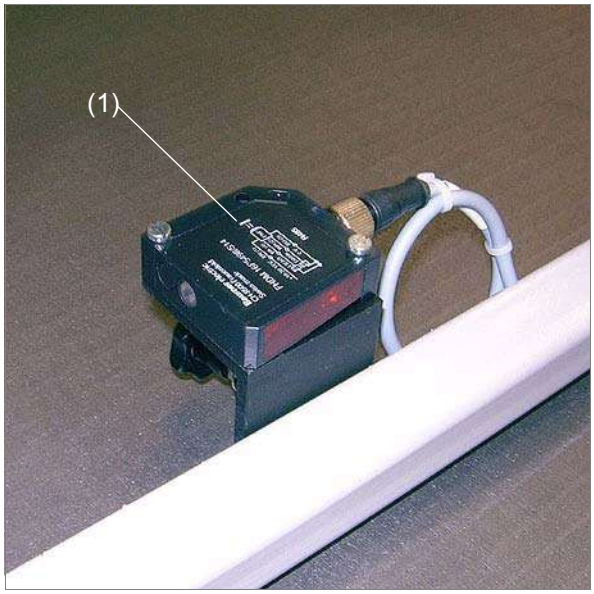

D_129_090_01

(1) Reflected light sensor

4.12 Clean ink fountain roller, ink knife, ink separators

Requirements

- Production group / function group at standstill
- All portable ink fountains are removed (Chapt. 4.1 Installing the portable ink fountain in Reg. 4 operation)

Materials needed

- Soft cloth
- Wide brush
- Spatula
- Cleaning agents approved by WIFAG
- Resistant rubber gloves
- Protective mask
- Special grease: e.g. Blasolube 540, BP Energrease LS3
- Reg. 3 Control elements

⚠ WARNING	**Risk of injury!** **Risk of being trapped and crushed** by swiveling ink knife bar! => Keep hands at a safe distance from the ink knife bar. => Swivel ink knife bar only when no persons are in the danger zone.

⚠ WARNING	**Risk of injury!** **Injury through cuts** from ink knives! => Observe the danger zone of the ink knife. => Touch ink knife only when wearing protective gloves.

⚠ WARNING	**Risk of injury!** **Risk of being trapped and crushed** by rotating gearwheels and rotating ink fountain roller! => Observe danger zone. => Keep hands at a safe distance from gearwheels and ink fountain roller. => Turn operating mode switch to position *MAKEREADY* when performing makeready work.

CAUTION	**Machine damage!** Damage to the **system** due to corrosion! => Use only cleaning agents approved by WIFAG. => Mix the cleaning agent according to the instructions of the supplier. => Never use pure water for preliminary and after-washing.

Clean ink fountain roller

1. On the terminal, change to the Ink level mask.
2. Switch off ink supply.
3. Mount ink fountain roller washing unit (1) (Fig. 13); (Fig. 14).
4. Turn operating mode switch to position *OPERATION*.
5. On the terminal, change to the Menu Printer \ Inking unit mask.
6. Switch on *WASH INK FOUNTAIN ROLLER*.
7. Spray ink fountain roller (3) with cleaning agent.
8. Skim ink from the ink fountain roller (3).
9. Switch off *WASH INK FOUNTAIN ROLLER*.
10. Lift out ink fountain roller washing unit (1).

Fig. 13 Deploying the ink fountain roller washing unit

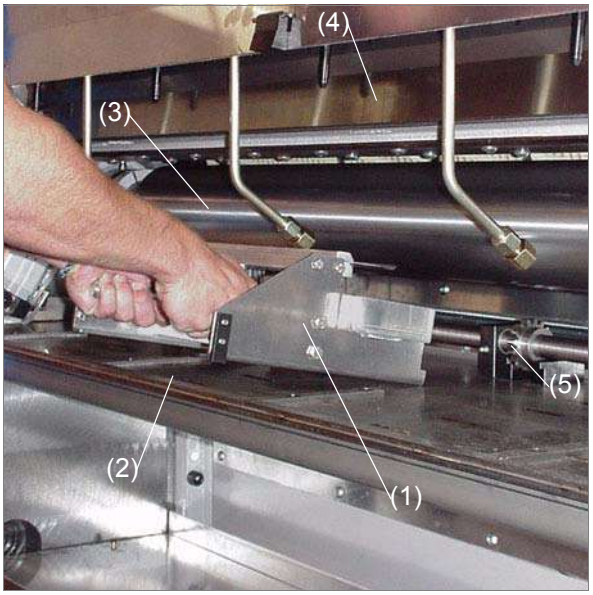

D_129_034_01

(1) Ink fountain roller washing unit
(2) Ink trough cross-member
(3) Ink fountain roller
(4) Ink knife
(5) Ink trough cross-member gearwheel

Fig. 14 Skim ink fountain roller

D_129_035_01

(1) Ink fountain roller washing unit
(2) Ink trough cross-member

Clean ink knife and ink separators

11. Turn operating mode switch to position *MAKEREADY*.
12. On the terminal, change to the Menu Printer \ Inking unit mask.
13. Swing away ink knife bar.
14. Pull off ink separators (1) and clean (Fig. 15).
15. Replace special grease (2) if greatly soiled (Fig. 16).
16. Carefully clean ink knife (2) with cloth (Fig. 15).
17. Mount ink separators (1).
18. Swing on ink knife bar.
19. Replace portable ink fountain.
20. On the terminal, change to the Ink level mask.
21. Switch on ink supply.
22. On the terminal, change to the Information mask.
23. Turn operating mode switch to position *OPERATION*.

Fig. 15 Insert ink separator

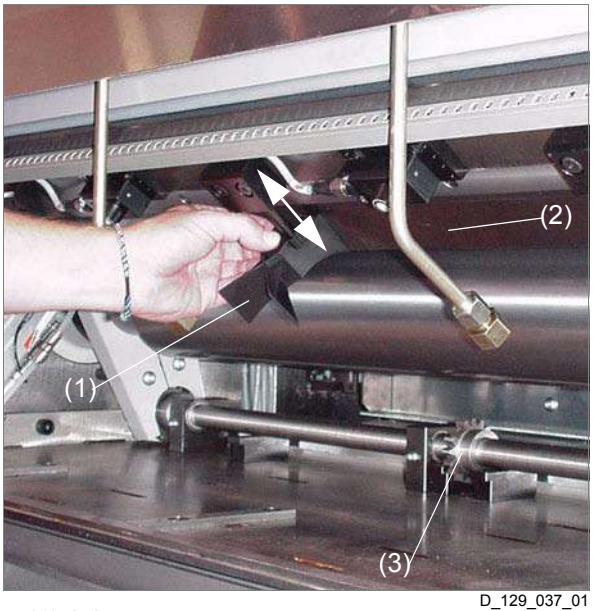

D_129_037_01

(1) Ink separator
(2) Ink knife
(3) Ink trough cross-member gearwheel

Fig. 16 De-grease ink separator

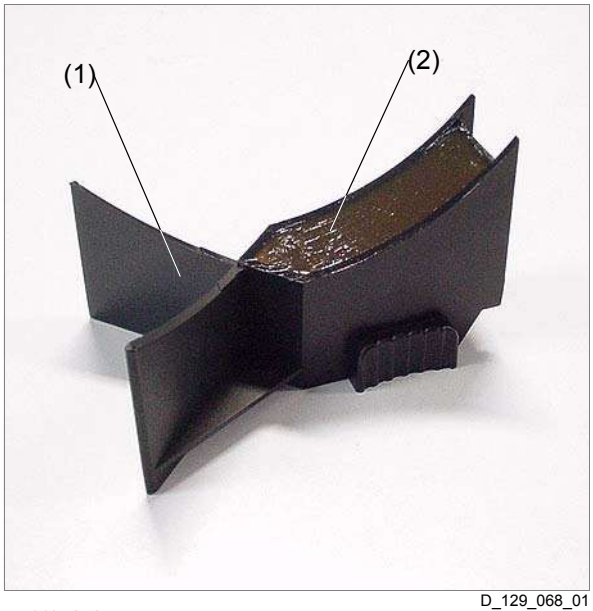

D_129_068_01

(1) Ink separator
(2) Special grease: e.g. Blasolube 540, BP Energrease LS3

Clean ink fountain roller washing unit

DANGER	**Danger!** **Danger of explosion** due to toxic and explosive vapors! => Smoking is strictly prohibited in the immediate vicinity of fire hazardous cleaning agents. => Wear a protective mask and safety goggles when carrying out cleaning work. => Comply with the local statutory regulations for work safety.

WARNING	**Risk of injury!** **Environmental pollution** due to improperly disposed of residual ink! => Comply with the local statutory regulations.

1. Lift out trough (3) (Fig. 17).
2. Dispose of printing ink properly according to the statutory regulations.
3. Wash trough (3).
4. Clean doctor blade (4).
5. Check doctor blade (4) for damage and wear.

If the doctor blade (4) is damaged or worn:

=> Replace doctor blade (Chapt. 3.2 Replacing doctor blade on the ink fountain roller washing unit in Reg. 18 Washing units).

Fig. 17 Ink fountain roller washing unit

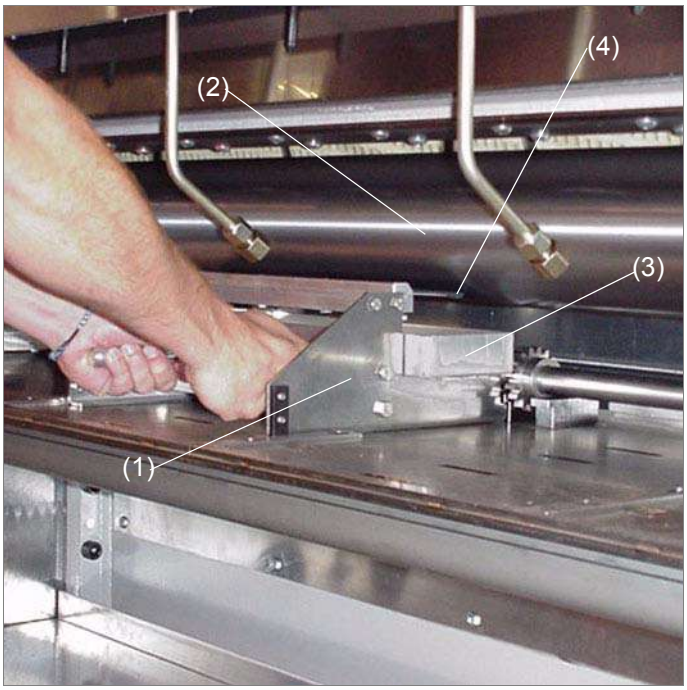

D_129_035_01

(1) Ink fountain roller washing unit
(2) Ink fountain roller
(3) Trough
(4) Doctor blade

4.13 Regenerate rubber rollers

Requirements

- Production group / function group at standstill
- Basic cleaning of rubber rollers performed (Chapt. 4.2 Clean rubber rollers, oscillating drum, ink pickup roller)

Materials needed

- Soft cloth
- Use regenerating agents approved by WIFAG (paste, shampoo)
- Spatula (when using paste)
- Resistant rubber gloves
- Protective mask
- Reg. 3 Control elements

WARNING	**Risk of injury!** **Risk of being trapped and crushed** by rotating rollers and cylinders! => Turn operating mode switch to position *MAKEREADY*. => Turn printing couple only with the command *PLACE PLATES* or *LIFT OUT PLATES*. => Inch printing couple *FORWARD* or *BACK* only when nobody is in the danger zone.

CAUTION	**Machine damage!** Damage to **roller rubbers** due to incorrect regenerating agent! => Use only regenerating agents approved by WIFAG. => Use regenerating agent according to the instructions of the supplier only.

1. Check the cleanliness of the rubber rollers and if necessary clean edges and recesses again.
2. Apply regenerating agent according to the instructions of the supplier.
3. From the control panel, *INCH FORWARD* or *INCH BACK* the printing couple.
4. Let regenerating agent take effect as instructed by the supplier.
5. Turn operating mode switch to position *OPERATION*.

4.14 Re-clean oscillating drums

Requirements

- Production group / function group at standstill
- Basic cleaning of oscillating drums performed (Chapt. 4.2 Clean rubber rollers, oscillating drum, ink pickup roller)

Materials needed

- Soft cloth
- Cleaning agents approved by WIFAG
- Resistant rubber gloves
- Protective mask
- Reg. 3 Control elements

WARNING	
	Risk of injury! **Risk of being trapped and crushed** by rotating rollers and cylinders! => Turn operating mode switch to position *MAKEREADY*. => Turn printing couple only with the command *PLACE PLATES* or *LIFT OUT PLATES*. => Inch printing couple *FORWARD* or *BACK* only when nobody is in the danger zone.

CAUTION	
	Machine damage! Damage to the **system** due to corrosion! => Use only cleaning agents approved by WIFAG. => Mix the cleaning agent according to the instructions of the supplier. => Never use pure water for preliminary and after-washing.

1. Check the cleanliness of the oscillating drums and if necessary clean edges again.
2. Turn operating mode switch to position *OPERATION*.

4.15 Adjust sidelay register

Requirements

- Production group / function group at standstill
- Blanket cylinder is thrown off (Menu Printer \ Offset sequences \ Manual)

Materials needed

- Reg. 3 Control elements

CAUTION	**Machine damage!** Damage to **plate cylinder bearing** due to excess load! => Turn printing couple *DURING* adjustment of the sidelay register on the control panel with the pushbutton *INSERT PLATES* or *LIFT OUT PLATES*.

1. Turn operating mode switch to position *MAKEREADY*.
2. On the terminal, change to the Menu Test \ Sidelay register mask.
3. Switch on *TEST MODE*.
4. With the *INSERT PLATES* pushbutton pressed down, adjust the sidelay register several times between the positions *MIN* (- 1.5 mm) and *MAX* (+ 1.5 mm) .
5. Switch off *TEST MODE*.
6. On the terminal, change to the Information mask.
7. Turn operating mode switch to position *OPERATION*.

4.16 Adjust the fan-out compensator

Requirements

- Production group / function group at standstill

Materials needed

- Reg. 3 Control elements

WARNING	
	Risk of injury! **Risk of being trapped and crushed** by moving fan-out roller! => Before entering each command at a terminal or control panel, make certain that nobody is in the danger zone.

1. On the terminal, change to the Menu Test \ Fan-out roller mask.
2. Switch on *TEST MODE*.
3. Move fan-out roller several times between the *MIN* (0%) and *MAX* (100%) positions.
4. Switch off *TEST MODE*.
5. On the terminal, change to the Information mask.

4.17 Clean line system of the dampening solution supply

Requirements

- Production group / function group at standstill

Materials needed

- Documentation of the manufacturer in the *Suppliers' documentation* file
- Cleaning agents approved by WIFAG
- Resistant rubber gloves
- Protective goggles
- Protective mask

WARNING	**Risk of injury!** **Damage to eyes** due to dampening solution escaping at high pressure (4-6 bar)! => Close stop cock between dampening solution device and feed line. => Switch off dampening solution device and place *Work is in progress!* warning sign. => Wear protective goggles and protective gloves. => Observe the safety datasheets of the dampening solution manufacturer.

WARNING	**Risk of injury!** **Environmental pollution** due to improperly disposed of dampening solution! => Comply with the local statutory regulations.

1. Rinse out line system in accordance with the manufacturer's documentation.
2. Remove *Work is in progress!* warning sign.

4.18 Clean ink pickup roller and stops

Requirements

- Production group / function group at standstill
- All portable ink fountains are removed (Chapt. 4.1 Installing the portable ink fountain in Reg. 4 operation)
- Ink pickup roller is thrown off (Menu Printer \ Offset sequences \ Manual)
- Basic cleaning of ink pickup roller performed (Chapt. 4.2 Clean rubber rollers, oscillating drum, ink pickup roller)

Materials needed

- Soft cloth
- Cleaning agents approved by WIFAG
- Resistant rubber gloves
- Protective mask
- Warning signs *Work is in progress!*

⚠ WARNING	**Risk of injury!** **Risk of being trapped and crushed** by rotating rollers and cylinders! => De-allocate function group from the production group at the terminal and electrically disable (push the *SAFE-STOP* pushbutton). => Place *Work in progress!* warning signs on the corresponding terminals and control panels.

⚠ CAUTION	**Machine damage!** Damage to the **system** due to corrosion! => Use only cleaning agents approved by WIFAG. => Mix the cleaning agent according to the instructions of the supplier. => Never use pure water for preliminary and after-washing.

1. Check the cleanliness of the ink pickup roller (1) and if necessary clean roller, edges and recesses and/or insert rings (Fig. 18).
2. Clean arrester pins (1) and contact surfaces on cast iron lever (2) (Fig. 19).
3. Electrically enable function group with the *SAFE-STOP* pushbutton.
4. Remove *Work is in progress!* warning sign.

Fig. 18 Ink pickup roller

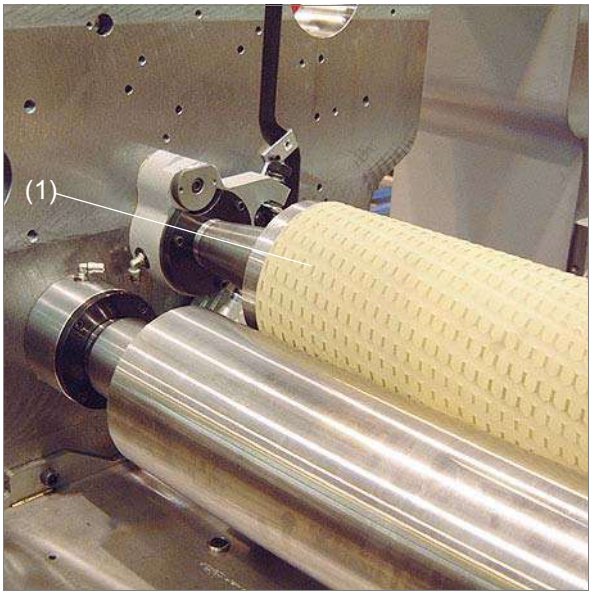

D_149_007_01

(1) Ink pickup roller

Fig. 19 Ink pickup roller throwon

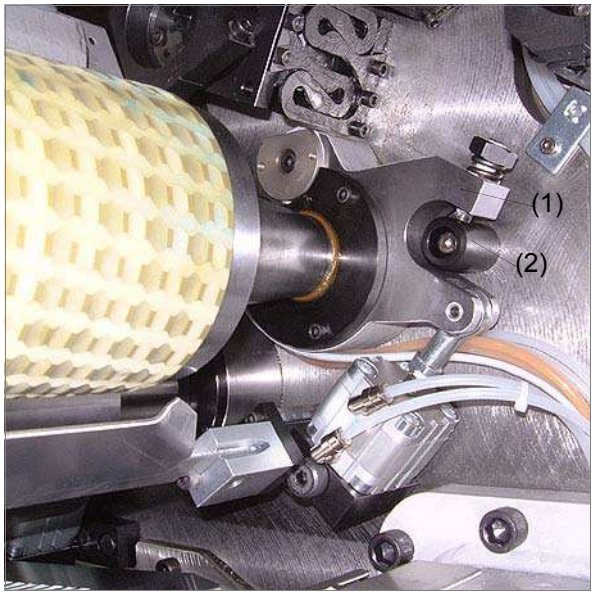

D_149_006_01

(1) Arrester pin
(2) Cast iron lever

4.19 Check pneumatic system

Requirements

- Production group / function group at standstill
- Read Chapt. 4.4 Working in the tunnel / mobile terminal in Reg. 2 Important for your safety.

Materials needed

- Warning signs *Work is in progress!*
- Pneumatic system schematic (Chapt. 1.3 Pneumatic system schematics in Reg. 8 Pneumatic system)
- Supplied universal key
- Fork wrench
- Leak-finding spray
- Loctite 245

DANGER	**Danger!** **Operation** of the function group by others! => De-allocate function group from the production group at the terminal and electrically disable (push the *SAFE-STOP* pushbutton). => Place Work in progress! warning signs on the corresponding terminals and control panels. => Before entering each command at a terminal or control panel, make certain that nobody is in the danger zone.

1. Check pneumatic components and lines for leaks.

If leaks are present:

=> Reduce pressure on the concerned filter-regulator-lubricator unit to 0 bar (Chapt. 4.1.3 Setting the filter-regulator-lubricator unit in Reg. 8 Pneumatic system in the *System* file).

=> Replace seals on pneumatic components with leaks or, if necessary, replace pneumatic components (Chapt. 3 Replace components in Reg. 8 Pneumatic system in the *System* file).

2. Electrically enable function group with the *SAFE-STOP* pushbutton.
3. Remove *Work is in progress!* warning sign.

4.20 Check bearing of printing couple drive

Requirements

- Production group / function group at standstill

Materials needed

- Reg. 3 Control elements

1. On the terminal, change to the Menu Printer \ Inking unit mask.
2. Disengage inking unit clutch.
3. On the terminal, change to the Menu Test \ Drives mask.
4. Retract blanket cylinder.
5. Scan the entire speed range and check for bearing noise and increased temperature.
6. On the terminal, change to the Information mask.

In the event of unusual bearing noises or high temperatures:

=> Contact WIFAG.

4.21 Setting timing belt tensions

Requirements

- Production group / function group at standstill
- Blanket cylinder is thrown off (Menu Printer \ Offset sequences \ Manual)
- Measurements of the timing belt tension are to be carried out only when the subassembly is in the cold state; i.e. the wall should have an ideal temperature of 20°C in the region of the drive (min. 18°C and max. 30°C).
- If the timing belt tension drops below 56 Hz , it is absolutely necessary to re-tension the timing belt

Materials needed

- Allen key set
- Allen key 14 mm
- Fork wrench size 24
- Ratchet with hex key adaptor size 24
- Torque wrench with a 14 mm Allen socket
- Torque wrench with 0.20 in Allen socket
- Frequency measuring device
- Warning sign *Work is in progress!*

Tab. 8 Timing belt tension setting values

Time of the setting	Timing belt tension
tensioning new timing belt the first time	66 - 74 Hz
Re-tension new timing belt after 8 hours	56 - 64 Hz
Re-tension new timing belt after 500 hours	56 - 64 Hz
Re-tension every six months	56 - 64 Hz

DANGER

Danger!
Operation of the function group by others!

=> De-allocate function group from the production group at the terminal and electrically disable (push the *SAFE-STOP* pushbutton).

=> Place Work in progress! warning signs on the corresponding terminals and control panels.

=> Before entering each command at a terminal or control panel, make certain that nobody is in the danger zone.

⚠ WARNING	**Risk of injury!** **Risk of being trapped and crushed** by rotating timing belt pulleys and timing belts! => Keep hands at a safe distance from timing belts and timing belt pulleys.
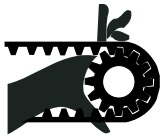	

Measure timing belt tension

1. Remove cover (1) (Fig. 20).
2. Visually check the surface of the inner side of the timing belt.

If the surface is damaged or greatly worn:

=> Replace timing belt (Chapt. 3.3 Replacing the timing belt in Reg. 13 Printing couple drive).

3. Position microphone (1) with the magnet holder (2) at the center of the belt strand and about 5 mm away from the timing belt (3) (Fig. 21).

Fig. 20 Enclosure, side II

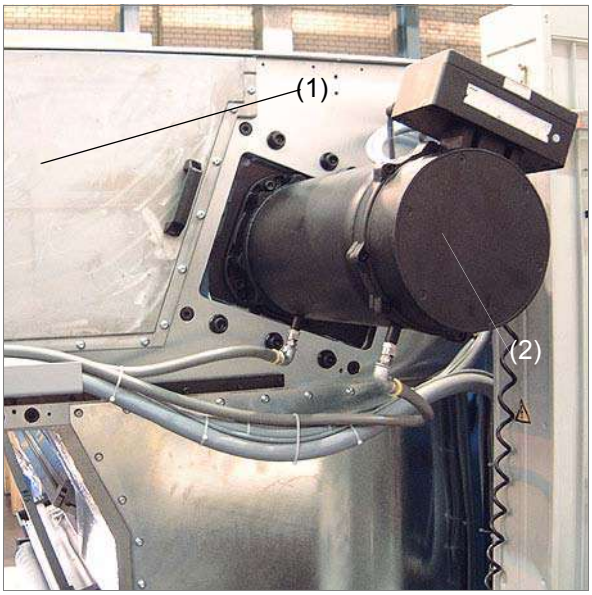

D_147_005_01

(1) Cover
(2) printing couple drive

Fig. 21 Position microphone

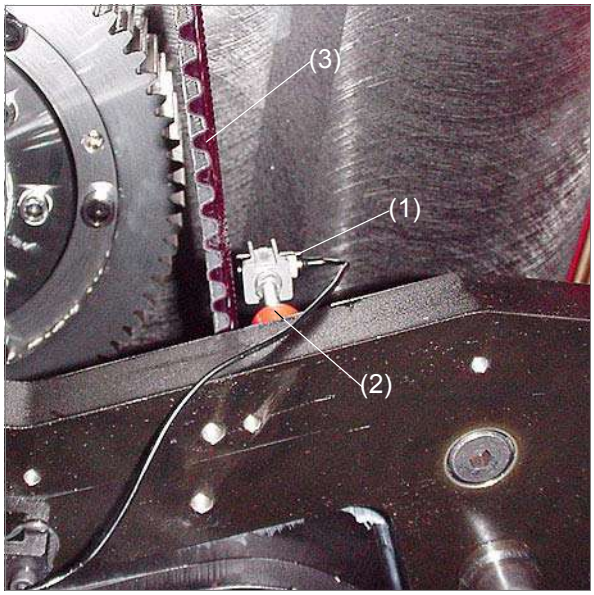

D_129_074_01

(1) Microphone
(2) Magnet holder
(3) Timing belt

4. Plug in microphone (1) on the measuring device (Fig. 22).
5. Switch on measuring device on key (2).
6. Press the *SELECT* key (4) until *no. 0* appears in the display (5).
7. Press the *MASS* key (6) and enter the value M 7.9 g/m.
8. Press the *WIDTH* key (7) and enter the value W 70 mm/#R.
9. Press the *SPAN* key (8) and enter the value S 485 mm.

Note

The setting values above for *MASS*, *WIDTH* and *SPAN* are standard settings and have no influence on measurements in *Hz*! These values are only for measuring in *Nm* and therefore do not have to be adapted to the concerned timing belt.

10. Press the *FREQUENCY SELECTION* key (9) until *Hz* appears in the display (5).
11. Press the *MEASUREMENT* key (10); the green LED (11) must flash.
12. Lightly tap timing belt with fork wrench and read display (5).

If the value in the display is indicated in Newton (N):

=> Press the *Frequency selection* (9) key.

Note

For further measurements at the same timing belt or if the message ERROR REMEASURE appears -- red LED (12) lights -- it will no longer be necessary to press the key (10) beforehand.

Fig. 22 Timing belt tension measuring device

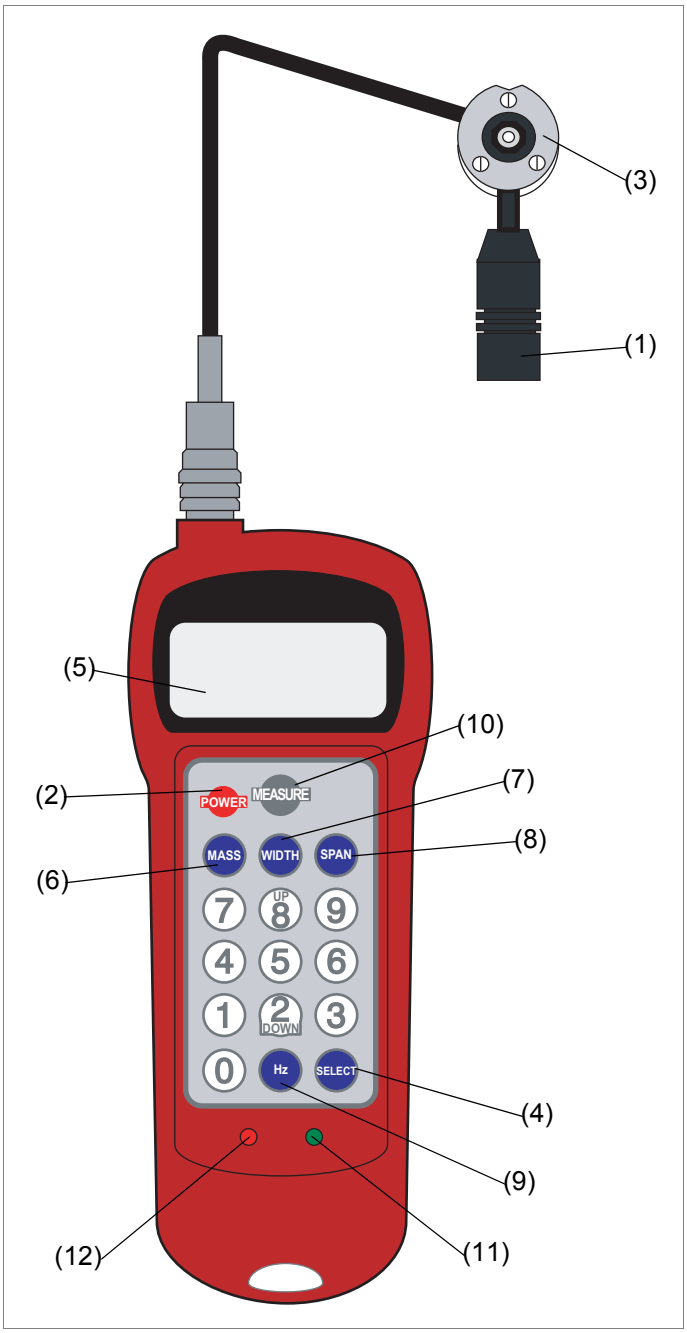

(1) Microphone
(2) ON/OFF key
(3) Magnet holder
(4) SELECT key
(5) Display
(6) MASS key (belt weight)
(7) WIDTH key (belt width)
(8) SPAN key (belt strand)
(9) Frequency selection key
(10) Measurement key
(11) Green LED
(12) Red LED

Set timing belt tension

13. Loosen retaining screws (1) of both guide rails (Fig. 23).
14. Tighten the four outer retaining screws (1) with 40 Nm.
15. Slacken locknuts (1) and turn back adjusting screw (2) (Fig. 24).
16. Set timing belt tension on the adjusting screw (4) (Tab. 8 Timing belt tension setting values).
17. Inch blanket cylinder forward in 90° steps through three complete revolutions and measure the belt tension after each step.

18. Turn adjusting screw (2) to the stop and lightly tighten (Fig. 24).
19. Tighten retaining screws (1) in a crosswise manner with a tightening torque of 200 Nm (Fig. 23).

Note

Retaining screws (1) that are hidden by the cooling water connection on the drive and cannot be tightened with the torque wrench can be tightened with a normal Allen key.

20. Tighten adjusting screws (2) and lock nuts (1) (Fig. 24).

Fig. 23 Guide plate

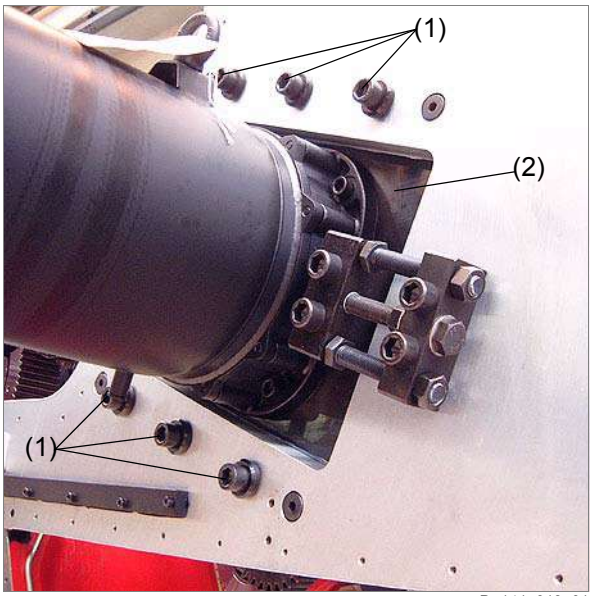

D_141_018_01

(1) Retaining screw
(2) Guide plate

Fig. 24 Tensioning device

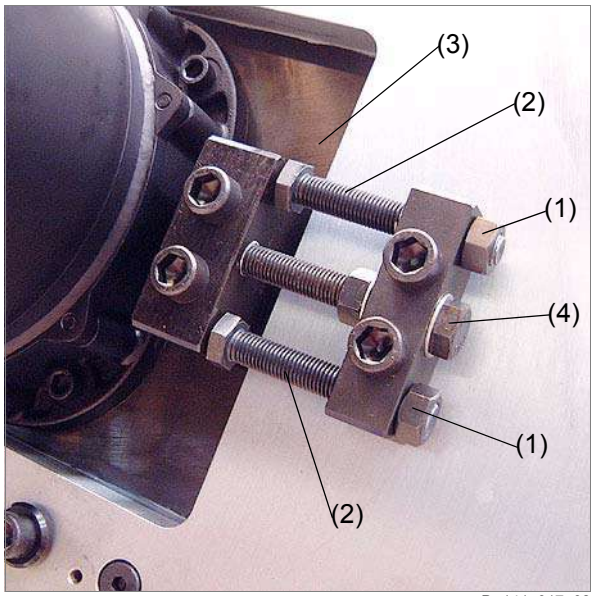

D_141_017_02

(1) Locknut
(2) Adjusting screw
(3) Guide plate
(4) Adjusting screw

21. Inch forward blanket cylinder by 1 revolution.
22. Check timing belt tension once more and correct if necessary.
23. Check the pneumatic cylinder for the inking unit clutch for leaks (Chapt. 4.19 Check pneumatic system).
24. Fit cover (1) on printing couple wall side II and tighten with a tightening torque of 4 Nm (Fig. 20).
25. Electrically enable function group with the *SAFE-STOP* pushbutton.
26. Remove *Work is in progress!* warning sign.

> The timing belt tension is set.

4.22 Conserve inner sides of wall

Requirements

- Production group / function group at standstill
- Inner sides of wall thoroughly cleaned

Materials needed

- Warning signs *Work is in progress!*
- Soft cloth
- Resistant rubber gloves
- Protective mask
- 1 spray can of METAFLUX 70-81 anti-seize agent per bridge

DANGER	**Danger!** **Operation** of the function group by others! => De-allocate function group from the production group at the terminal and electrically disable (push the *SAFE-STOP* pushbutton). => Place Work in progress! warning signs on the corre-sponding terminals and control panels. => Before entering each command at a terminal or control panel, make certain that nobody is in the danger zone.

WARNING	**Risk of injury!** Improper use of anti-seize agent spray can injure **eyes** and **skin**. => Wear a protective mask and safety goggles. => Wear protective gloves. => Comply with local statutory guidelines concerning safety at the workplace.

CAUTION	**Machine damage!** Anti-friction spray can damage **rubber rollers, bearer rings, roller bearings and rubber blankets**! => Do not spray anti-friction spray on rubber rollers, bearer rings, or rubber blankets. => Do not spray directly onto roller bearings.

1. Thoroughly spray inner walls sides I and II in the area of the dampening units. (do not spray directly spray onto roller bearings) (Fig. 25).
2. Electrically enable function group with the *SAFE-STOP* pushbutton.
3. Remove *Work is in progress!* warning sign.

Fig. 25 Conserve inner walls

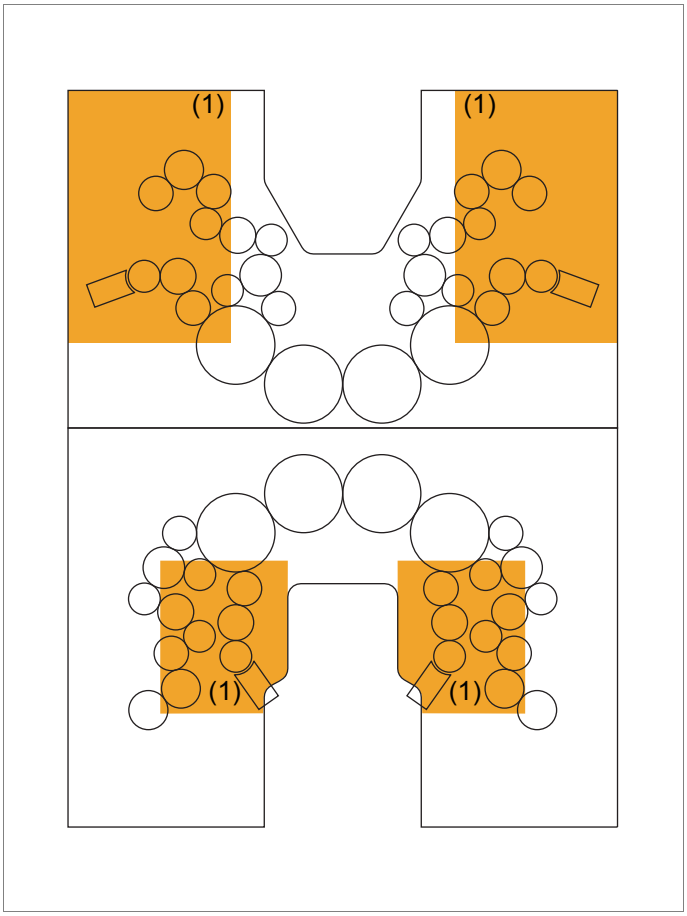

(1) Side I and side II surfaces to treat

4.23 Clean plate tensioning device

Requirements

- Production group / function group at standstill

Materials needed

- Soft cloth
- Cleaning agents approved by WIFAG
- Spray can with corrosion prevention No. 6 (Chapt. 1.3 Lubricant properties; Chapt. 1.4 Lubricant overview in Reg. 5 Lubrication)
- Resistant rubber gloves
- Protective mask
- Warning signs *Work is in progress!*
- Chapt. 4 Basic settings in Reg. 16 Plate cylinder

WARNING	**Risk of injury!** **Risk of being trapped and crushed** by rotating rollers and cylinders! => De-allocate function group from the production group at the terminal and electrically disable (push the *SAFE-STOP* pushbutton). => Place *Work in progress!* warning signs on the corresponding terminals and control panels.

CAUTION	**Machine damage!** Damage to the **system** due to corrosion! => Use only cleaning agents approved by WIFAG. => Mix the cleaning agent according to the instructions of the supplier. => Never use pure water for preliminary and after-washing.

1. Remove plate tensioning device (2) (Fig. 26); (Chapt. 4 Basic settings in Reg. 16 Plate cylinder).
2. Clean plate cylinder lockup slot.
3. Spray plate cylinder lockup slot sparingly with corrosion prevention No. 6.
4. Clean plate tensioning device (2).
5. Spray plate tensioning device (2) sparingly with corrosion prevention No. 6.
6. Install plate tensioning device (2).

7. Electrically enable function group with the *SAFE-STOP* pushbutton.
8. Remove *Work is in progress!* warning sign.

Fig. 26 Cylinder

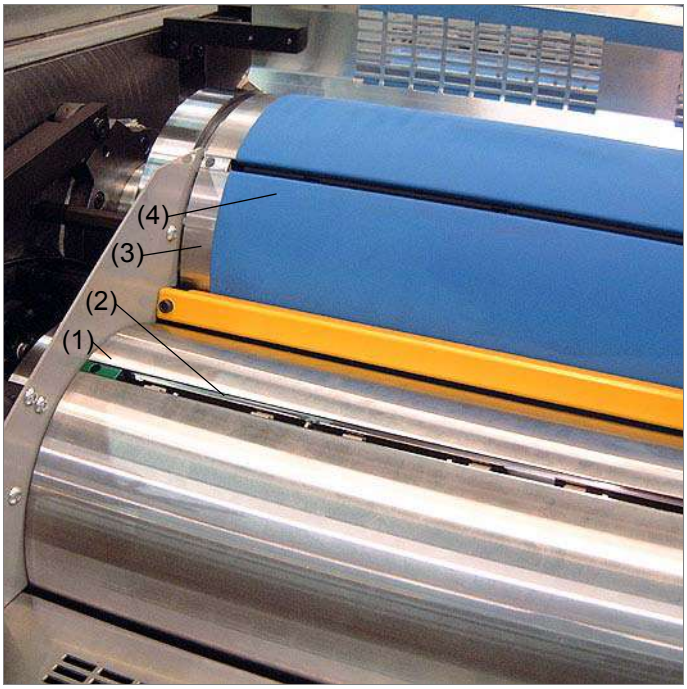

D_141_027_01

(1) Plate cylinder
(2) Plate tensioning device
(3) Blanket cylinder
(4) Blanket

4.24 Clean stops of ink knife bar throwon

Requirements

- Production group / function group at standstill
- Irregular ink film on the ink fountain roller

Materials needed

- Soft cloth
- Cleaning agents approved by WIFAG
- Resistant rubber gloves
- Warning signs *Work is in progress!*
- Reg. 3 Control elements

WARNING	
	Risk of injury! **Risk of being trapped and crushed** by rotating rollers and cylinders! => De-allocate function group from the production group at the terminal and electrically disable (push the *SAFE-STOP* pushbutton). => Place *Work in progress!* warning signs on the corresponding terminals and control panels.

WARNING	
	Risk of injury! **Risk of being trapped and crushed** by swiveling ink knife bar! => Keep hands at a safe distance from the ink knife bar. => Swivel ink knife bar only when no persons are in the danger zone.

WARNING	
	Risk of injury! **Injury through cuts** from ink knives! => Observe the danger zone of the ink knife. => Touch ink knife only when wearing protective gloves.

CAUTION	**Machine damage!** Damage to the **system** due to corrosion! => Use only cleaning agents approved by WIFAG. => Mix the cleaning agent according to the instructions of the supplier. => Never use pure water for preliminary and after-washing.

1. On the terminal, change to the Ink level mask.
2. Switch off ink supply.
3. On the terminal, change to the Menu Printer \ Inking unit mask.
4. Swing away ink knife bar.
5. Electrically disable function group with the *SAFE-STOP* pushbutton.
6. Clean dancer contact surface (1) and arrester screw (2) (Fig. 27).
7. Electrically enable function group with the *SAFE-STOP* pushbutton.
8. Swing on ink knife bar.
9. On the terminal, change to the Information mask.
10. Remove *Work is in progress!* warning sign.

Fig. 27 Ink knife bar stops

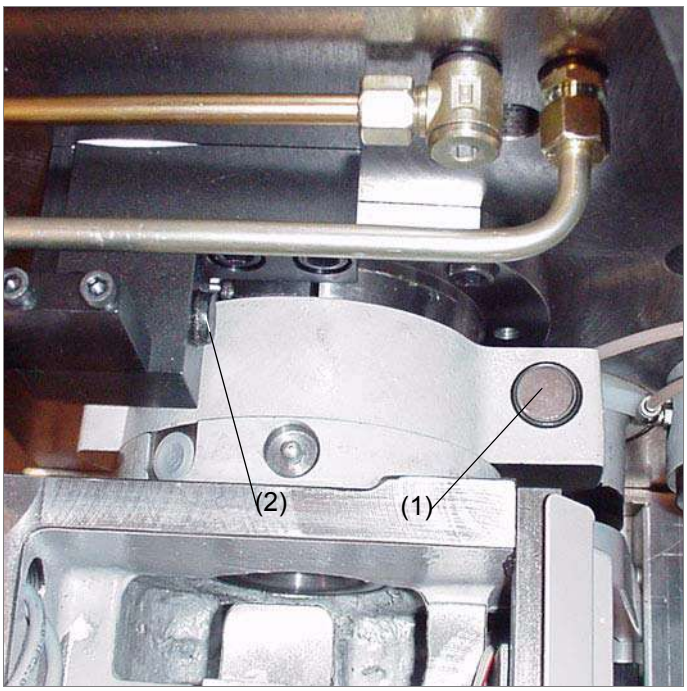

D_129_070_01

(1) Dancer contact surface
(2) Arrester screw

4.25 Clean measuring head of color register controller

Requirements

- Production group / function group at standstill

Materials needed

- Soft cloth
- Optical cleaner
- Documentation of the control console manufacturer

WARNING	**Risk of injury!** **Risk of being trapped and crushed** by moving linear unit! => Clean measuring module only in cleaning position. => Observe the danger zone of the linear unit. => Do not reach with your hands behind the guard or at the side on the measuring module.

CAUTION	**Machine damage!** Material damage to **component** by aggressive cleaning agents! => Do not use any cleaning agents containing cellulose thinner and similar products for cleaning.

1. On the control console drive measuring module to cleaning position.

> The measuring module moves laterally to the stop.

> The linear unit is referenced.

2. Clean view window (1) (Fig. 28).

Note

The measuring module does not have to be driven back; it is automatically re-positioned when starting up the next production.

Fig. 28 Measuring module closed (left / 2)

D_188_016_01

(1) View window

4.26 Check / replenish aerosol cleaning agent tank

Requirements

- Pump is switched off

Materials needed

- Cleaning cloth
- Protective gloves
- Cleaning agents approved by WIFAG

ATTENTION	**Aggressive cleaning agent!** Damage to components due to corrosion! => Use only cleaning agents approved by WIFAG. => Mix the cleaning agent according to the instructions of the supplier. => Never use pure water for preliminary and after-washing.

=> Check fill-level and replenish cleaning agent and/or replace containers.

4.27 Check / replenish pump stand

4.27.1 Pump stand for bearer ring lubrication

Requirements

- Production group / function group at standstill
- Handle lubricants in accordance with the general guidelines (Chapt. 1.2 General safety information in Reg. 5 Lubrication).

Materials needed

- Soft cloth
- Oil No. 4 (capacity 1.8 l) (Chapt. 1.3 Lubricant properties; Chapt. 1.4 Lubricant overview in Reg. 5 Lubrication)

1. Replenish pump stand with oil No. 4 (Fig. 29).
2. Activate pump stand with pushbutton (1) and check whether oil is pumped out at all metering elements.

If no oil is pumped out at a metering element:

The metering element is damaged or the lubricating line is plugged up.

=> Check lubricating line and replace if necessary.

=> Check metering element and replace if necessary.

Fig. 29 Pump stand for bearer ring lubrication

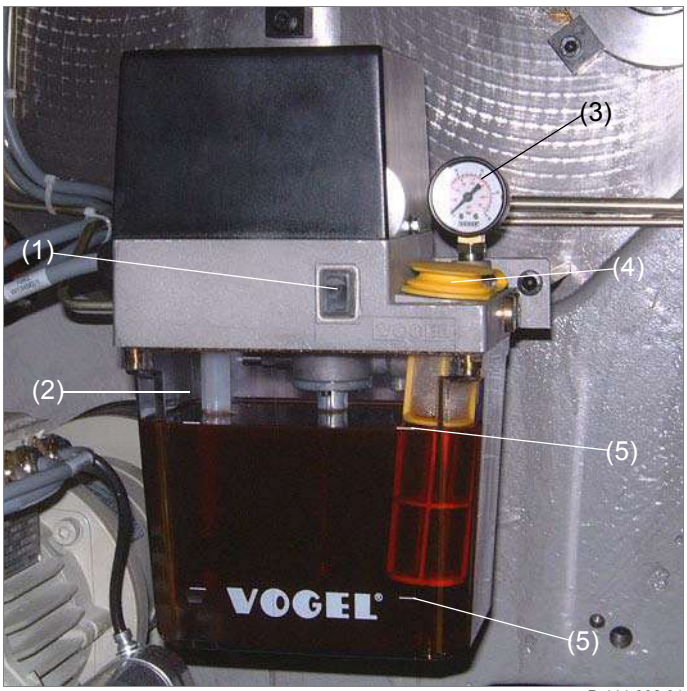

D 111,002 01

(1) Pushbutton
(2) Oil container
(3) Pressure gauge
(4) Filler inlet
(5) Level display

Fig. 30 Bearer ring lubrication sides I and II

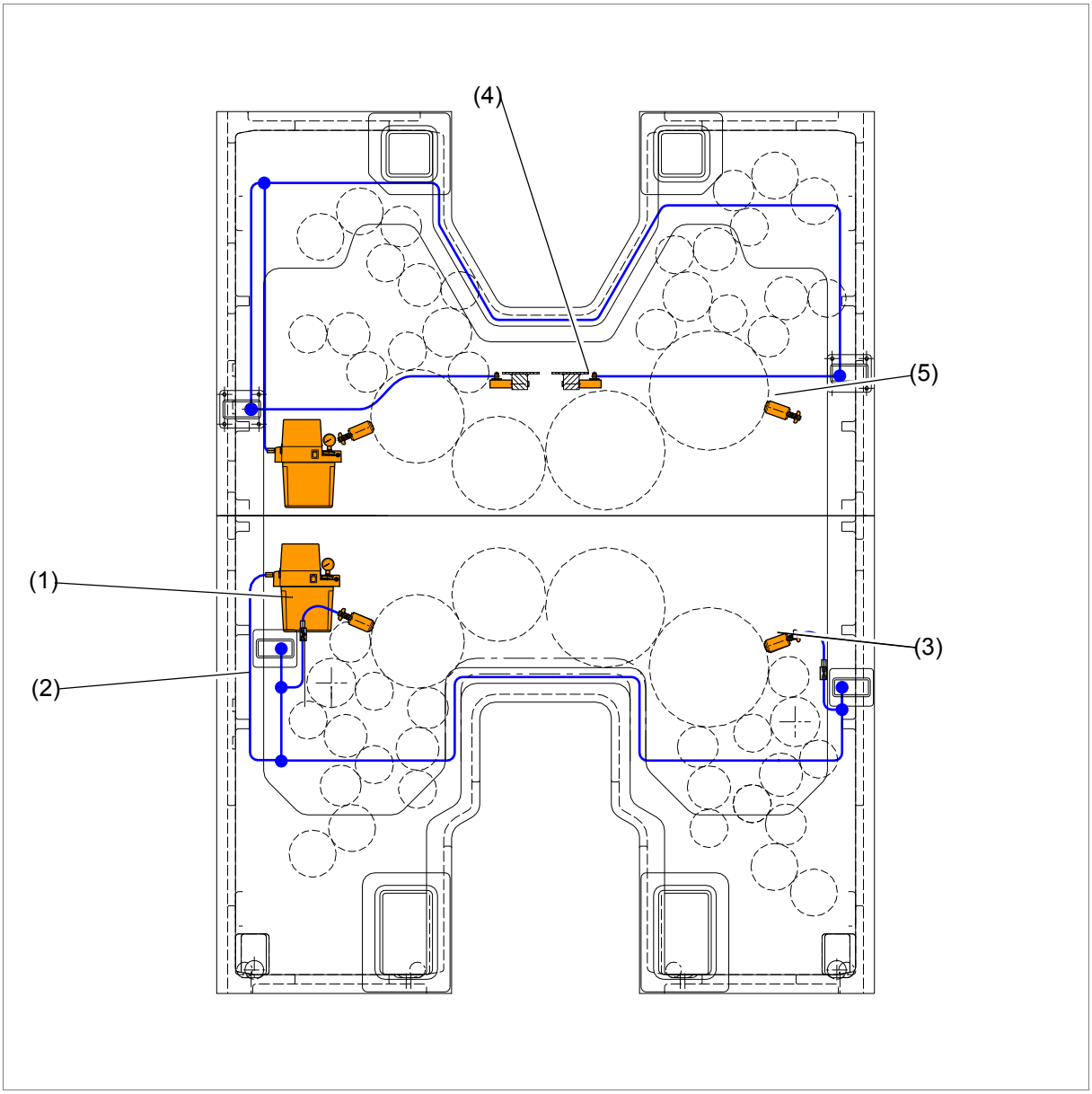

D37S_E002M

(1) Pump stand
(2) Feed line to metering elements
(3) Lubrication felt holder with metering element
(4) Metering element
(5) Lubrication felt holder

4.27.2 Pump stand for centralized grease-lubrication system

Requirements

- Production group / function group at standstill
- Handle lubricants in accordance with the general guidelines (Chapt. 1.2 General safety information in Reg. 5 Lubrication).

Materials needed

- Soft cloth
- Grease No. 3 (capacity 1 l or 1 kg) (Chapt. 1.3 Lubricant properties; Chapt. 1.4 Lubricant overview in Reg. 5 Lubrication)
- Mobile pneumatic grease gun

⚠ WARNING	**Risk of injury!** **Danger of tripping** over grease line to the mobile grease gun! => Roll up grease line after lubrication service and remove the grease gun from the function group.

=> Replenish pump stand with grease No. 3 (Fig. 31).

Fig. 31 Pump stand for centralized grease-lubrication system

D 111,003 01

(1) Grease container
(2) Grease nipple

4.28 Check oscillating drums

Requirements

- Production group / function group at standstill
- Oscillating drums are clean (Chapt. 4.2 Clean rubber rollers, oscillating drum, ink pickup roller)

Materials needed

- Reg. 3 Control elements

⚠ WARNING	**Risk of injury!** **Risk of being trapped and crushed** by rotating rollers and cylinders! => Turn operating mode switch to position *MAKEREADY*. => Turn printing couple only with the command *PLACE PLATES* or *LIFT OUT PLATES*. => Inch printing couple *FORWARD* or *BACK* only when nobody is in the danger zone.

1. From the control panel, *INCH FORWARD* or *INCH BACK* the printing couple.
2. Visually check the surface of all oscillating drums.

If oscillating drum surfaces are damaged or greatly worn:

=> Contact WIFAG.

3. Turn operating mode switch to position *OPERATION*.

4.29 Check bearer rings

Requirements

- Production group / function group at standstill
- Basic cleaning of printing couple performed (Chapt. 4.1 Clean blanket cylinder, Chapt. 4.2 Clean rubber rollers, oscillating drum, ink pickup roller; Chapt. 4.5 Clean and conserve plate cylinder)
- Handle lubricants in accordance with the general guidelines (Chapt. 1.2 General safety information in Reg. 5 Lubrication).

Materials needed

- Soft cloth
- Cleaning agents approved by WIFAG
- Resistant rubber gloves
- Protective mask
- Oil No. 4
- Reg. 3 Control elements

WARNING	
	Risk of injury! **Risk of being trapped and crushed** by rotating rollers and cylinders! => Turn operating mode switch to position *MAKEREADY*. => Turn printing couple only with the command *PLACE PLATES* or *LIFT OUT PLATES*. => Inch printing couple *FORWARD* or *BACK* only when nobody is in the danger zone.

CAUTION	
	Machine damage! Damage to the **system** due to corrosion! => Use only cleaning agents approved by WIFAG. => Mix the cleaning agent according to the instructions of the supplier. => Never use pure water for preliminary and after-washing.

1. From the control panel, *INCH FORWARD* or *INCH BACK* the printing couple.
2. Visually check the surfaces of all bearer rings.

If bearing ring surfaces are soiled:

=> Clean bearer ring surfaces and immediately afterward completely coat with oil No. 4.

If liquid runs over the bearer rings:

=> Look for leak and take required measures if possible.

=> Contact WIFAG.

If bearer ring surfaces are damaged or greatly worn:

=> Contact WIFAG.

3. Turn operating mode switch to position *OPERATION*.

4.30 Check rubber rollers

Requirements

- Production group / function group at standstill
- Rubber rollers are clean (Chapt. 4.2 Clean rubber rollers, oscillating drum, ink pickup roller)

Materials needed

- None

WARNING	
	Risk of injury! **Risk of being trapped and crushed** by rotating rollers and cylinders! => Turn operating mode switch to position *MAKEREADY*. => Turn printing couple only with the command *PLACE PLATES* or *LIFT OUT PLATES*. => Inch printing couple *FORWARD* or *BACK* only when nobody is in the danger zone.

1. From the control panel, *INCH FORWARD* or *INCH BACK* the printing couple.
2. Visually check the surfaces of all rubber rollers.

If rubber roller surfaces are glassy or greatly worn:

=> Replace rubber roller (Chapt. 3.2 Replace rubber roller (remove/install) in Reg. 15 Rubber rollers).

3. Turn operating mode switch to position *OPERATION*.

4.31 Checking the ink valves

Requirements

- Production group / function group at standstill
- Ink supply switched on (Ink level)

Materials needed

- Reg. 3 Control elements

=> Check ink valves visually.

If ink seeps out at the ink valve:

=> Replace valve cartridge (Chapt. 3.4 Replacing valve cartridge on the ink valve in Reg. 9 ink supply).

4.32 Maintenance activities on ink pumps / ink filter

Requirements

- Production group / function group at standstill
- Work on the electrical system may be performed only by specially trained **technicians**.
- Read Chapt. 8.9 Carrying out repairs in Reg. 2 Important for your safety in the *System* file.

Materials needed

- Manufacturer's documentation
- Warning sign *Work is in progress!*

WARNING	
	Risk of injury! **Damage to eyes** due to printing ink escaping at high pressure (up to 200 bar)! => Close stop cock between ink pump and feed line. => Switch off concerned ink pump and place warning sign *Work is in progress!* => Wear protective goggles and protective gloves. => Observe the safety datasheets of the printing ink manufacturer.

WARNING	
	Risk of injury! **Environmental pollution** due to improperly disposed of residual ink! => Comply with the local statutory regulations.

1. Carry out maintenance activities in accordance with the manufacturer's documentation.
2. Open stop cock between ink pump and feed line.
3. Switch on concerned ink pump.
4. Remove *Work is in progress!* warning sign.

4.33 Maintenance activities on spray dampening systems

Requirements

- Production group / function group at standstill
- Work on the electrical system may be performed only by specially trained **technicians**.
- Read Chapt. 8.9 Carrying out repairs in Reg. 2 Important for your safety in the *System* file.
- Read Chapt. 4.4 Working in the tunnel / mobile terminal in Reg. 2 Important for your safety.

Materials needed

- Documentation of the manufacturer in the *Suppliers' documentation* file
- Warning sign *Work is in progress!*

WARNING	**Risk of injury!** **Risk of being trapped and crushed** by rotating rollers and cylinders! => Turn operating mode switch to position *MAKEREADY*. => Turn printing couple only with the command *PLACE PLATES* or *LIFT OUT PLATES*. => Inch printing couple *FORWARD* or *BACK* only when nobody is in the danger zone. => Turn printing couple only when the corresponding spray dampening system is built in.

WARNING	**Risk of injury!** **Damage to eyes** due to dampening solution escaping at high pressure (4-6 bar)! => Close stop-cock between spray dampening system and feed line. => Switch off concerned spray dampening system on the terminal. => Wear protective goggles and protective gloves. => Observe the safety datasheets of the dampening solution manufacturer.

WARNING	
	Risk of injury! **Environmental pollution** due to improperly disposed of dampening solution! => Comply with the local statutory regulations.

1. On the terminal, change to the Menu Printer \ Offset sequences \ Manual mask.
2. Switch off concerned spray dampening system.
3. Carry out maintenance activities in accordance with the manufacturer's documentation.
4. Open stop-cock between spray dampening system and feed line.
5. Switch on concerned spray dampening system.
6. On the terminal, change to the Information mask.
7. Turn operating mode switch to position *OPERATION*.
8. Remove *Work is in progress!* warning sign.

4.34 Maintenance activities on dampening solution devices

Requirements

- Production group / function group at standstill
- Work on the electrical system may be performed only by specially trained **technicians**.
- Read Chapt. 8.9 Carrying out repairs in Reg. 2 Important for your safety in the *System* file.

Materials needed

- Documentation of the manufacturer in the *Suppliers' documentation* file
- Warning sign *Work is in progress!*

WARNING	**Risk of injury!** **Damage to eyes** due to dampening solution escaping at high pressure (4-6 bar)! => Close stop cock between dampening solution device and feed line. => Switch off dampening solution device and place *Work is in progress!* warning sign. => Wear protective goggles and protective gloves. => Observe the safety datasheets of the dampening solution manufacturer.

WARNING	**Risk of injury!** **Environmental pollution** due to improperly disposed of dampening solution! => Comply with the local statutory regulations.

1. Carry out maintenance activities in accordance with the manufacturer's documentation.
2. Open stop cock between dampening solution device and feed line.
3. Switch on concerned dampening solution device.
4. Remove *Work is in progress!* warning sign.

4.35 Maintenance activities on cylinder washing systems

Requirements

- Production group / function group at standstill
- Work on the electrical system may be performed only by specially trained **technicians**.
- Read Chapt. 8.9 Carrying out repairs in Reg. 2 Important for your safety in the *System* file.

Materials needed

- Manufacturer's documentation
- Warning sign *Work is in progress!*

WARNING	**Risk of injury!** **Risk of being trapped and crushed** by rotating rollers and cylinders! => Turn operating mode switch to position *MAKEREADY*. => Turn printing couple only with the command *PLACE PLATES* or *LIFT OUT PLATES*. => Inch printing couple *FORWARD* or *BACK* only when nobody is in the danger zone.

WARNING	**Risk of injury!** **Environmental pollution** due to improperly disposed of washing agent! => Comply with the local statutory regulations.

CAUTION	**Machine damage!** Damage to **cylinders** due to clamped connection cables and hoses! => Secure connection cable and hoses against clamping between cylinders and moving machine parts when removing cylinder washing units.

1. Carry out maintenance activities in accordance with the manufacturer's documentation.
2. Turn operating mode switch to position *OPERATION*.
3. Remove *Work is in progress!* warning sign.

4.36 Maintenance activities on pump stands

Requirements

- Production group / function group at standstill
- Work on the electrical system may be performed only by specially trained **technicians**.
- Read Chapt. 8.9 Carrying out repairs in Reg. 2 Important for your safety in the *System* file.

Materials needed

- Documentation of the manufacturer in the *Suppliers' documentation* file
- Warning signs *Work is in progress!*

DANGER	**Danger!** **Operation** of the function group by others! => De-allocate function group from the production group at the terminal and electrically disable (push the *SAFE-STOP* pushbutton). => Place Work in progress! warning signs on the corresponding terminals and control panels. => Before entering each command at a terminal or control panel, make certain that nobody is in the danger zone.

1. Carry out maintenance activities in accordance with the manufacturer's documentation.
2. Electrically enable function group with the *SAFE-STOP* pushbutton.
3. Remove *Work is in progress!* warning sign.

7 Electrical and control systems

1 Overview **7.3**

2 Construction and function **7.4**

2.1 Power supply **7.5**

2.1.1 Regular voltage supply 7.6

2.1.2 UPS power supply 7.7

2.2 Bus systems **7.8**

2.2.1 Ethernet 7.8

2.2.2 CANOpen bus 7.9

2.3 Special electrical components **7.10**

2.3.1 Control system for spray dampening system 7.11

3 Replace components **7.12**

4 Basic settings **7.13**

5 Commissioning **7.14**

1 Overview

Fig. 1 Overview of switchgear cabinets, drives; view from above

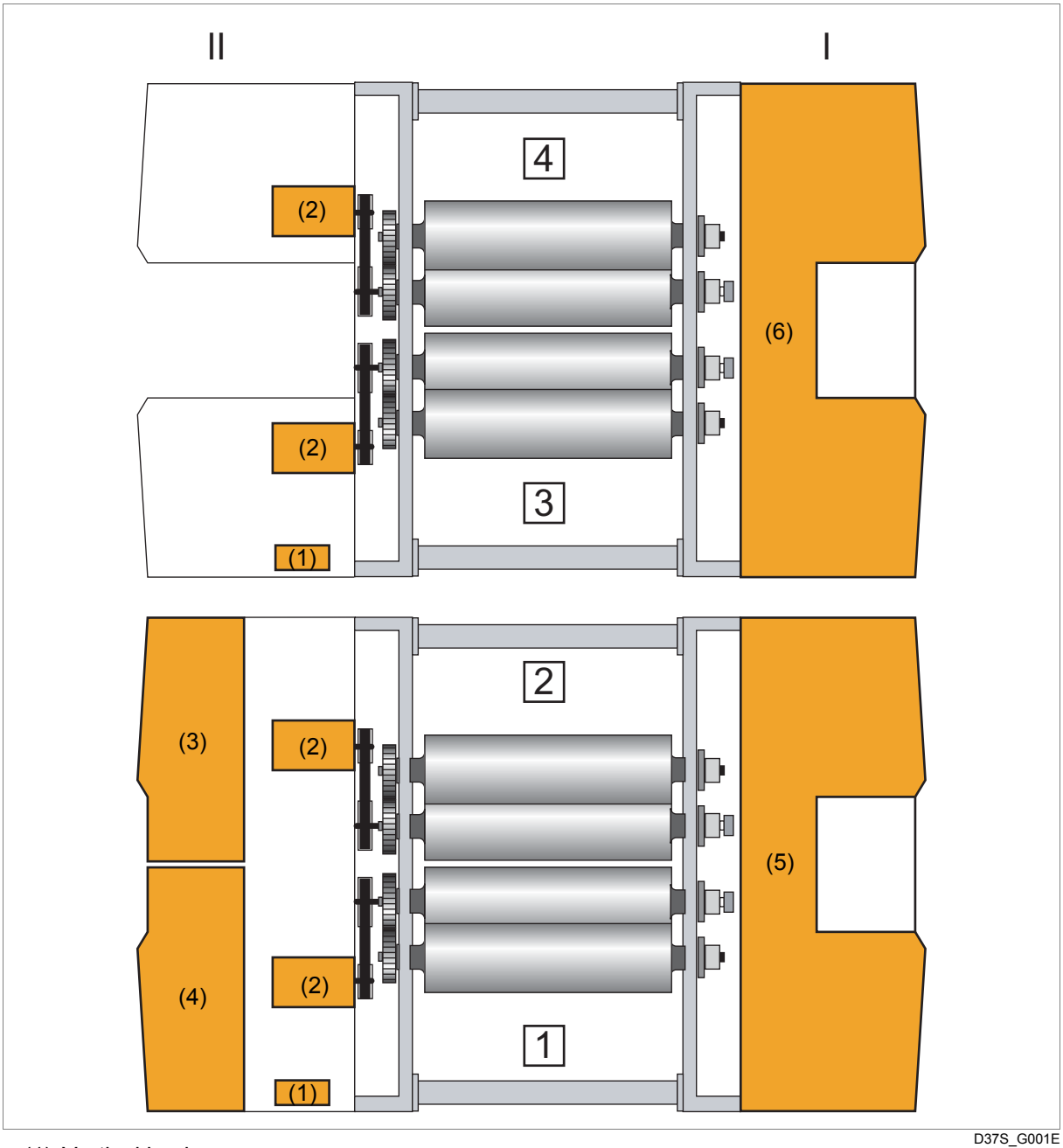

D37S_G001E

(1) Vertical busbar
(2) Printing couple drives
(3) Bridge box, lower bridge (+BK BU)
(4) Bridge box, upper bridge (+BK BO)
(5) Printing couple box, lower bridge (+DK BU)
(6) Printing couple box, upper bridge (+DK BO)

2 Construction and function

Contents

This chapter contains the following information:

- Chapt. 2.1 Power supply
- Chapt. 2.2 Bus systems
- Chapt. 2.3 Special electrical components

2.1 Power supply

DANGER	**Danger!** Risk of a lethal electric **surge**! => Work on electrical switching plants may be carried out only by personnel with the relevant training. => Observe instructions in Chapt. 5.1 Switching the power supply on and off in Reg. 2 Important for your safety. => Before touching electrical components, ensure that the power to the function group is switched off and check with a voltmeter.

The individual function groups are provided with power as follows:

- Primary supply via busbar (public power supply).
- Primary supply from the uninterruptible power supply (UPS) is tapped from the section box of the machine.

Fig. 2 Primary supply of a printing tower, view side I

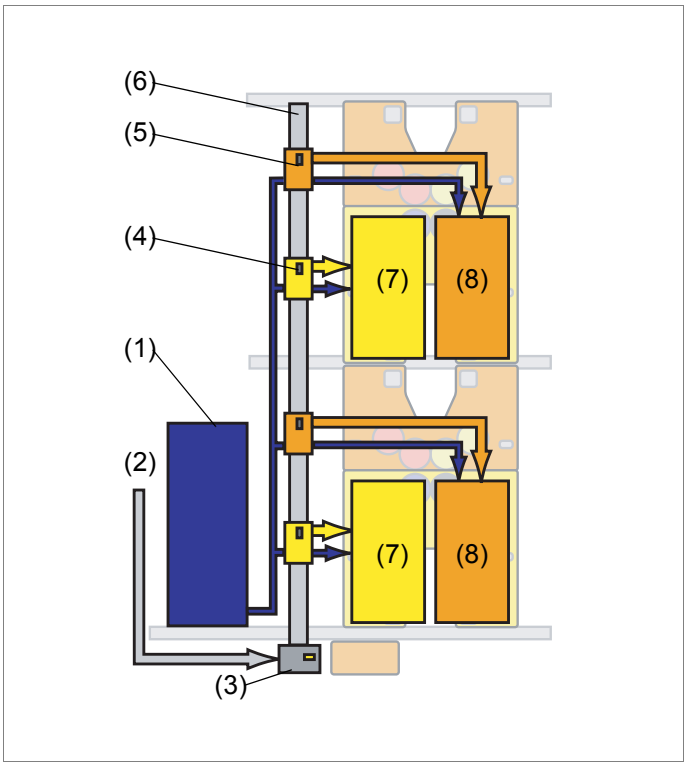

D37e_G003E_01

(1) Section box with UPS distribution
(2) Main supply
(3) Junction box, tower
(4) Junction box, lower bridge
(5) Junction box, upper bridge
(6) Vertical busbar
(7) Bridge box (BK), lower bridge
(8) Bridge box (BK), upper bridge

2.1.1 Regular voltage supply

- The regular voltage supply for the printing tower is taken from a junction box (1) (Fig. 3) on the horizontal busbar.
- For each bridge one junction box (1) (Fig. 4) is integrated on the vertical busbar with load isolator (125 A).

Fig. 3 Junction box, horizontal busbar

D 110,009 01

(1) Junction boxes
(2) Horizontal busbar, view from below

Fig. 4 Feeder box, vertical busbar

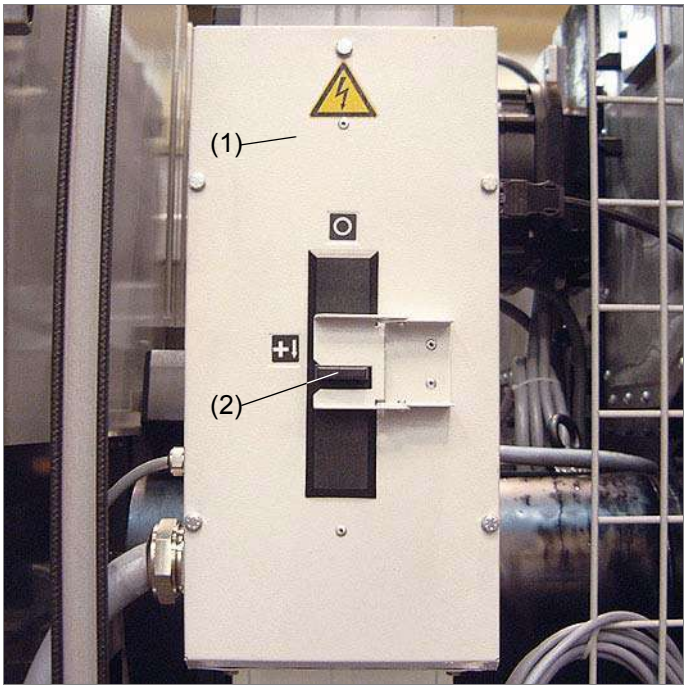

D_131_013_01

(1) Junction boxes
(2) Safety switch (Chapt. 5 Safety switch of the power supply in Reg. 2 Important for your safety)

2.1.2 UPS power supply

To ensure a regulated rundown in the event of a voltage drop and that operation is reestablished quickly, individual components are supplied by a separate voltage supply (UPS).

- Power to the various functiongroups is distributed from the section box (SK).
- Each tower can be switched off from the UPS in the section box.
- Each tower is secured in the section box with 16 A.
- The supply runs via the junction box on the vertical busbar (1) (Fig. 4).
- Each bridge can be switched off from the UPS in the junction box.

Note

Further information about the uninterruptible power supply is found in the following documents:

- WIFAG electrical circuit diagram (B)
- Chapt. 5.1 Switching the power supply on and off in Reg. 2 Important for your safety
- Chapt. 2.1.4 UPS power supply in Reg. 7 Electrical and control systems in the *System* file

2.2 Bus systems

Note

For information see Chapt. 2.2 Bus systems in Reg. 7 Electrical and control systems in the *System* file.

2.2.1 Ethernet

Function

- Ethernet connection: Terminals Y local control systems (SYMAC) Y service PC
  – Transfer speed 10/100 Mbit/s (RJ45)
- SERCOS III Connection: section control (SYMAC) ♣♣♣ local control systems (SYMAC)
  – Transfer speed 10/100/1000 Mbit/s (RJ45)

Configuration

- Ethernet cable
- See the equipment-specific documents by WIFAG

Fig. 5 Autopaster Ethernet

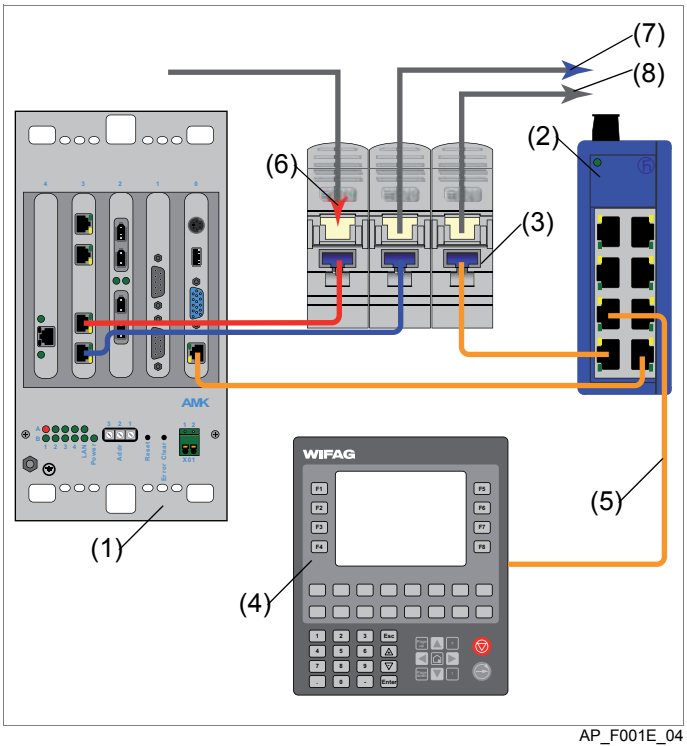

AP_F001E_04

(1) SYMAC control
(2) Ethernet switch
(3) Connection
(4) Terminal
(5) Ethernet
(6) Ethernet SERCOS III IN
(7) Ethernet SERCOS III OUT
(8) Supervisory level Ethernet

2.2.2 CANOpen bus

Function

- Connection: SYMAC control system ⇔ drive controller ⇔ WAGO I/O ⇔ valve bank ⇔ WiSiBox ⇔ valve bank
- Connection: SYMAC control system ⇔ control system for spray dampening system

Configuration

- Connections: Firewire cable (3*2*0.25 mm^2)
- Terminating resistance 120 Ohm

Fig. 6 Example of CANOpen bus, upper bridge

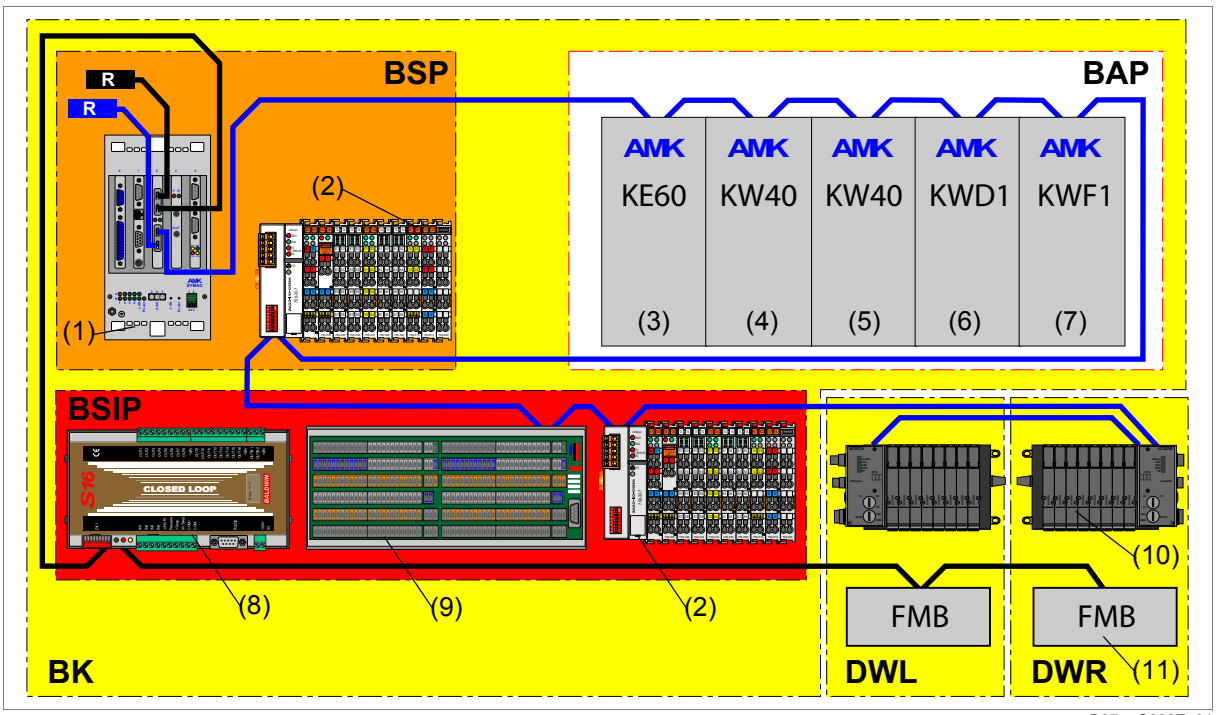

D37e_G002E_01

(1) SYMAC control
(2) WAGO I/O
(3) AMK KE60 > supply unit for drive controllers
(4) AMK KW40 > driver controller for printing couple drive, left
(5) AMK KW40 > driver controller for printing couple drive, right
(6) AMK KWD > drive controller for ink fountain rollers
(7) AMK KWF -> regulation of feed-in device (optional)
(8) Jimek control device > control system for spray dampening systems
(9) WiSiBox
(10) Bosch Rexroth valve bank
(11) Ink knife bar

2.3 Special electrical components

Note

Information on the electrical components outside the switchgear cabinet and their functions can be found in the index of the corresponding sub-function groups.

Note

Information on electrical components used in several function groups can be found in Chapt. 2.5 Electrical components in general in Reg. 7 Electrical and control systems in the *System* file.

2.3.1 Control system for spray dampening system

Function

- Activation of two spray dampening systems (16 nozzles)

Configuration

- WIFAG article number 1365876
- Activation via CANOpen bus
- For further information see the *supplier's documentation*

Fig. 7 Control system for spray dampening system

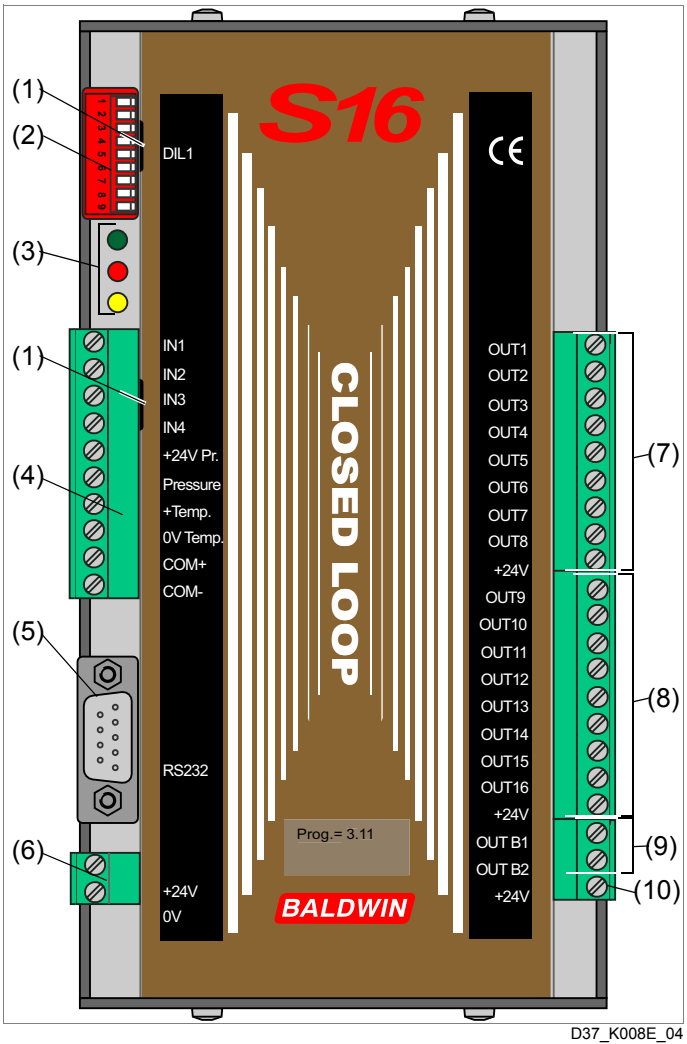

D37_K008E_04

(1) CANOpen bus connection
(2) DIL switch
(3) LEDs:
green: control device in operation
red: Error
yellow: communication Rx/Tx
(4) Connections for binary inputs, output voltage, temperature sensors and RS485
(5) Service interface RS 232
(6) 24 VDC connections
(7) Nozzle beam connections dampening unit left
(8) Nozzle beam connections dampening unit right
(9) 24V binary auxiliary outputs
(10) 24 VDC output voltage

Note

Information on replacing can be found in Chapt. 2.1 Replacing electrical devices in general in Reg. 11 Electrical setting and commissioning instructions in the *System* file.

3 Replace components

Specification

For safety reasons only the replacement work described in these operating instructions may be performed! All replacement work not described herein must be performed by qualified WIFAG personnel.

Requirements

- Work on the electrical system may be performed only by specially trained **technicians**.
- Read Chapt. 8.9 Carrying out repairs in Reg. 2 Important for your safety in the *System* file.

DANGER	**Danger!** Risk of a lethal electric **surge**! => Work on electrical switching plants may be carried out only by personnel with the relevant training. => Observe instructions in Chapt. 5.1 Switching the power supply on and off in Reg. 2 Important for your safety. => Before touching electrical components, ensure that the power to the function group is switched off and check with a voltmeter.

Replacing electrical devices

- See Chapt. 2.1 Replacing electrical devices in general in Reg. 11 Electrical setting and commissioning instructions in the *System* file.

Replace drives

- See Chapt. 2.2 Replacing drives in Reg. 11 Electrical setting and commissioning instructions in the *System* file.

Replace resolver

- See Chapt. 2.3 Replace resolver in Reg. 11 Electrical setting and commissioning instructions in the *System* file.

4 Basic settings

Specification

For safety reasons only the adjustment work described in these operating instructions may be performed! All adjustment work not described herein must be performed by qualified WIFAG personnel.

Requirements

- Work on the electrical system may be performed only by specially trained **technicians**.
- Read Chapt. 8.9 Carrying out repairs in Reg. 2 Important for your safety in the *System* file.

DANGER	**Danger!** Risk of a lethal electric **surge**! => Work on electrical switching plants may be carried out only by personnel with the relevant training. => Observe instructions in Chapt. 5.1 Switching the power supply on and off in Reg. 2 Important for your safety. => Before touching electrical components, ensure that the power to the function group is switched off and check with a voltmeter.

Setting proximity sensors and reflected light sensors

- See Chapt. 4.1 Setting proximity sensors and reflected light sensors in Reg. 11 Electrical setting and commissioning instructions in the *System* file.

5 Commissioning

Specification

For safety reasons only the commissioning work described in these operating instructions may be performed! All commissioning work not described herein must be performed by qualified WIFAG personnel.

Requirements

- Work on the electrical system may be performed only by specially trained **technicians**.
- Read Chapt. 8.9 Carrying out repairs in Reg. 2 Important for your safety in the *System* file.

DANGER	**Danger!** Risk of a lethal electric **surge**! => Work on electrical switching plants may be carried out only by personnel with the relevant training. => Observe instructions in Chapt. 5.1 Switching the power supply on and off in Reg. 2 Important for your safety. => Before touching electrical components, ensure that the power to the function group is switched off and check with a voltmeter.

Commissioning the AMK controller

- See Chapt. 3.3 AMK drive controller in Reg. 11 Electrical setting and commissioning instructions in the *System* file.

Commissioning the SYMAC

- See Chapt. 3.1 AMKAMAC control device in Reg. 11 Electrical setting and commissioning instructions in the *System* file.

Commissioning the WiSiBox

- See Chapt. 3.4 WiSiBox in Reg. 11 Electrical setting and commissioning instructions in the *System* file.

Commissioning the terminal

- See Chapt. 3.5.4 Load terminal in Reg. 11 Electrical setting and commissioning instructions in the *System* file.

8 Pneumatic system

1 Overview **8.3**
1.1 System **8.3**
1.2 printing unit **8.4**
1.3 Pneumatic system schematics **8.5**

2 Design and function **8.7**
2.1 Main air pressure-regulator **8.7**
2.2 Pressure switch **8.7**
2.3 Filter-regulator-lubricator unit **8.7**
2.4 Pneumatic components on subfunction groups **8.8**
2.5 Valve bank **8.9**

3 Replace components **8.10**
3.1 WIFAG article numbers **8.10**
3.2 Replace standard components **8.11**
3.3 Replace special components **8.11**

4 Basic settings **8.12**
4.1 Setting **8.12**
4.1.1 Set the compressor 8.12
4.1.2 Set the main air pressure-regulator 8.12
4.1.3 Setting the filter-regulator-lubricator unit 8.12
4.1.4 Set magnetic field sensors 8.13
4.1.5 Set one-way restrictor valve 8.13
4.1.6 Setting pressure-regulating valves 8.13
4.2 Calibration **8.13**
4.3 Testing **8.13**

1 Overview

Contents

This chapter contains the following information:

- Chapt. 1.1 System
- Chapt. 1.2 printing unit
- Chapt. 1.3 Pneumatic system schematics
- Chapt. 2 Design and function

1.1 System

Note

For further information about the overall pneumatic system see Chapt. 1 Overview in Reg. 8 Pneumatic system in the *System* file.

1.2 printing unit

Fig. 1 Overview of pneumatic system, view from side I

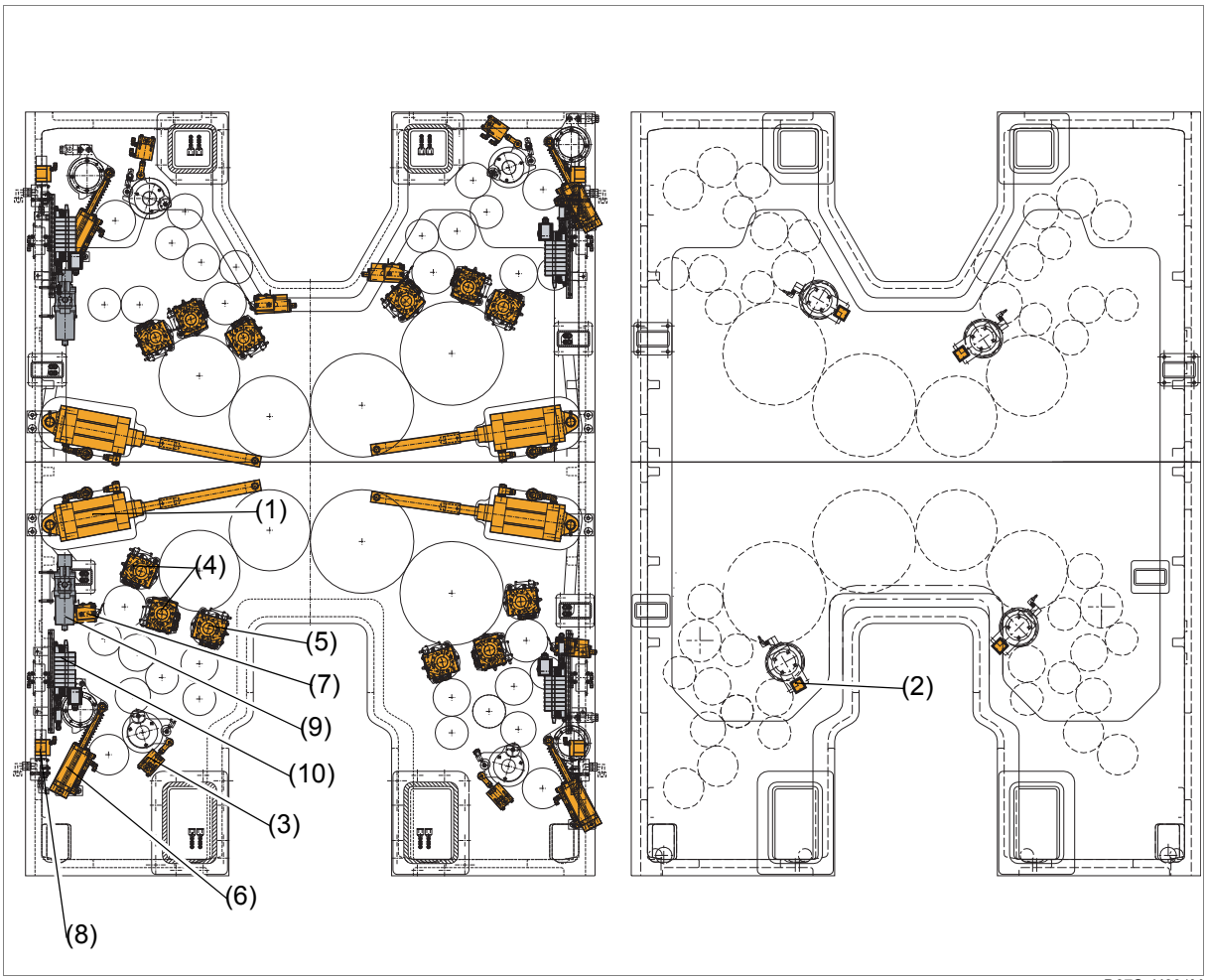

D37S_H001M

(1) Pneumatic cylinder for impression throw-on (Reg. 17 Blanket cylinder)
(2) Pneumatic cylinder for inking unit clutch (Reg. 14 Oscillating drum and reciprocator drive)
(3) Pneumatic cylinder for ink pickup roller (Reg. 10 Ink fountain roller and ink pickup roller)
(4) Pneumatic cylinder for ink form roller (Reg. 15 Rubber rollers)
(5) Pneumatic cylinder for dampening form roller (Reg. 15 Rubber rollers)
(6) Pneumatic cylinder for ink knife bar (Reg. 11 Ink knife bar)
(7) Pneumatic cylinder for roller washing device (Reg. 18 Washing units)
(8) Ink valves (Reg. 9 ink supply)
(9) Filter-regulator-lubricator unit (Reg. 8 Pneumatic system in the *System* file)
(10) Valve bank (Chapt. 2.5 Valve bank)

1.3 Pneumatic system schematics

Note

You will find the following pneumatic system schematics at the end of this index:

Tab. 1 Pneumatic system schematics

System part	Pneumatic system schematic
Printing tower D01, D09	
Bridge under 0X01 left (2 ink valves)	1331275A.pdf
Bridge under 0X01 right (2 ink valves / web severer / carrier roller brake)	1359671A.pdf
Bridge above 0X01 left (4 ink valves / anti-reversing device)	1,425,535A.pdf
Bridge above 0X02 right (4 ink valves)	1,425,534A.pdf
Bridge under 0X03 left (2 ink valves)	1331275A.pdf
Bridge under 0X03 right (2 ink valves / web severer / carrier roller brake)	1,359,671A.pdf
Bridge under 0X04 left (2 ink valves)	1,331,277A.pdf
Bridge under 0X04 right (2 ink valves / web severer / carrier roller brake)	1,352,581A.pdf
Printing tower D02, D10	
Bridge under 0X01 left (2 ink valves)	1331275A.pdf
Bridge under 0X01 right (2 ink valves / web severer / carrier roller brake)	1359671A.pdf
Bridge above 0X02 left (4 ink valves / anti-reversing device / carrier roller brake)	1,425,535A.pdf
Bridge above 0X02 right (4 ink valves)	1,425,534A.pdf
Bridge under 0X03 left (2 ink valves)	1331275A.pdf
Bridge under 0X03 right (2 ink valves / web severer / carrier roller brake)	1,359,671A.pdf
Bridge under 0X04 left (2 ink valves / web severer / carrier roller brake)	1,352,581A.pdf
Bridge under 0X04 right (2 ink valves)	1,331,277A.pdf
Printing tower D03, D05, D07, D11	
Bridge under 0X01 left (2 ink valves)	1331275A.pdf
Bridge under 0X01 right (2 ink valves / web severer / carrier roller brake)	1359671A.pdf
Bridge above 0X02 left (2 ink valves)	1,331,277A.pdf
Bridge above 0X02 right (2 ink valves)	1,331,277A.pdf
Bridge under 0X03 left (2 ink valves)	1331275A.pdf
Bridge under 0X03 right (2 ink valves)	1331275A.pdf
Bridge under 0X04 left (2 ink valves)	1,331,277A.pdf
Bridge under 0X04 right (2 ink valves / web severer / carrier roller brake)	1,352,581A.pdf

Tab. 1 (Cont. Tab.) Pneumatic system schematics

System part	Pneumatic system schematic
Printing tower D04, D06, D08, D12	
Bridge under 0X01 left (2 ink valves)	1331275A.pdf
Bridge under 0X01 right (2 ink valves / web severer / carrier roller brake)	1359671A.pdf
Bridge above 0X02 left (2 ink valves)	1,331,277A.pdf
Bridge above 0X02 right (2 ink valves)	1,331,277A.pdf
Bridge under 0X03 left (2 ink valves)	1331275A.pdf
Bridge under 0X03 right (2 ink valves)	1331275A.pdf
Bridge above 0404 left (2 ink valves / web severer / carrier roller brake)	1,352,581A.pdf
Bridge above 0404 right (2 ink valves)	1,331,277A.pdf
Power supply overview and actuation of machine 1 • Anti-reversing devices, anti-reversing devices, carrier rollers brakes	1438897B.pdf
Power supply overview and actuation of machine 2 • Anti-reversing devices, anti-reversing devices, carrier rollers brakes	1,438,898B.pdf
Power supply overview and actuation of machine 3 • Anti-reversing devices, anti-reversing devices, carrier rollers brakes	1,438,899B.pdf

2 Design and function

Contents

This chapter contains the following information:

- Chapt. 2.1 Main air pressure-regulator
- Chapt. 2.2 Pressure switch
- Chapt. 2.3 Filter-regulator-lubricator unit
- Chapt. 2.4 Pneumatic components on subfunction groups
- Chapt. 2.5 Valve bank

2.1 Main air pressure-regulator

Note

For further information about the overall pneumatic system see Chapt. 2.1 Main air pressure-regulator in Reg. 8 Pneumatic system in the *System* file.

2.2 Pressure switch

Note

For further information about the overall pneumatic system see Chapt. 2.2 Pressure switch in Reg. 8 Pneumatic system in the *System* file.

2.3 Filter-regulator-lubricator unit

Note

For further information about the overall pneumatic system see Chapt. 2.3 Filter-regulator-lubricator unit in Reg. 8 Pneumatic system in the *System* file.

2.4 Pneumatic components on subfunction groups

Note

Information about the design and function of the various pneumatic components on the printing unit can be found in the following documents:

- Reg. 9 ink supply
  – Chapt. 2.2 Ink level control and ink valve block

- Reg. 10 Ink fountain roller and ink pickup roller
  – Chapt. 2.3 Ink pickup roller

- Reg. 11 Ink knife bar
  – Chapt. 2.1 Ink knife bar throwon

- Reg. 14 Oscillating drum and reciprocator drive
  – Chapt. 2.4 Inking unit clutch

- Reg. 15 Rubber rollers
  – Chapt. 2.7 Pneumatic roller bearing

- Reg. 17 Blanket cylinder
  – Chapt. 2.4 printing throwon

- Reg. 18 Washing units
  – Chapt. 2.2 Roller washing device
  – Chapt. 2.3 Spray device cleaning agent (optional)

- Reg. 19 Web monitoring
  – Reg. 2.2 Web severer
  – Reg. 2.3 Anti-reversing device
  – Reg. 2.4 Carrier roller brake

2.5 Valve bank

In every printing couple on side I a valve bank is installed for switching the pneumatic actuators (Fig. 2), (Fig. 3).

The valve bank is supplied with current via the bus module (5). The valves (3) are electrically actuated and pneumatically switched by means of the bus module (5). The valves can also be manually actuated with the auxiliary manual control (1).

Specification

The rotary switch for the auxiliary manual control must **not** be depressed!

Note

Information about the valve configuration can be found in the pneumatic system schematic.

Note

Further information about the valve bank can be found in Chapt. 2.4.5 Bosch Rexroth valve bank in Reg. 7 Electrical and control systems in the *System* file and in the *supplier's documentation* file provided in the manufacturer's documentation.

Fig. 2 Side view of valve bank

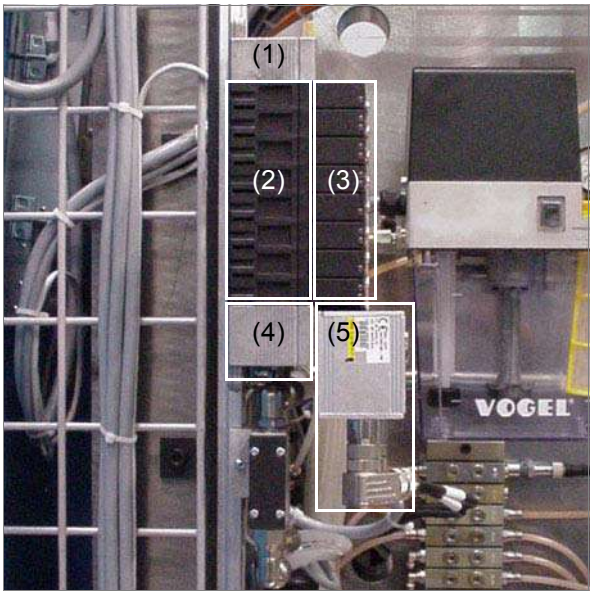

D_129_006_01

(1) End plate
(2) Connection plates
(3) Valves
(4) End plate with pneumatic coupling
(5) Bus module (CANopen bus)

Fig. 3 Front view of valve bank

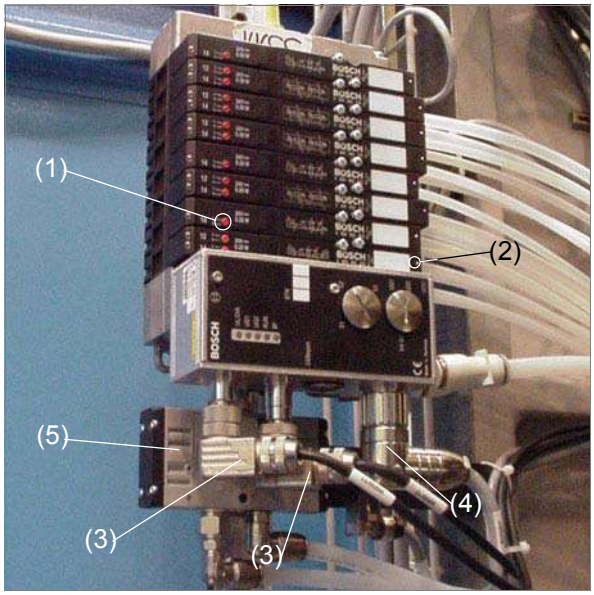

D_129_005_01

(1) Rotary switch for auxiliary manual control
(2) Status LED (yellow)
(3) CANopen bus connector
(4) 24 DC primary supply plug
(5) Valve for impression throwon

3 Replace components

Contents

This chapter contains the following information:

- Chapt. 3.1 WIFAG article numbers
- Chapt. 3.2 Replace standard components
- Chapt. 3.3 Replace special components

Specification

For safety reasons only the replacement work described in these operating instructions may be performed! All replacement work not described herein must be performed by qualified WIFAG personnel.

3.1 WIFAG article numbers

Note

The WIFAG article numbers for parts of the valve bank and cross-system pneumatic system can be found in Chapt. 3.1 WIFAG article numbers in Reg. 8 Pneumatic system in the System *file*.

Tab. 2 Overview of components and accessories

Article	Obtainable only from WIFAG	Can be ordered from WIFAG
Pneumatic components, lower bridge	1425465	----------
Pneumatic components, upper bridge	1425466	----------
valve bank	1425531 1425532 1425533	----------
Valve for impression thrown (single valve)	----------	109537

3.2 Replace standard components

Note

For further information about replacement work see Chapt. 3 Replace components in Reg. 8 Pneumatic system in the *System* file.

3.3 Replace special components

Note

No special components are fitted to the printing unit.

4 Basic settings

Contents

This chapter contains the following information:

- Chapt. 4.1 Setting
- Chapt. 4.2 Calibration
- Chapt. 4.3 Testing

Specification

For safety reasons only the adjustment work described in these operating instructions may be performed! All adjustment work not described herein must be performed by qualified WIFAG personnel.

4.1 Setting

4.1.1 Set the compressor

Note

For further information about setting work see Chapt. 4.1.1 Setting the compressor in Reg. 8 Pneumatic system in the *System* file.

4.1.2 Set the main air pressure-regulator

Note

For further information about setting work see Chapt. 4.1.2 Set the main air pressure-regulator in Reg. 8 Pneumatic system in the *System* file.

4.1.3 Setting the filter-regulator-lubricator unit

Note

For further information about setting work see Chapt. 4.1.3 Setting the filter-regulator-lubricator unit in Reg. 8 Pneumatic system in the *System* file.

4.1.4 Set magnetic field sensors

Note

More information on this adjustment work can be found in the following chapters:

- Chapt. 4.1.3 Setting the magnetic field sensor in Reg. 11 Ink knife bar

4.1.5 Set one-way restrictor valve

Note

More information on this adjustment work can be found in the following chapters:

- Chapt. 4.1.1 Setting the roller washing device in Reg. 18 Washing units

4.1.6 Setting pressure-regulating valves

Note

More information on this adjustment work can be found in the following chapters:

- Chapt. 4.1.1 Setting the roller washing device in Reg. 18 Washing units
- Chapt. 4.1.2 Setting anti-reversing device in Reg. 19 Web monitoring

4.2 Calibration

Note

No calibrations are necessary on this sub-function group.

4.3 Testing

Note

No tests are necessary on this sub-function group.

9 ink supply

1 Overview ... 9.3
1.1 Subassemblies ... 9.3
1.2 Customer-specific color imposition ... 9.4

2 Construction and function ... 9.5
2.1 Main supply system ... 9.6
2.2 Ink level control and ink valve block ... 9.7
2.3 Portable ink fountain ... 9.9

3 Replace components ... 9.10
3.1 WIFAG article numbers ... 9.10
3.2 Replacing the ink level sensor ... 9.11
3.3 Replacing components of the ink level control ... 9.13
3.4 Replacing valve cartridge on the ink valve ... 9.16
3.5 Replace components of the ink pump ... 9.18

4 Basic settings ... 9.19
4.1 Setting ... 9.19
4.2 Calibration ... 9.19
4.3 Testing ... 9.20
4.3.1 Testing the ink level sensor ... 9.20
4.3.2 Testing the ink level control ... 9.21

1 Overview

Contents

This chapter contains the following information:

- Chapt. 1.1 Subassemblies
- Chapt. 1.2 Customer-specific color imposition

1.1 Subassemblies

Fig. 1 Overview of ink supply, view from side I

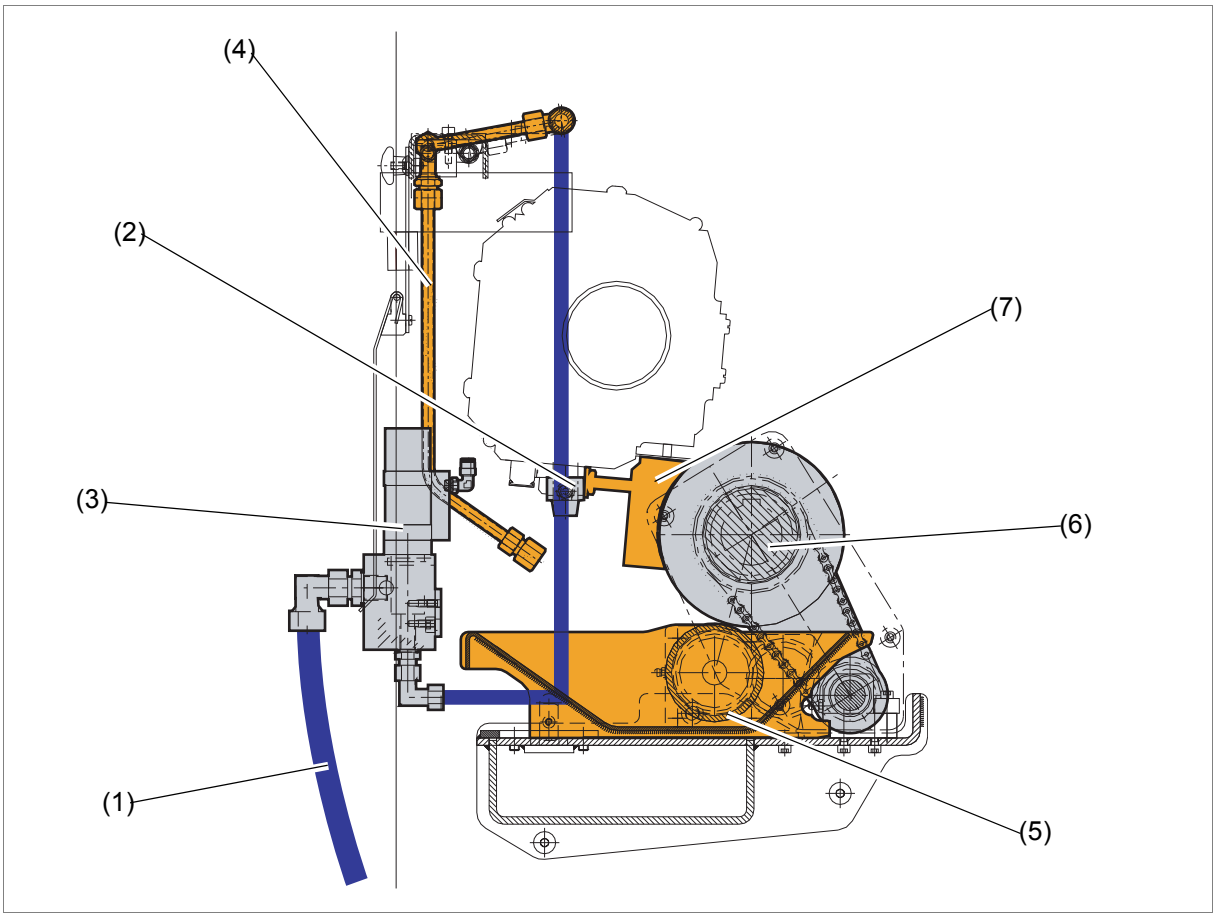

D37e_I001M_01

(1) Main supply system (Chapt. 2.1 Main supply system)
(2) Ink level sensor (Chapt. 2.2 Ink level control and ink valve block)
(3) Ink valve bank (Chapt. 2.2 Ink level control and ink valve block)
(4) Portable ink fountain feed line (Chapt. 2.2 Ink level control and ink valve block)
(5) Portable ink fountain (Chapt. 2.3 Portable ink fountain)
(6) Drive for portable ink fountain (Chapt. 2.3 Portable ink fountain)
(7) Ink separator (Chapt. 2.4 Ink separator in Reg. 11 Ink knife bar)

1.2 Customer-specific color imposition

Note

You will find the following ink supply schematic at the end of this index:

- 1,416,731A.pdf

2 Construction and function

Contents

This chapter contains the following information:

- Chapt. 2.1 Main supply system
- Chapt. 2.2 Ink level control and ink valve block
- Chapt. 2.3 Portable ink fountain

2.1 Main supply system

The ink is pressed with an ink pump from the ink container (1) into the main supply system (2) and fed to the ink valves (3) through feeders (Fig. 2).

Note

The ink pumps are not included in the WIFAG product scope and are not dealt with in this document.
Information about ink pumps can be found in the manufacturer's documentation.

Fig. 2 Example of ink supply (not customer specific)

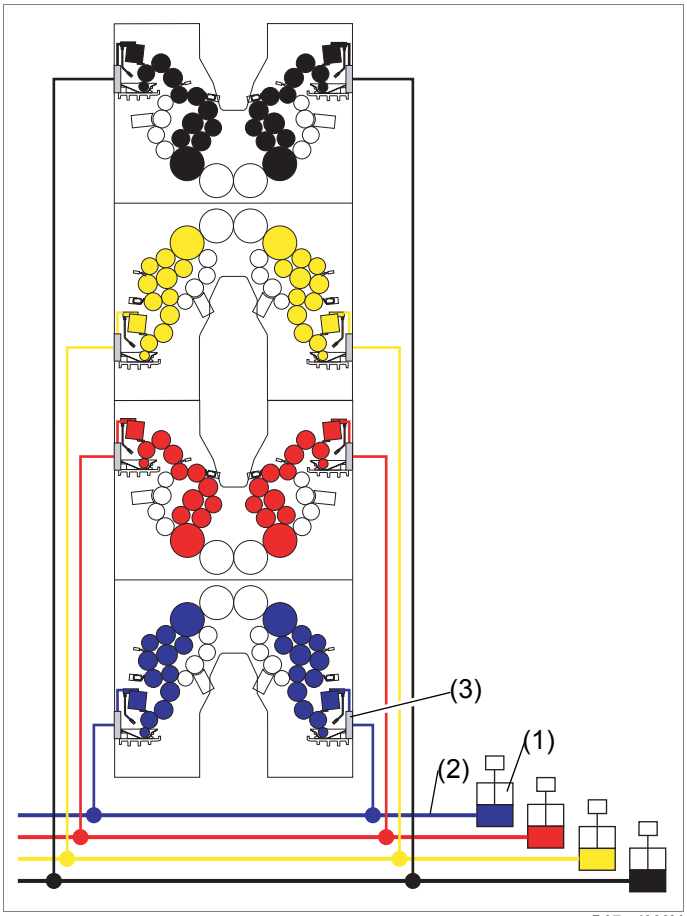

D37e_I003M

(1) Ink container
(2) Main supply line
(3) Ink valve

2.2 Ink level control and ink valve block

The ink level sensor (1) above each portable ink fountain detects the ink level and passes on the value to the machine control system (Fig. 3). The ink valves (1) are opened and closed by pneumatic regulating valves (Fig. 4).

Note

The regulating values of the ink valves are located on the valve bank.
Information about the control valves is found in the following chapters:

- Chapt. 1.3 Pneumatic system schematics in Reg. 8 Pneumatic system
- Chapt. 2.5 Valve bank in Reg. 8 Pneumatic system
- Chapt. 2.4.5 Bosch Rexroth valve bank in Reg. 7 Electrical and control systems in the *System* file

Fig. 3 Ink level sensor

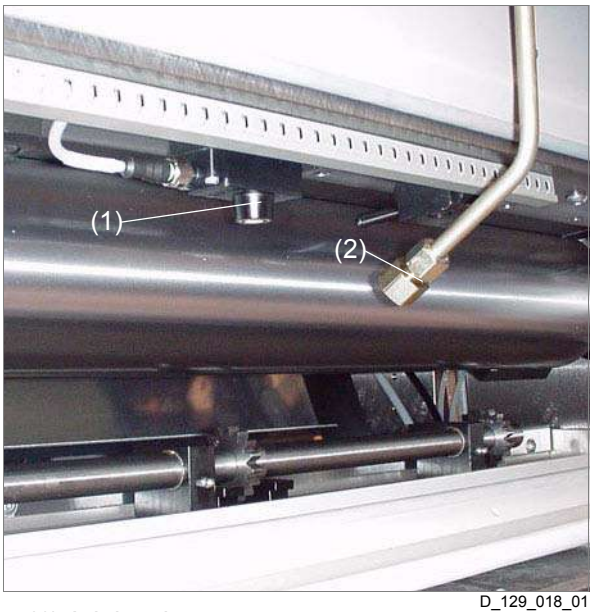

D_129_018_01

(1) Ink level sensor
(2) Portable ink fountain feed line

Fig. 4 Ink valve bank

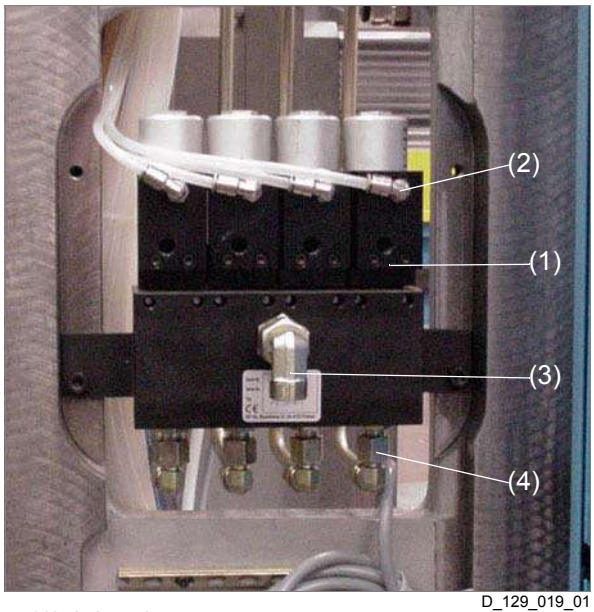

D_129_019_01

(1) Ink valve
(2) Control cable (control valve on valve bank)
(3) Main line (inlet)
(4) Portable ink fountain feed line (outlet)

The ink level control is integrated in the ink knife bar (Fig. 5).

The ink level sensors are connected to the ink knife bar connection print (3) and to electronic ink key controller device (1) by flat ribbon cables. The ink knife bar connection print (3) is installed in the ink knife bar right (side I).

The power is supplied (Ethernet and power supply) by the electronic ink key controller device (1).

Note

Further information on the wiring and addressing can be found in Chapt. 2.3 Ink key control in Reg. 11 Ink knife bar.
Further information about the connection is in Chapt. 2.2.1 Ethernet in Reg. 7 Electrical and control systems.

Fig. 5 Ink level control

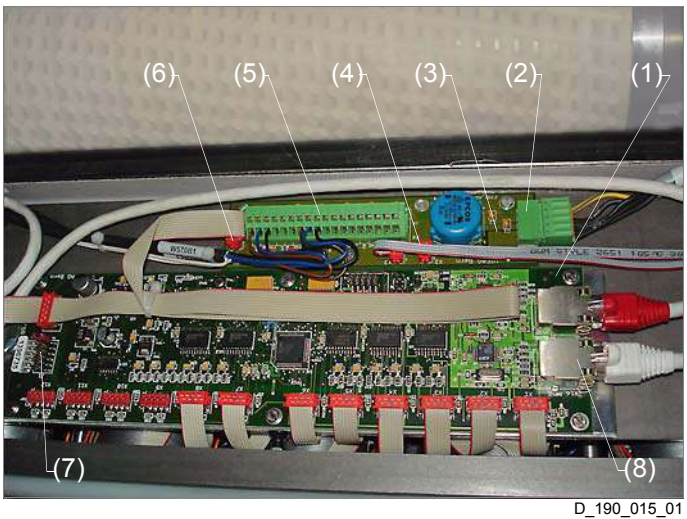

D_190_015_01

(1) Electronic ink key controller device (E-FSR)
(2) FMB-AP power supply
(3) Ink knife bar connection print (FMB-AP)
(4) Power supply of ink keys
(5) Connection for ink level sensors
(6) Power supply of E-FSR and level message of the ink level sensors
(7) Jumper for ink level input
(8) Ethernet connection

2.3 Portable ink fountain

Inking units with integrated portable ink fountain drives can be equipped with either four 1/4 or two 1/2 portable ink fountains (Fig. 6).
The ink is applied by the scoop roller (1) onto the ink fountain roller (2).

The drive of the ink fountain roller drives the drive shaft (2) via a chain (1) with the pinions (3) (Fig. 7).

Fig. 6 1/4 and 1/2 portable ink fountains

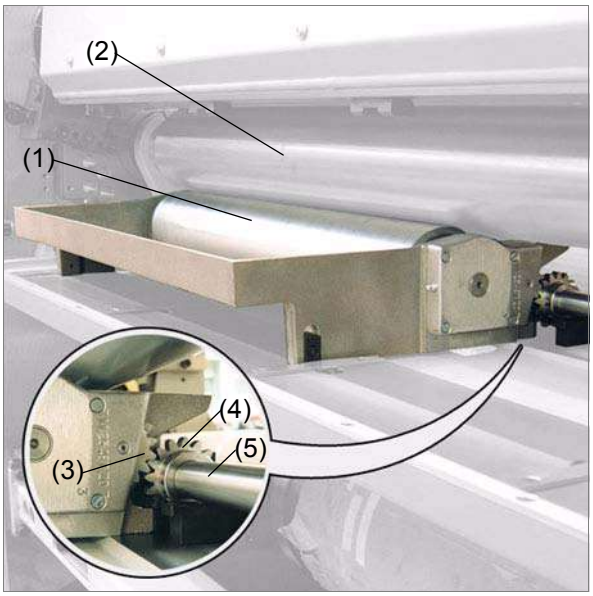

D 124 006 03

(1) Scoop roller
(2) Ink fountain roller
(3) Spur gear
(4) Pinion
(5) Drive shaft

Fig. 7 Portable ink fountain drive

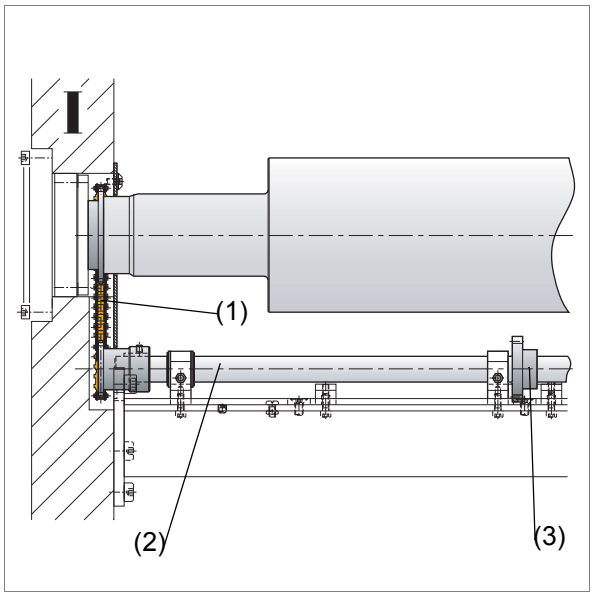

D37e_I004M

(1) Chain
(2) Drive shaft
(3) Pinion

3 Replace components

Contents

This chapter contains the following information:

- Chapt. 3.1 WIFAG article numbers
- Chapt. 3.2 Replacing the ink level sensor
- Chapt. 3.3 Replacing components of the ink level control
- Chapt. 3.4 Replacing valve cartridge on the ink valve
- Chapt. 3.5 Replace components of the ink pump

Specification

For safety reasons only the replacement work described in these operating instructions may be performed! All replacement work not described herein must be performed by qualified WIFAG personnel.

3.1 WIFAG article numbers

Tab. 1 Overview of components and accessories

Article	Obtainable only from WIFAG	Can be ordered from WIFAG
Ink level sensor	----------	115601
Ink knife bar connection print (FMB-AP)	1393914	
Electronic ink key controller device (E-FSR)	1396735	----------
Valve cartridge	----------	9006175
Bushing with special grease ASEOL Aquares EP 810-60	----------	A96718

3.2 Replacing the ink level sensor

Requirements

- Production group / function group at standstill
- Work on the electrical system may be performed only by specially trained **technicians**.
- Read Chapt. 8.9 Carrying out repairs in Reg. 2 Important for your safety in the *System* file.

Materials needed

- Screwdriver no. 2
- Warning signs *Work is in progress!*
- Reg. 3 Control elements

WARNING	
	Risk of injury! **Risk of being trapped and crushed** by swiveling ink knife bar! => Keep hands at a safe distance from the ink knife bar. => Swivel ink knife bar only when no persons are in the danger zone.

WARNING	
	Risk of injury! **Risk of being trapped and crushed** by rotating rollers and cylinders! => De-allocate function group from the production group at the terminal and electrically disable (push the *SAFE-STOP* pushbutton). => Place *Work in progress!* warning signs on the corresponding terminals and control panels.

WARNING	
	Risk of injury! **Injury through cuts** from ink knives! => Observe the danger zone of the ink knife. => Touch ink knife only when wearing protective gloves.

Replacing the ink level sensor

1. On the terminal, change to the Ink level mask.
2. Switch off ink supply.
3. On the terminal, change to the Menu Printer \ Inking unit mask.
4. Swing away ink knife bar.
5. Electrically disable function group with the *SAFE-STOP* pushbutton.
6. Remove plug (1) and loosen retaining screws (2) (Fig. 8).
7. Tighten new ink level sensor (3) and fit plug (1).
8. Electrically enable function group with the *SAFE-STOP* pushbutton.
9. Remove *Work is in progress!* warning sign.
10. Swing on ink knife bar.
11. On the terminal, change to the Ink level mask.
12. Switch on ink supply.

Test the ink level sensor

13. Test the ink level sensor (Chapt. 4.3.1 Testing the ink level sensor).

> The ink level sensor is now replaced

Fig. 8 Replacing the ink level sensor

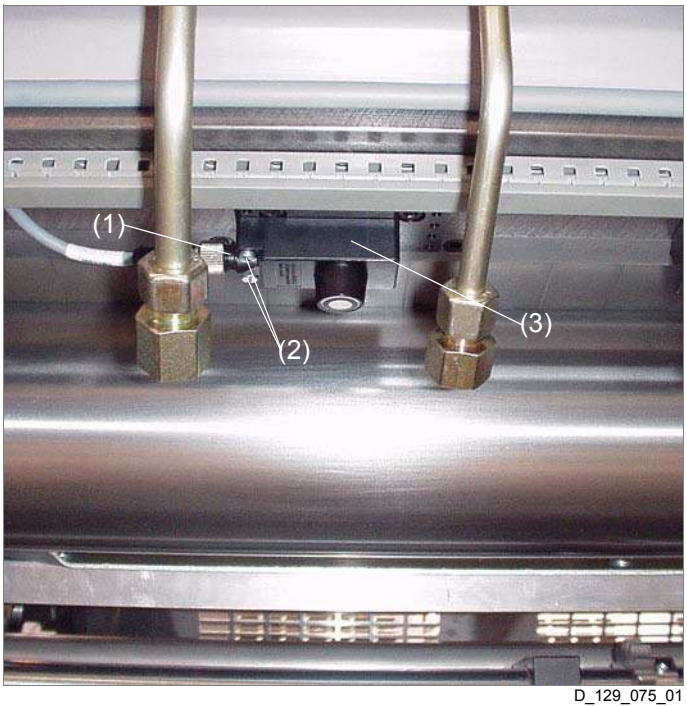

D_129_075_01

(1) Connector plug
(2) Retaining screws
(3) Ink level sensor

3.3 Replacing components of the ink level control

Requirements

- Production group / function group at standstill
- Work on the electrical system may be performed only by specially trained **technicians**.
- Read Chapt. 8.9 Carrying out repairs in Reg. 2 Important for your safety in the *System* file.

Materials needed

- Allen key set
- Screwdriver no. 2
- Special grease: ASEOL Aquares EP 810-60
- Warning signs *Work is in progress!*
- Reg. 3 Control elements
- Chapt. 2.3.3 Ink key controller device addressing in Reg. 11 Ink knife bar
- Chapt. 2.1 Replacing electrical devices in general in Reg. 11 Electrical setting and commissioning instructions in the *System* file

⚠ WARNING	**Risk of injury!** **Risk of being trapped and crushed** by swiveling ink knife bar! => Keep hands at a safe distance from the ink knife bar. => Swivel ink knife bar only when no persons are in the danger zone.

⚠ WARNING	**Risk of injury!** **Risk of being trapped and crushed** by rotating rollers and cylinders! => De-allocate function group from the production group at the terminal and electrically disable (push the *SAFE-STOP* pushbutton). => Place *Work in progress!* warning signs on the corresponding terminals and control panels.

WARNING	**Risk of injury!** **Injury through cuts** from ink knives! => Observe the danger zone of the ink knife. => Touch ink knife only when wearing protective gloves.

Replacing component

1. On the terminal, change to the Ink level mask.
2. Switch off ink supply.
3. On the terminal, change to the Menu Printer \ Inking unit mask.
4. Swing away ink knife bar.
5. Electrically disable function group with the *SAFE-STOP* pushbutton.
6. Remove cover (1) (Fig. 9).
7. Replace component (Chapt. 2.1 Replacing electrical devices in general in Reg. 11 Electrical setting and commissioning instructions in the *System* file).
8. Clean mounting surfaces of the cover (1).
9. Coat mounting surfaces of the cover (1) with grease (ASEOL Aquares).
10. Fit and secure cover (1).
11. Electrically enable function group with the *SAFE-STOP* pushbutton.
12. Remove *Work is in progress!* warning sign.
13. On the terminal, change to the Ink level mask.
14. Switch on ink supply.

Test ink level control

15. Test ink level control (Chapt. 4.3.2 Testing the ink level control).

> The component is now replaced.

Fig. 9 Ink knife bar cover

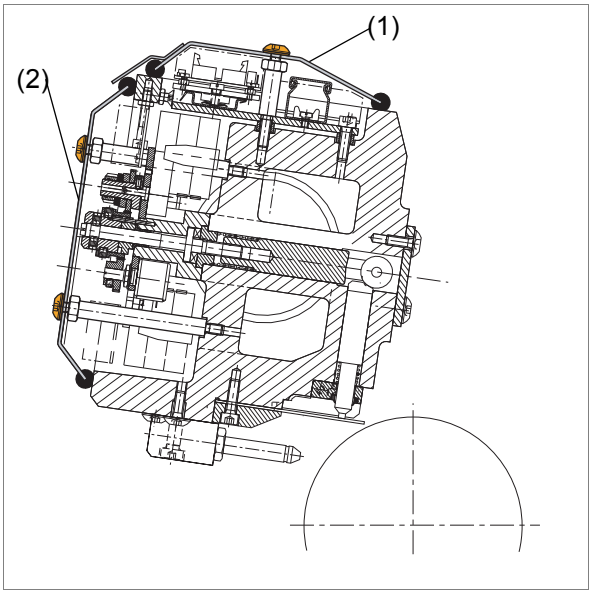

D47S_K006M

(1) Cover for ink key control
(2) Motor unit cover

Fig. 10 Ink level control

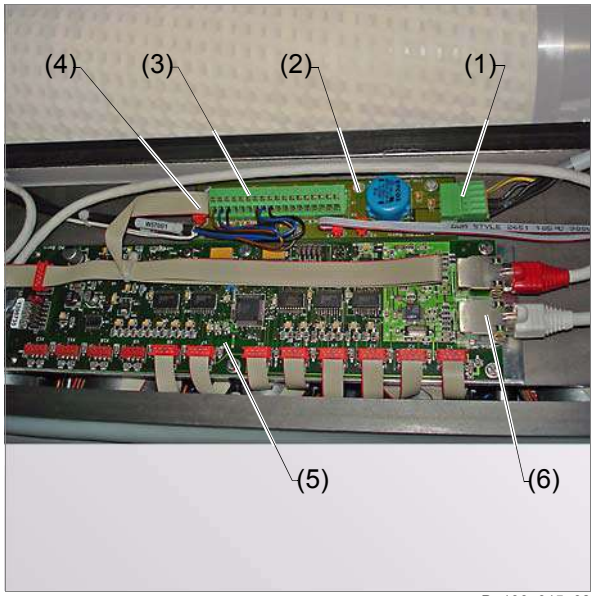

D_190_015_02

(1) FMB-AP power supply
(2) Ink knife bar connection print (FMB-AP)
(3) Connection for ink level sensors
(4) Power supply to E-FSR and level message of the ink level sensors
(5) Electronic ink key controller device (E-FSR)
(6) Ethernet connection

3.4 Replacing valve cartridge on the ink valve

Requirements

- Production group / function group at standstill

Materials needed

- Allen key set
- Reg. 3 Control elements

⚠ WARNING	**Risk of injury!** **Damage to eyes** due to printing ink escaping at high pressure (up to 200 bar)! => De-allocate function group from the production group at the terminal and electrically disable (push the *SAFE-STOP* pushbutton). => Close stop-cock between longitudinal line and printing tower hose. => Depressurize the ink valve before disassembling. => Wear protective goggles and protective gloves. => Observe the safety datasheets of the printing ink manufacturer.

1. On the terminal, change to the Ink level mask.
2. Open the concerned ink valve until there is absolutely no pressure.
3. Set pressure on filter-regulator-lubricator unit to 0 bar.
4. Detach air line (2) (Fig. 11).
5. Loosen and remove retaining screws (2) (Fig. 12).
6. Pull out valve cartridge (1).
7. Insert new valve cartridge (1).
8. Attach air line (2) (Fig. 11).
9. Tighten retaining screws (2) (Fig. 12).
10. Set filter-regulator-lubricator units to 6 bar (Chapt. 4.1.3 Setting the filter-regulator-lubricator unit in Reg. 8 Pneumatic system in the *System* file).
11. Open stop-cock between longitudinal line and printing tower hose.
12. Electrically enable function group with the *SAFE-STOP* pushbutton.

Fig. 11 Forward ink valve bank

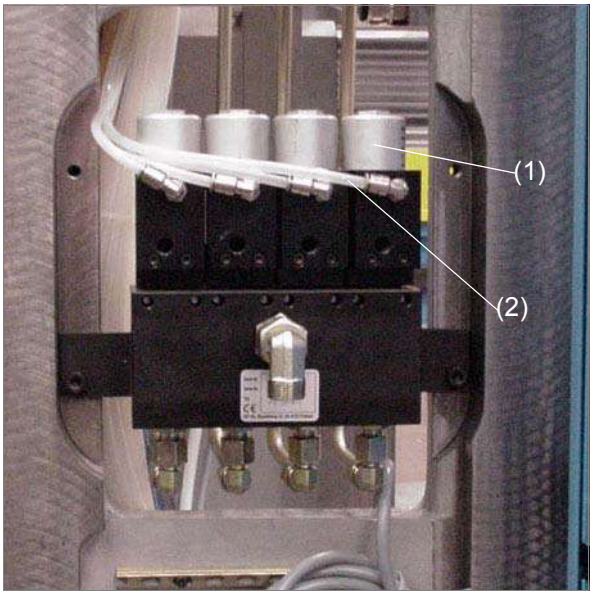

D_129_019_01

(1) Valve cartridge
(2) Air line

Fig. 12 Rear ink valve bank

D_129_080_01

(1) Valve cartridge
(2) Retaining screws

3.5 Replace components of the ink pump

Note

The ink pumps are not included in the WIFAG product scope and are not dealt with in this document.
Information about ink pumps can be found in the manufacturer's documentation.

4 Basic settings

Contents

This chapter contains the following information:

- Chapt. 4.1 Setting
- Chapt. 4.2 Calibration
- Chapt. 4.3 Testing

Specification

For safety reasons only the adjustment work described in these operating instructions may be performed! All adjustment work not described herein must be performed by qualified WIFAG personnel.

4.1 Setting

Note

No adjustment work is necessary on this sub-function group.

4.2 Calibration

Note

No calibrations are necessary on this sub-function group.

4.3 Testing

4.3.1 Testing the ink level sensor

Requirements

- Production group / function group at standstill

Materials needed

- Reg. 3 Control elements

WARNING	**Risk of injury!** **Risk of being trapped and crushed** by rotating gear-wheels and rotating ink fountain roller! => Observe danger zone. => Keep hands at a safe distance from gearwheels and ink fountain roller. => Turn operating mode switch to position *MAKEREADY* when performing makeready work.

1. On the terminal, change to the Menu Test \ Ink sensor mask.

> The actual values (fill amounts) of the zones are visible.

Note

Zone A is always on the operator side (side I).

2. Hold an object under the ink sensor of zone A.

> The actual value display of the corresponding zone increases.

3. Repeat the procedure for the other zones.
4. On the terminal, change to the Information mask.

> The ink level sensor is now tested.

4.3.2 Testing the ink level control

Requirements

- Production group / function group at standstill

Materials needed

- Reg. 3 Control elements

CAUTION	**Machine damage!** **Soiling** in the area of the ink trough cross-member due to ink leakage during manual operation! => Insert ink trough. => Observe ink feed.

1. On the terminal, change to the Ink level mask.
2. Switch on ink supply.
3. Fill corresponding ink trough.

> The ink valve of the corresponding zone is opened.

> The actual value display of the corresponding zone increases.

4. Repeat the procedure for the other zones.
5. On the terminal, change to the Information mask.

> The ink level control is now tested.

10 Ink fountain roller and ink pickup roller

1 Overview **10.3**

2 Construction and function **10.4**
2.1 Ink fountain roller **10.5**
2.2 Drive control **10.6**
2.3 Ink pickup roller **10.7**

3 Replace components **10.8**
3.1 WIFAG article numbers **10.8**
3.2 Replacing the ink fountain roller drive and coupling **10.9**
3.3 Replace drive controller **10.12**
3.4 Replace pneumatic cylinder **10.12**

4 Basic settings **10.12**
4.1 Setting **10.13**
4.1.1 Set ink pickup roller throwon 10.13
4.2 Calibration **10.16**
4.3 Testing **10.17**
4.3.1 Resting the ink fountain roller drive 10.17

1 Overview

Fig. 1 Overview of ink fountain roller and ink pickup roller, view from side I

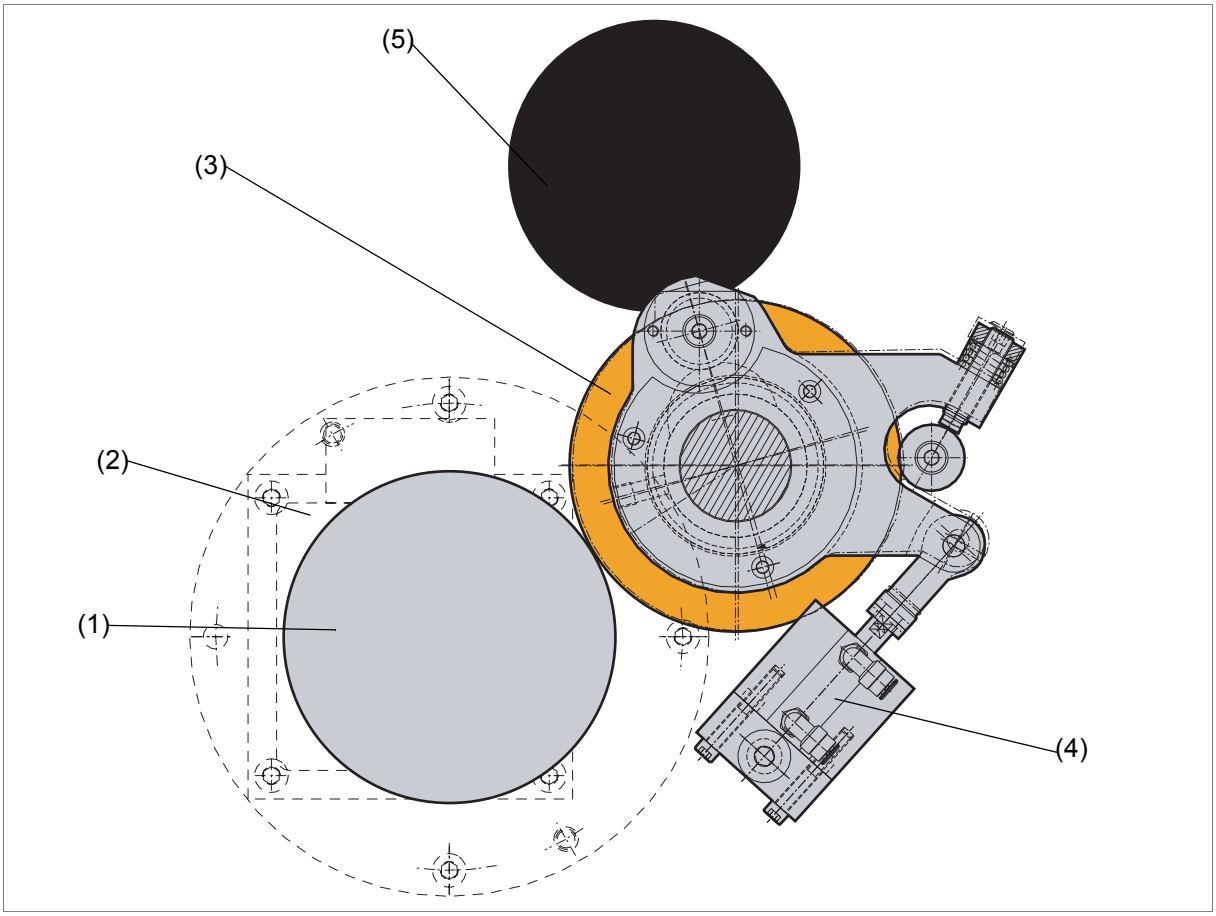

D47S_J001M

(1) Ink fountain roller (Chapt. 2.1 Ink fountain roller)
(2) Ink fountain roller drive (Chapt. 2.1 Ink fountain roller; Chapt. 2.2 Drive control)
(3) Ink pickup roller (Chapt. 2.3 Ink pickup roller)
(4) Ink pickup roller throwon (Chapt. 2.3 Ink pickup roller)
(5) Rubber roller (Reg. 15 Rubber rollers)

2 Construction and function

Contents

This chapter contains the following information:

- Chapt. 2.1 Ink fountain roller
- Chapt. 2.2 Drive control
- Chapt. 2.3 Ink pickup roller

2.1 Ink fountain roller

The ink fountain roller (1) transfers the ink to the ink pickup roller (2) (Fig. 2).
The thickness of the ink film on the ink fountain roller (1) is determined by the distance between the ink knife and the ink fountain roller (1). The quantity of ink on the ink pickup roller (2) is determined by the speed of the ink fountain roller (1).

Note

Information on the ink knife can be found in Chapt. 2.2 Ink key and ink knife in Reg. 11 Ink knife bar.

The ink fountain roller is driven by the ink fountain roller drive (1) on side I (Fig. 3).
The ink fountain roller drive (1) also drives the scoop rollers in the portable ink fountains.

Note

Information on the scoop roller drive can be found in Chapt. 2.3 Portable ink fountain in Reg. 9 ink supply.

Fig. 2 Ink fountain roller

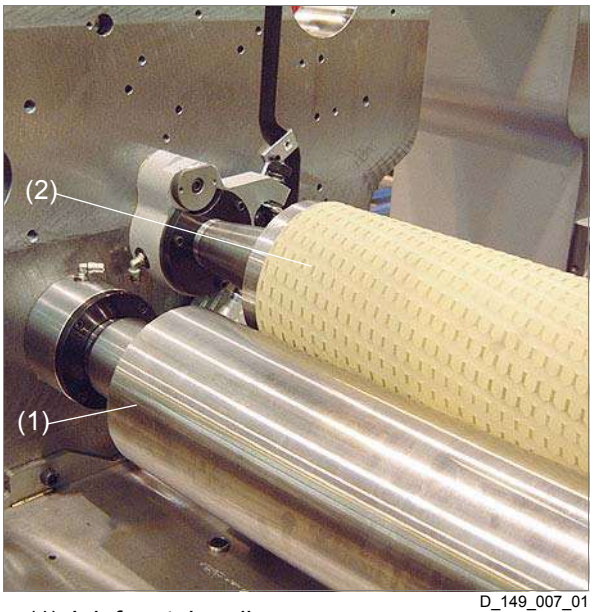

D_149_007_01

(1) Ink fountain roller
(2) Ink pickup roller

Fig. 3 Ink fountain roller drive, side I

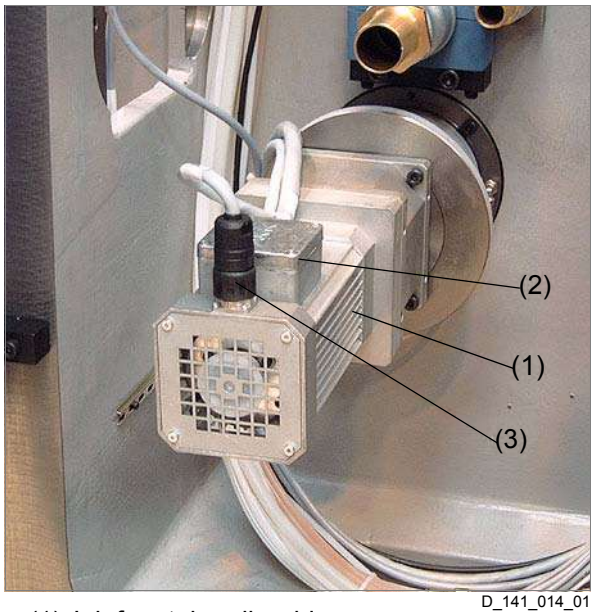

D_141_014_01

(1) Ink fountain roller drive
(2) Connection box for power supply
(3) Resolver connector

2.2 Drive control

The drive control is installed in the bridge boxes (+BK BU / +BK BO) (Chapt. 1 Overview in Reg. 7 Electrical and control systems).
The resolver (1) integrated in the drive reads the speed of the ink fountain roller and transmits the value to the drive control (Fig. 4).
During production the speed of the ink fountain roller can be regulated by ± 20%.

Note

Further information about the drive control can be found in Reg. 10 AMKASYN in the *System* file.

Fig. 4 Resolver in the ink fountain roller drive, side I

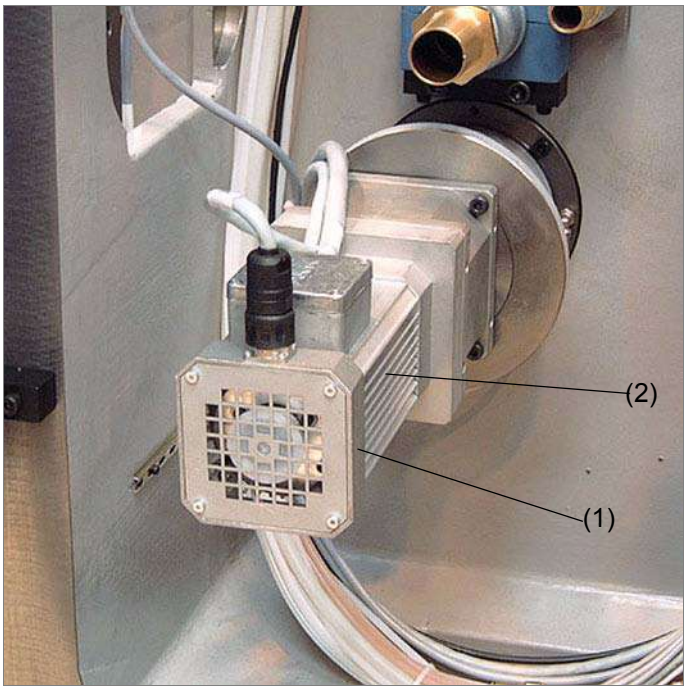

D_141_014_02

(1) Resolver
(2) Ink fountain roller drive

2.3 Ink pickup roller

The ink pickup roller (2) transfers the ink from the ink fountain roller (1) to the first following rubber roller (Fig. 5). The recess in the middle of the ink pickup roller (2) divides and limits the ink feed to the width within half a web.

Note

Information on the rubber rollers can be found in Reg. 15 Rubber rollers.

The ink pickup roller (2) is thrown off and on with the pneumatic cylinder (2) (Fig. 6). The *ON* position is set with the arrester screw (3).

Note

The pneumatic valve for controlling the ink pickup roller throwon is located on the valve bank.
Information about the pneumatic valve is found in the following chapters:

- Chapt. 1.3 Pneumatic system schematics in Reg. 8 Pneumatic system
- Chapt. 2 Design and function in Reg. 8 Pneumatic system
- Chapt. 2.5 Valve bank in Reg. 8 Pneumatic system

Fig. 5 Ink pickup roller

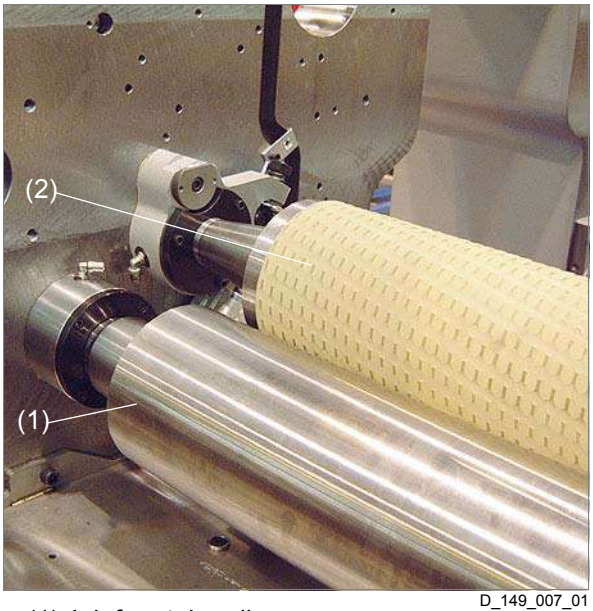

D_149_007_01

(1) Ink fountain roller
(2) Ink pickup roller

Fig. 6 Ink pickup roller throwon

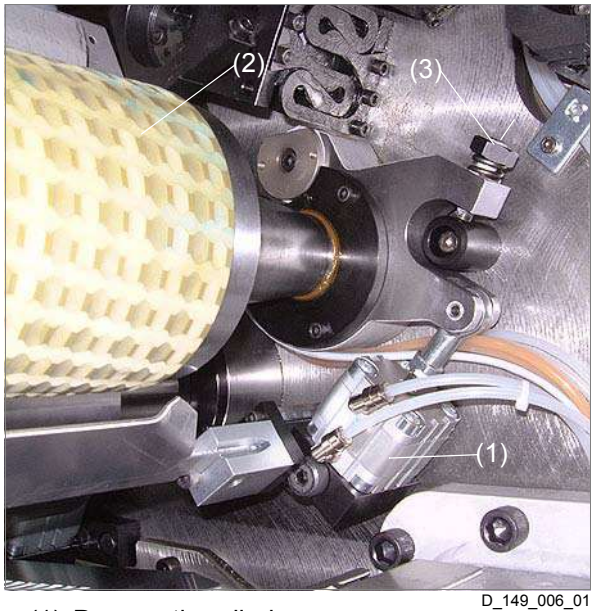

D_149_006_01

(1) Pneumatic cylinder
(2) Ink pickup roller
(3) Arrester screw

3 Replace components

Contents

This chapter contains the following information:

- Chapt. 3.1 WIFAG article numbers
- Chapt. 3.2 Replacing the ink fountain roller drive and coupling
- Chapt. 3.3 Replace drive controller
- Chapt. 3.4 Replace pneumatic cylinder

Specification

For safety reasons only the replacement work described in these operating instructions may be performed! All replacement work not described herein must be performed by qualified WIFAG personnel.

3.1 WIFAG article numbers

Tab. 1 Overview of components and accessories

Article	Obtainable only from WIFAG	Can be ordered from WIFAG
Ink pickup roller	1412915	----------
Ink fountain roller drive	----------	1281897
Clutch complete	----------	A3-18278ZO
Drive controller	----------	1283427
Pneumatic cylinder	----------	A4-12015RO

3.2 Replacing the ink fountain roller drive and coupling

Requirements

- Production group / function group at standstill
- Work on the electrical system may be performed only by specially trained **technicians**.
- Read Chapt. 8.9 Carrying out repairs in Reg. 2 Important for your safety in the *System* file.
- Cause of malfunction is known (ink fountain roller drive, electrical system, control system)

Materials needed

- Warning signs *Work is in progress!*
- Soft cloth
- Cleaning agent
- Allen key set
- Jacking screw M3
- Plastic faced hammer
- 2 Allen screws M8, length 90 mm
- Grease No. 3 (Chapt. 1.3 Lubricant properties; Chapt. 1.4 Lubricant overview in Reg. 5 Lubrication)

⚠ WARNING	**Risk of injury!** **Risk of being trapped and crushed** by rotating axels and shafts! => De-allocate function group from the production group at the terminal and electrically disable (push the *SAFE-STOP* pushbutton). => Place *Work in progress!* warning signs on the corresponding terminals and control panels.

⚠ WARNING	**Risk of injury!** **Danger of crushing** if drive falls down. Weight is 20 kg! => Take precautions that the drive(s) does not fall when being replaced.

Remove ink fountain roller drive

1. Electrically isolate ink fountain roller drive (Chapt. 2.2 Replacing drives in Reg. 11 Electrical setting and commissioning instructions in the *System* file).
2. Loosen retaining screws (2) and lift out ink fountain roller drive (1) (Fig. 7).

Remove coupling

3. Slacken setscrew (3) and pull off coupling disk (4).
4. Remove wedge (7) with the jacking screw.
5. Loosen retaining screw (6) and pull off coupling disk (4).

Install coupling

6. Clean coupling disks (4) and wedge (7).
7. Clean drive shaft (8) and ink fountain roller shaft (5).
8. Press in wedge (7).
9. Coat drive shaft (8) and ink fountain roller shaft (5) with grease no. 3.
10. Mount coupling disk (4) and tighten setscrew (3).
11. Mount coupling disk (4) and tighten retaining screw (6).

Install ink fountain roller drive

12. Lift in ink fountain roller drive (1) and tighten retaining screws (2).
13. Electrically connect ink fountain roller drive (1) (Chapt. 2.2 Replacing drives in Reg. 11 Electrical setting and commissioning instructions in the *System* file).
14. Electrically enable function group with the *SAFE-STOP* pushbutton.
15. Remove *Work is in progress!* warning sign.
16. Test ink fountain roller drive (1) (Chapt. 4.3.1 Resting the ink fountain roller drive).

> The ink fountain roller drive and/or coupling is replaced.

Fig. 7 Ink fountain roller drive

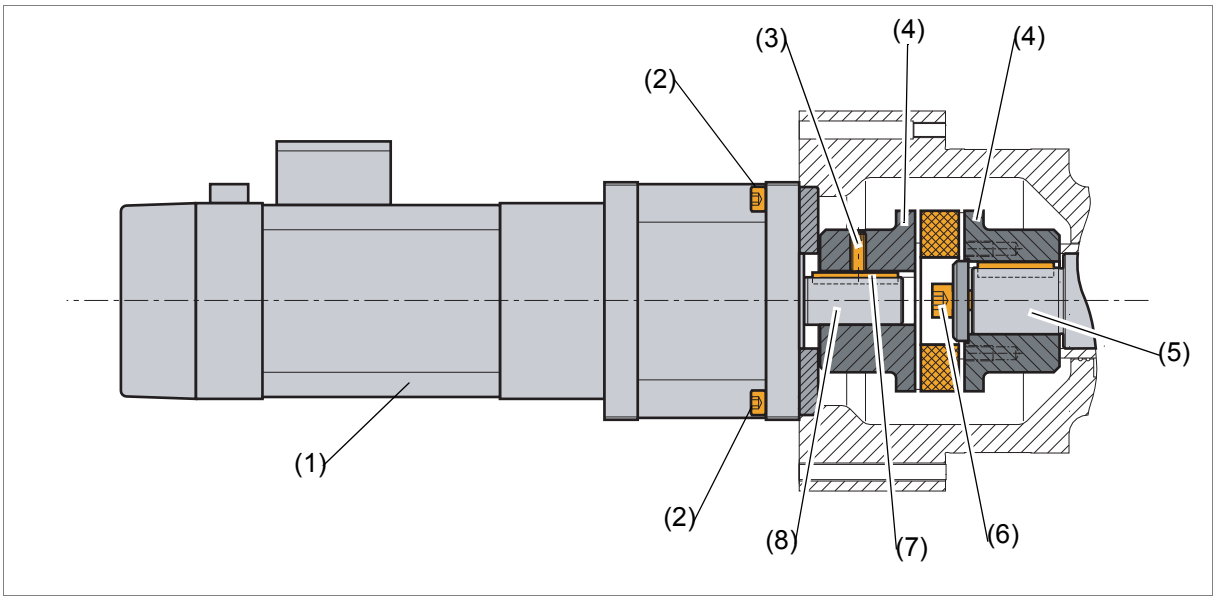

(1) Ink fountain roller drive
(2) Retaining screws
(3) Setscrew
(4) Clutch disk
(5) Ink fountain roller shaft
(6) Retaining screw
(7) Feather key
(8) Drive shaft

3.3 Replace drive controller

Note

More information on this replacement work can be found in the following chapters:

- Chapt. 2.1 Replacing electrical devices in general in Reg. 11 Electrical setting and commissioning instructions in the *System* file
- Chapt. 3.3 AMK drive controller in Reg. 11 Electrical setting and commissioning instructions in the *System* file
- Chapt. 4.3.1 Resting the ink fountain roller drive

3.4 Replace pneumatic cylinder

Note

More information on this replacement work can be found in the following chapters:

- Chapt. 3.8 Replace pneumatic cylinder in Reg. 8 Pneumatic system in the *System* file
- Chapt. 4.1.1 Set ink pickup roller throwon

4 Basic settings

Contents

This chapter contains the following information:

- Chapt. 4.1 Setting
- Chapt. 4.2 Calibration
- Chapt. 4.3 Testing

Specification

For safety reasons only the adjustment work described in these operating instructions may be performed! All adjustment work not described herein must be performed by qualified WIFAG personnel.

4.1 Setting

4.1.1 Set ink pickup roller throwon

Requirements

- Production group / function group at standstill
- Chapt. 4.4 Working in the tunnel / mobile terminal in Reg. 2 Important for your safety has been read.
- Ink pickup roller and arresters are clean (Chapt. 4.18 Clean ink pickup roller and stops in Reg. 6 Maintenance)
- Ink fountain roller is clean (Chapt. 4.12 Clean ink fountain roller, ink knife, ink separators in Reg. 6 Maintenance)

Materials needed

- Soft cloth
- Allen key set
- Fork wrench size 13
- Feeler gauges 0.12 mm and 0.15 mm
- Dial gauge with magnet base or set of feeler gauges
- Portable terminal (Chapt. 2.3 Portable terminal in Reg. 3 Control elements)
- Reg. 3 Control elements

DANGER	**Danger!** **Risk of crushing** due to inadvertent startup of printing units while work is being carried out in the tunnel. => For all work in the tunnels between two printing units, connect the portable terminal to the bridge being worked on. => A connected portable terminal is only to be removed by the person who connected it, or with the express authority of this person.

WARNING	**Risk of injury!** **Injury through cuts** from ink knives! => Observe the danger zone of the ink knife. => Touch ink knife only when wearing protective gloves.

Note

The ink pickup roller (1) may be slightly concave or convex in shape and have concentricityerrors (Fig. 8). If so the distance between ink pickup roller (1) and ink fountain roller (2) should be set to 0.12 mm - 0.15 mm at the narrowed point (in circumference and width). The deviations at the wide points will then be compensated by the appropriate calibration of the ink keys.

The following points need to be observed to obtain a good measuring result:

- Always insert the feeler gauges at the same distance to the ink pickup roller and the ink fountain roller(in the bisecting angle).
  good example (8) / bad example (9) (Fig. 9)
- Measure only on perfect surfaces of the ink pickup roller and the ink fountain roller (no edges).
- Only use the feeler gauges 0.12 mm / 0.15 mm supplied by WIFAG.

1. On the terminal, change to the Menu Printer \ Offset sequences \ Manual mask.
2. Retract the ink knife bar.
3. Connect the portable terminal.
4. Find the highest point (in circumference and width) of ink pickup roller (1) with the dial gauge or feeler gauges and mark on the axle (10) (Fig. 9).
5. Turn the highest point of the ink pickup roller (1) to the contact point (with ink fountain roller).
6. Throw off ink pickup roller (1).
7. Throw on ink pickup roller (1).
8. Check the spacing 0.12 mm over the entire width with feeler gauge (8).
9. The feeler gauge 0.12 mm can easily be axially displaced.
10. If necessary correct the spacing with stop screws (4).
11. Check the spacing 0.15 mm at 4 points of the width with feeler gauge (8).
12. Throw off ink pickup roller (1).
13. Insert feeler gauge 0.15 mm and thrown on ink pickup roller (1).
14. You must **not** be able to pull out feeler gauge 0.15 mm!
15. If the feeler gauge can be pulled out, repeat the setting as of step 8.
16. Remove the portable terminal.
17. Throw on ink knife bar.
18. On the terminal, change to the Information mask.

> The ink pickup roller throwon is now set.

Fig. 8 Setting in the case of shape deviations

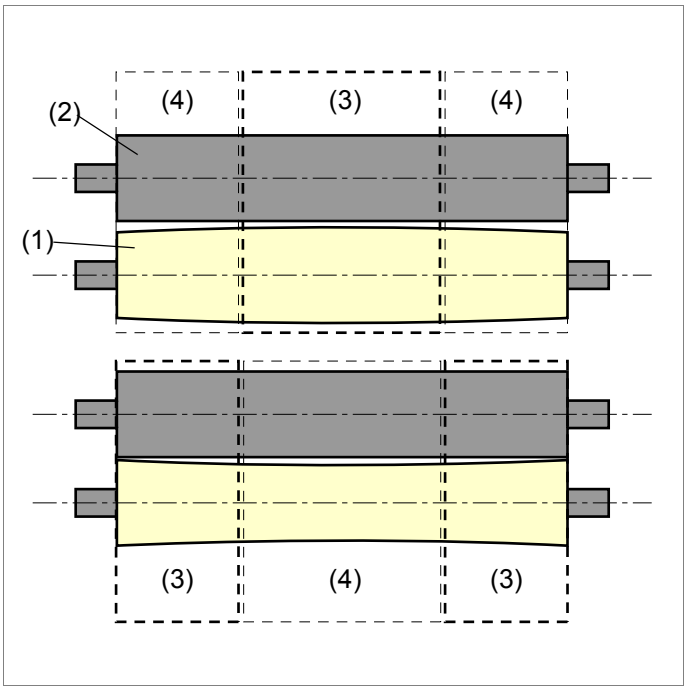

D37e_J002M

(1) Ink pickup roller
(2) Ink fountain roller
(3) Narrowest point
(set to 0.12 mm - 0.15 mm)
(4) Wide points
(to be compensated with the ink key calibration)

Fig. 9 Ink pickup roller throwon, view from side I

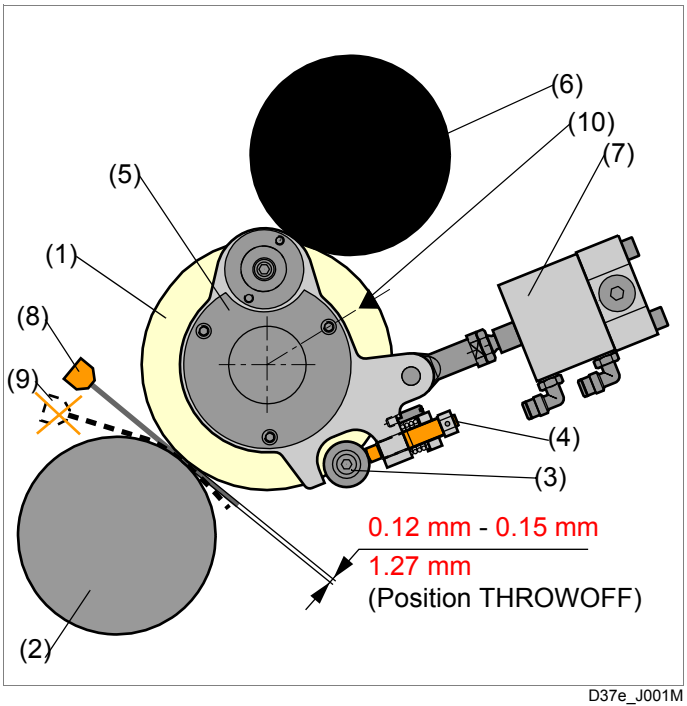

D37e_J001M

(1) Ink pickup roller
(2) Ink fountain roller
(3) Arrester pin
(4) Arrester screw
(5) Ink pickup roller bearing
(6) Ink transfer roller
(7) Pneumatic cylinder
(8) Feeler gauge (good example)
(9) Feeler gauge (bad example)
(10) Example of the marking of the highest point

4.2 Calibration

Note

No calibrations are necessary on this sub-function group.

4.3 Testing

4.3.1 Resting the ink fountain roller drive

Requirements

- Production group / function group at standstill

Materials needed

- Reg. 3 Control elements

WARNING	**Risk of injury!** **Risk of being trapped and crushed** by rotating gear-wheels and rotating ink fountain roller! => Observe danger zone. => Keep hands at a safe distance from gearwheels and ink fountain roller. => Turn operating mode switch to position *MAKEREADY* when performing makeready work.

1. On the terminal, change to the Menu Test \ Ink fountain roller mask.
2. Enter *SETPOINT TEST RUN MODE*.
3. Switch on *TEST MODE*.

> Setpoint and actual value are identical

> The rotation direction of the ink fountain roller corresponds to (Fig. 10)

4. Switch off *TEST MODE*.
5. On the terminal, change to the Information mask.

Fig. 10 Rotation direction of the ink fountain roller

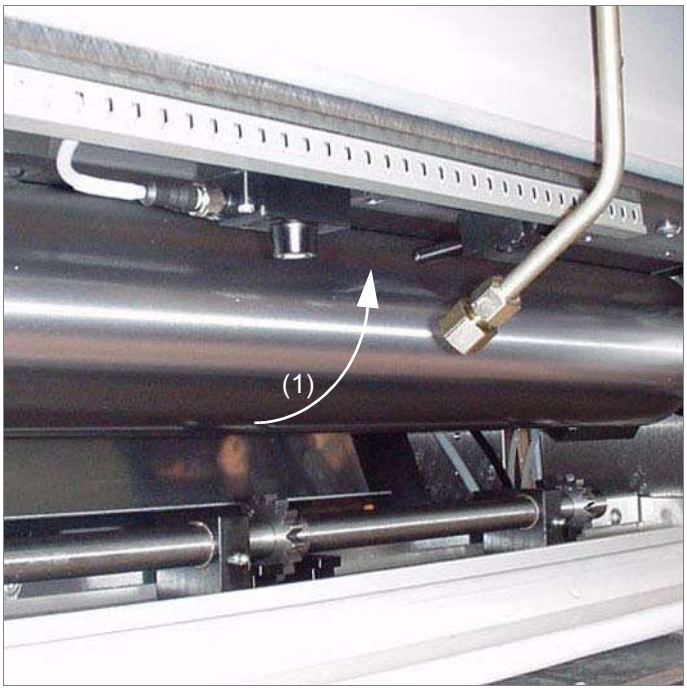

D_129_018_02

(1) Rotation direction of the ink fountain roller

11 Ink knife bar

1 Overview **11.3**

2 Design and function **11.4**
2.1 Ink knife bar throwon **11.4**
2.2 Ink key and ink knife **11.6**
2.3 Ink key control **11.8**
2.3.1 Wiring, connection print 11.9
2.3.2 Wiring, ink key 11.10
2.3.3 Ink key controller device addressing 11.12
2.4 Ink separator **11.14**

3 Replace components **11.15**
3.1 WIFAG article numbers **11.16**
3.2 Replacing the motor unit **11.17**
3.3 Replace the ink knife **11.21**
3.4 Replace pneumatic cylinder **11.26**
3.5 Replacing the magnetic field sensor **11.26**
3.6 Replacing the ink separators **11.26**
3.7 Replacing components of the ink key control **11.27**

4 Basic settings **11.30**
4.1 Setting **11.31**
4.1.1 Set the potentiometer 11.31
4.1.2 Set ink knives 11.33
4.1.3 Setting the magnetic field sensor 11.41
4.2 Calibration **11.44**
4.2.1 Calibrate ink keys 11.44
4.2.2 Calibrating the ink key 11.45
4.3 Testing **11.46**
4.3.1 Testing the ink key 11.46

1 Overview

Fig. 1 Overview of ink knife bar, view from side I

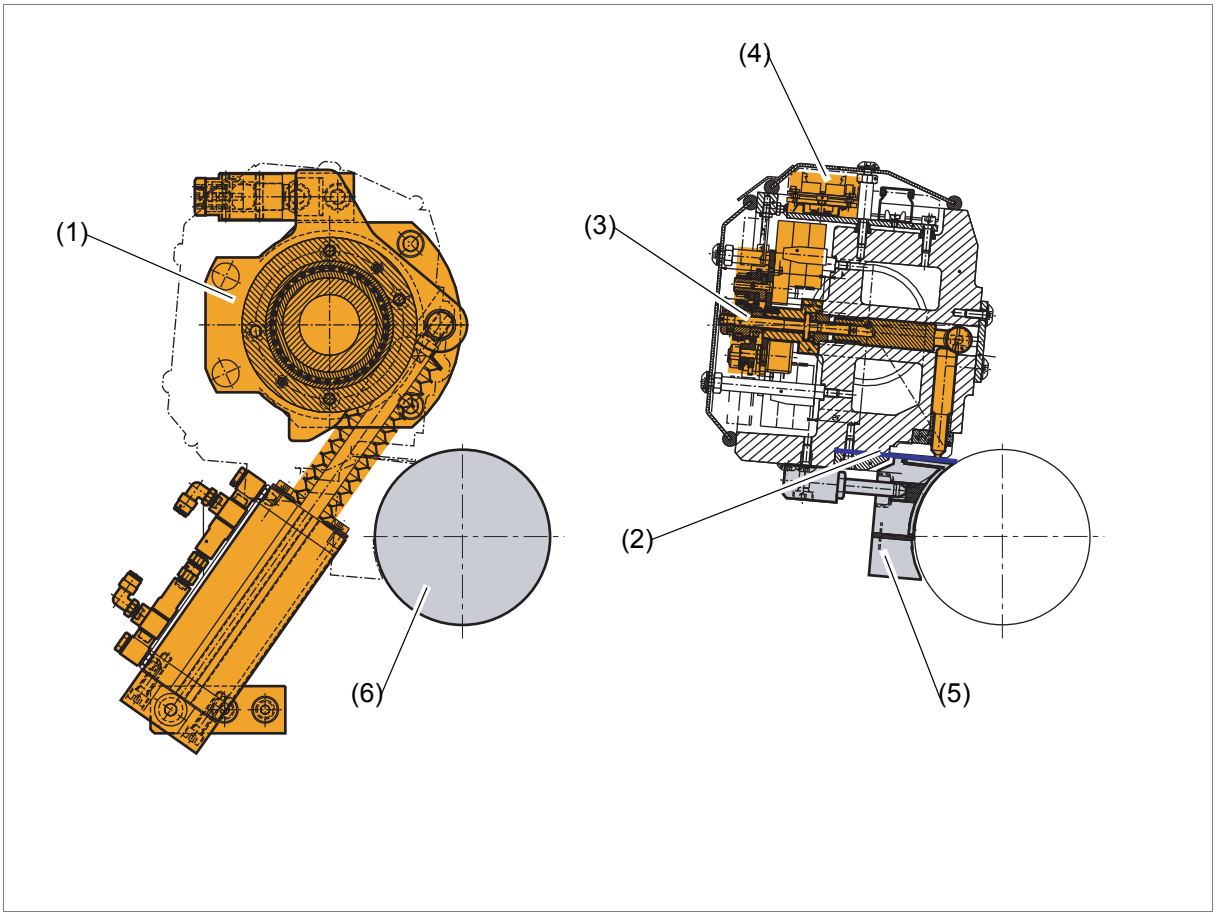

D47S_K001M

(1) Ink knife bar throwon (Chapt. 2.1 Ink knife bar throwon)
(2) Ink knife (Chapt. 2.2 Ink key and ink knife)
(3) Ink key (Chapt. 2.2 Ink key and ink knife)
(4) Ink key control (Chapt. 2.3 Ink key control)
(5) Ink separator (Chapt. 2.4 Ink separator)
(6) Ink fountain roller (Chapt. 2.1 Ink fountain roller in Reg. 10 Ink fountain roller and ink pickup roller)

2 Design and function

Contents

This chapter contains the following information:

- Chapt. 2.1 Ink knife bar throwon
- Chapt. 2.2 Ink key and ink knife
- Chapt. 2.3 Ink key control
- Chapt. 2.4 Ink separator

2.1 Ink knife bar throwon

The pneumatic cylinders (1) on side I and II can throw the ink knife bar (2) on and off (Fig. 2).
The *OFF* position (3) is determined by the limit position of the pneumatic cylinder (1).
The *ON* position (4) is determined by the arrester (5).

Fig. 2 Ink knife bar throwon, position ON/OFF

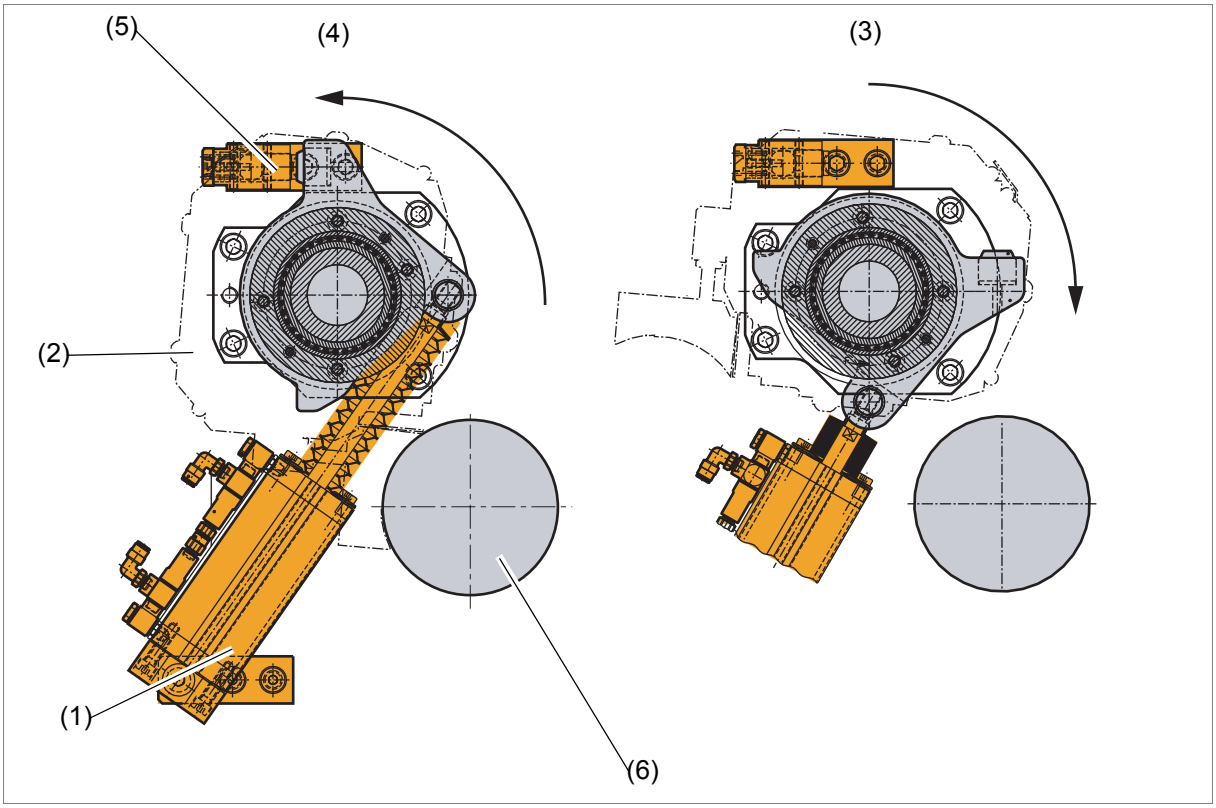

D47S_K002M

(1) Pneumatic cylinder
(2) Ink knife bar
(3) Position OFF
(4) Position ON
(5) Stop
(6) Ink fountain roller

The magnetic field sensor (1) on side I detects the position of the pneumatic cylinder (2) (position *ON*) and passes the information on to machine control (Fig. 3).
Hose restrictors (non-adjustable) limit the speed of throwing the ink knife bar on and off.
The one-way restrictors with catch (3) prevent the ink knife bar from turning to the *OFF* position if there is a pressure drop.

Note

The pneumatic valve for controlling the ink knife bar throwon is located on the valve bank.
Information about the pneumatic valve is found in the following chapters:

- Chapt. 1.3 Pneumatic system schematics in Reg. 8 Pneumatic system
- Chapt. 2 Design and function in Reg. 8 Pneumatic system
- Chapt. 2.5 Valve bank in Reg. 8 Pneumatic system

Fig. 3 Ink knife bar throwon

D_129_025_01

(1) Magnetic field sensor
(2) Pneumatic cylinder
(3) One-way valve with catch

2.2 Ink key and ink knife

The ink keys adjust the individual lamellas of the ink knife (7) opposite the ink fountain roller (6) (Fig. 4). Turning the spindle (2) moves the slide (4). The slide (4) presses the pins (5) on the lamellas of the ink knife (7) and in this way changes the distance between lamellas and ink fountain roller (6). The number of ink keys is dependent on the paper width.

Note

Information about the ink fountain roller is in Chapt. 2.1 Ink fountain roller in Reg. 10 Ink fountain roller and ink pickup roller.

Fig. 4 Ink key and ink knife

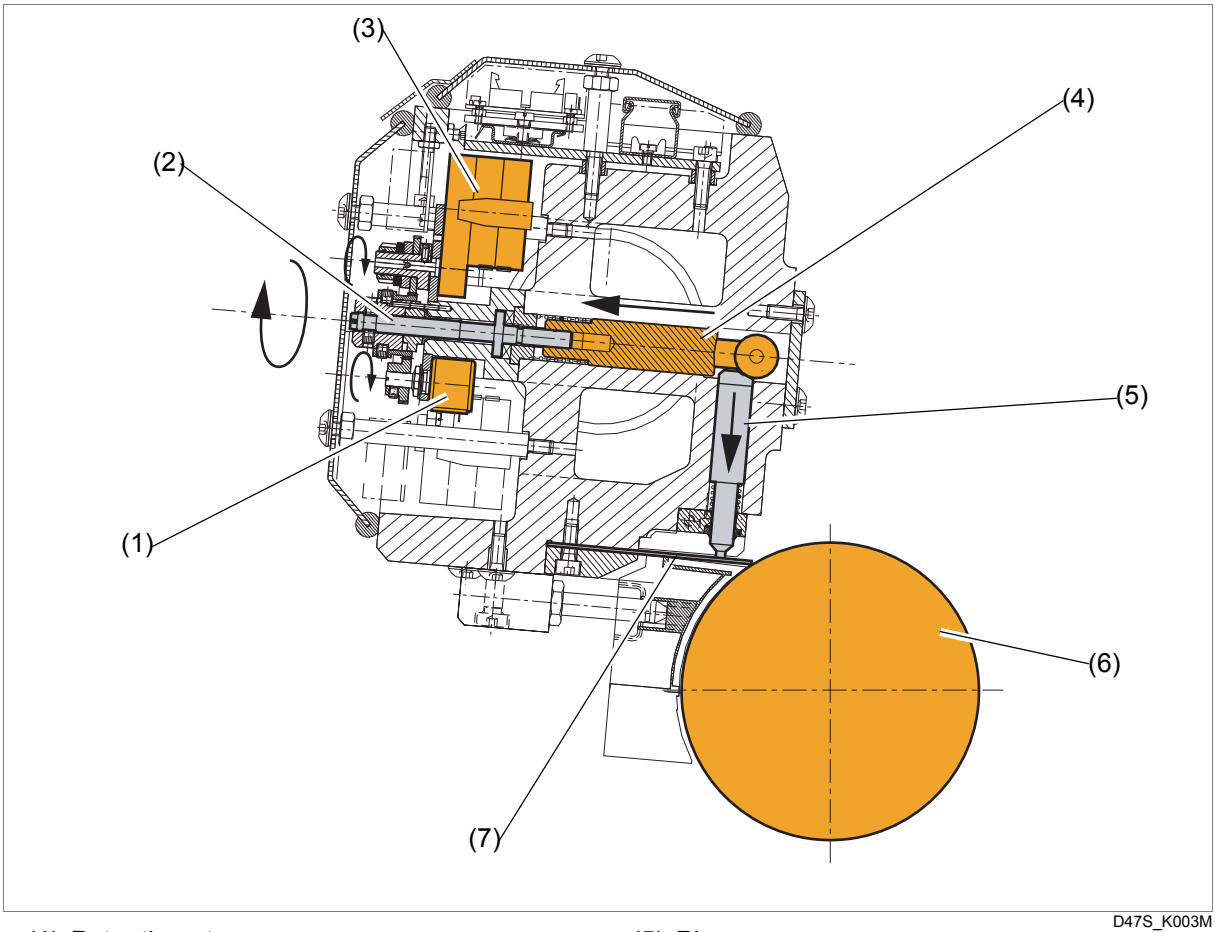

(1) Potentiometer
(2) Spindle
(3) drive
(4) Slide
(5) Pin
(6) Ink fountain roller
(7) Ink knife

So that the ink does not collect on the edge of the ink fountain roller, the outer ink keys (1) are permanently set (Fig. 5), (Fig. 6).
The other ink keys (2) are adjusted by motor units (3).

Fig. 5 Ink keys

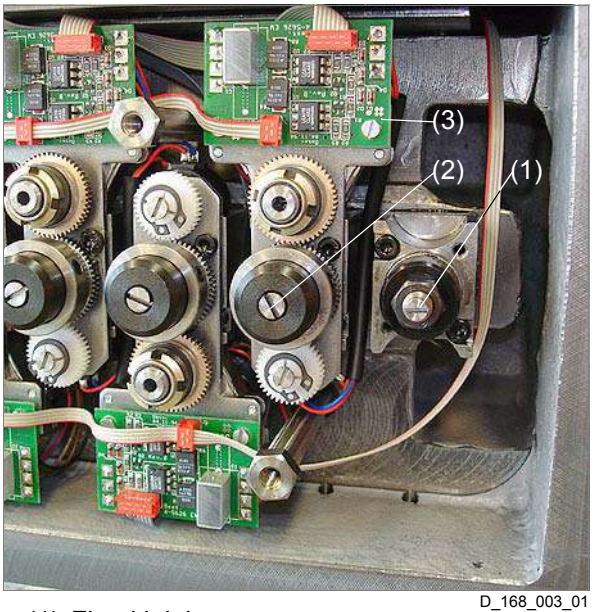

D_168_003_01

(1) Fixed ink key
(2) Adjustable ink key
(3) Motor unit

Fig. 6 Motor unit

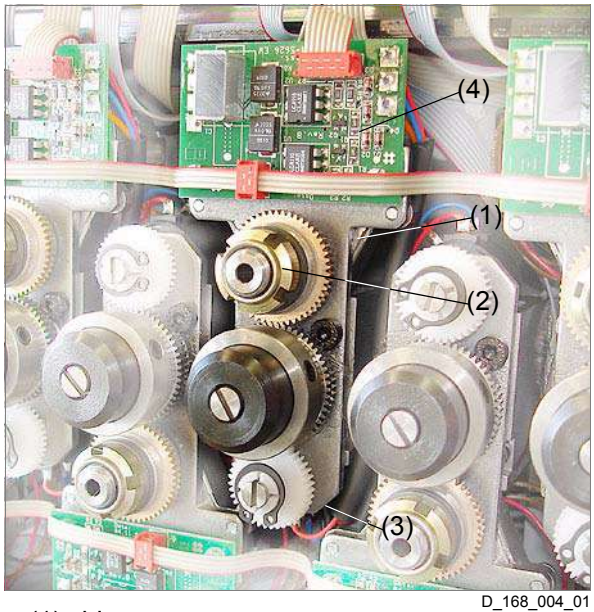

D_168_004_01

(1) drive
(2) Slip clutch
(3) Potentiometer
(4) Control print

2.3 Ink key control

The ink key control is integrated in the ink knife bar (Fig. 7); (Fig. 8).

The ink keys are actuated from the SYMAC control system via Ethernet.

Note

The ink level control is also integrated in the ink knife bar. Further information is available in Chapt. 2.2 Ink level control and ink valve block in Reg. 9 ink supply.

Fig. 7 Control print, motor unit

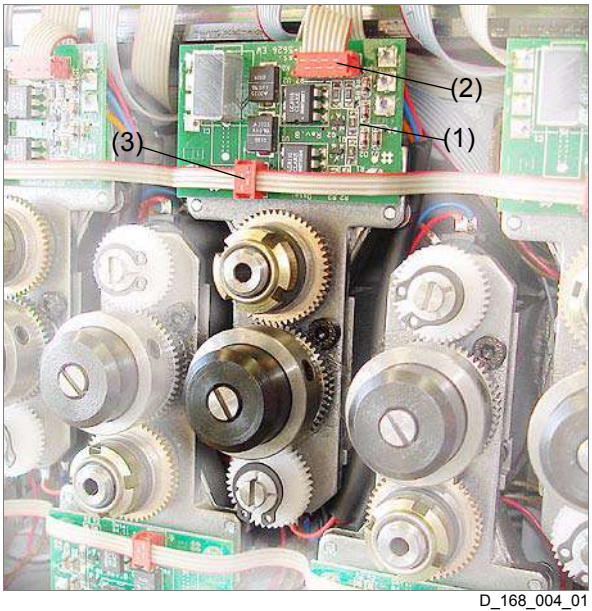

D_168_004_01

(1) Ink key interface (FMB-FSI)
(2) Motor activation and actual value
(3) supply

Fig. 8 Ink key control

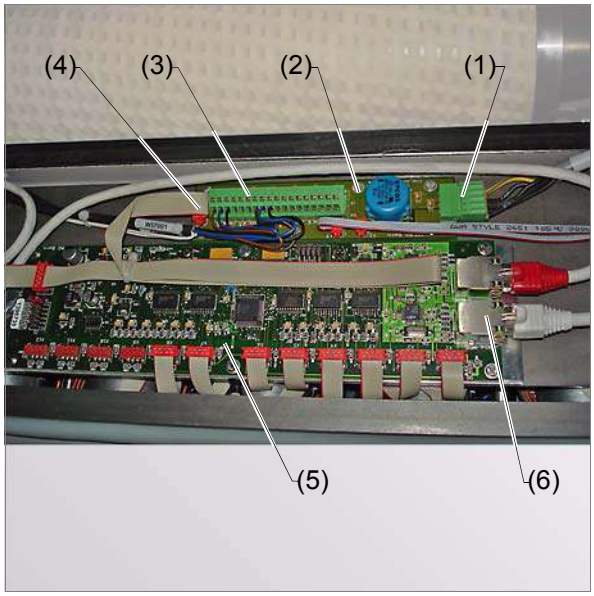

D_190_015_02

(1) FMB-AP power supply
(2) Ink knife bar connection print (FMB-AP)
(3) Connection for ink level sensors
(4) Power supply to E-FSR and level message of the ink level sensors
(5) Electronic ink key controller device (E-FSR)
(6) Ethernet connection

2.3.1 Wiring, connection print

The ink knife bar connection print is installed in the ink knife bar right (side I). (Fig. 9).

The connection print is supplied with a voltage of 24 VDC and 48 VAC from the corresponding bridge box.

Fig. 9 Wiring, connection print (FMB-AP)

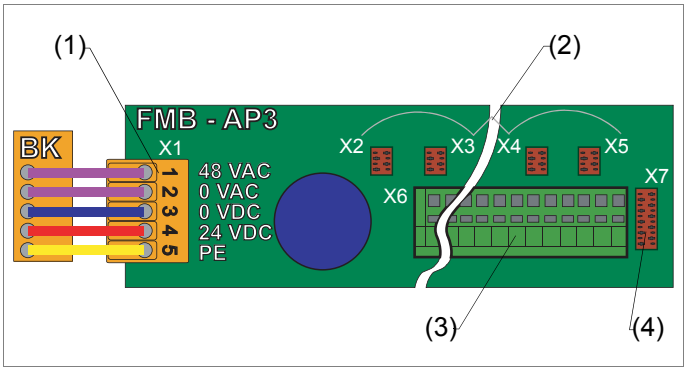

Dx73e_K001E_01

(1) Primary supply of bridge box
(2) Power supply of ink keys
(3) Connection ink level sensors
(4) Power supply to E-FSR and level message of the ink level sensors

Note

More information about Ethernet can be found in Chapt. 2.2.1 Ethernet in Reg. 7 Electrical and control systems and in the WIFAG electrical circuit diagram.

2.3.2 Wiring, ink key

The electronic ink key controller devices (E-FSR) are actuated from the SYMAC control system via Ethernet (Fig. 10). A ink key controller device can actuated a maximum of 12 ink keys.

The drives of the ink keys are operated with a voltage of 48 VAC. The voltage supply is provided by the connection print.

Ink key A1 in the left printing units is connected with plug X1. Ink key A1 in the right printing units is connected with plug X12.
Each E-FSR device in the printing tower can be identified based on jumper J1 and switch 1 and 2.

Note

More information about Ethernet can be found in Chapt. 2.2.1 Ethernet in Reg. 7 Electrical and control systems and in the WIFAG electrical circuit diagram.

Fig. 10 Wiring, ink keys

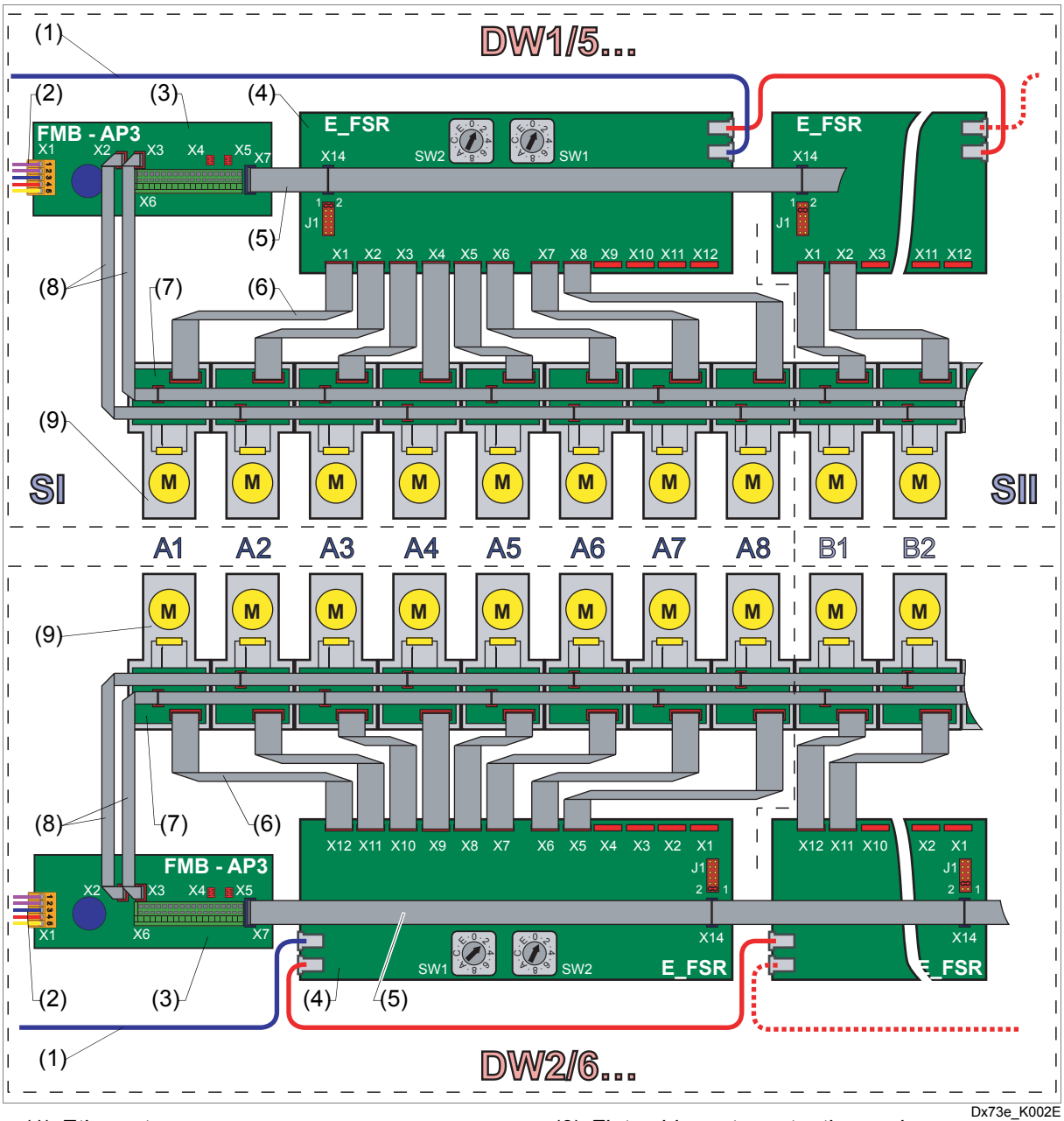

(1) Ethernet
(2) Power supply 24 VDC, 48 VAC
(3) Ink knife bar connection print (FMB-AP)
(4) Electronic ink key controller device (E-FSR)
(5) Flat cable for E-FSR power supply and level message of the ink level sensors
(6) Flat cable motor actuation and Actual value
(7) Ink key interface (FMB-FSI)
(8) Flat cable for FMB-FSI power supply
(9) Motor unit with potentiometer

2.3.3 Ink key controller device addressing

Addressing the ink key controller devices (E-FSR) is different in each printing couple. Addressing is performed using the switches SW1 and SW2. See the WIFAG electrical diagram for the exact addressing.

The corresponding ink key level sensor is assigned to the ink key controller device with the J1 jumper. Addressing is identical in each printing couple. The ink key controller device then receives only the signals of the corresponding ink level sensor. These signals are forwarded via Ethernet to the SYMAC control system. If no jumper is set, no signals of the ink level sensors are received.

Tab. 1 Jumper J1

Cluster	Ink level input (sensor)
1–2	1
3–4	2
5–6	3
7–8	4
9–10	5
11–12	6

Fig. 11 Addressing of E-FSR device/jumper J1

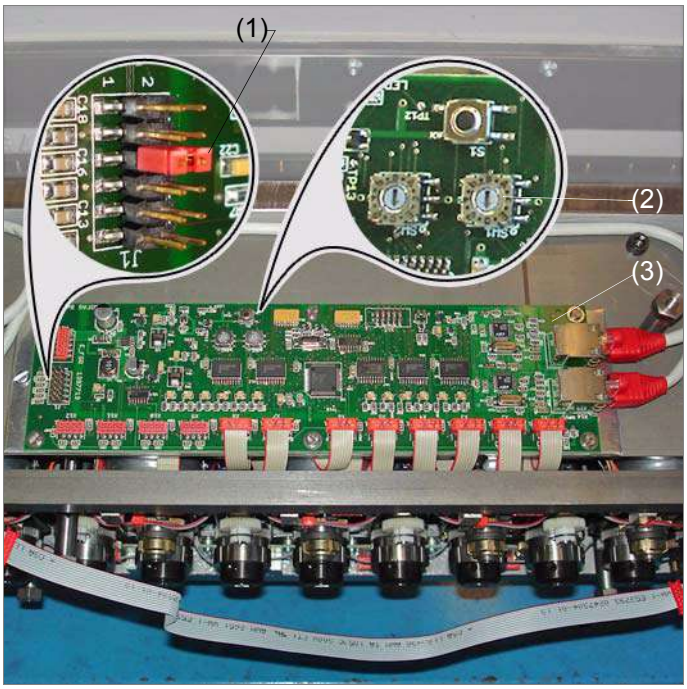

D_189_001_01

(1) Jumper J1
(2) Switch SW1 and SW2
(3) E-FSR device

Example with six ink key controller devices and 54 ink keys in printing couples 1 and 2

Fig. 12 Numbering and addressing of the ink key controller devices

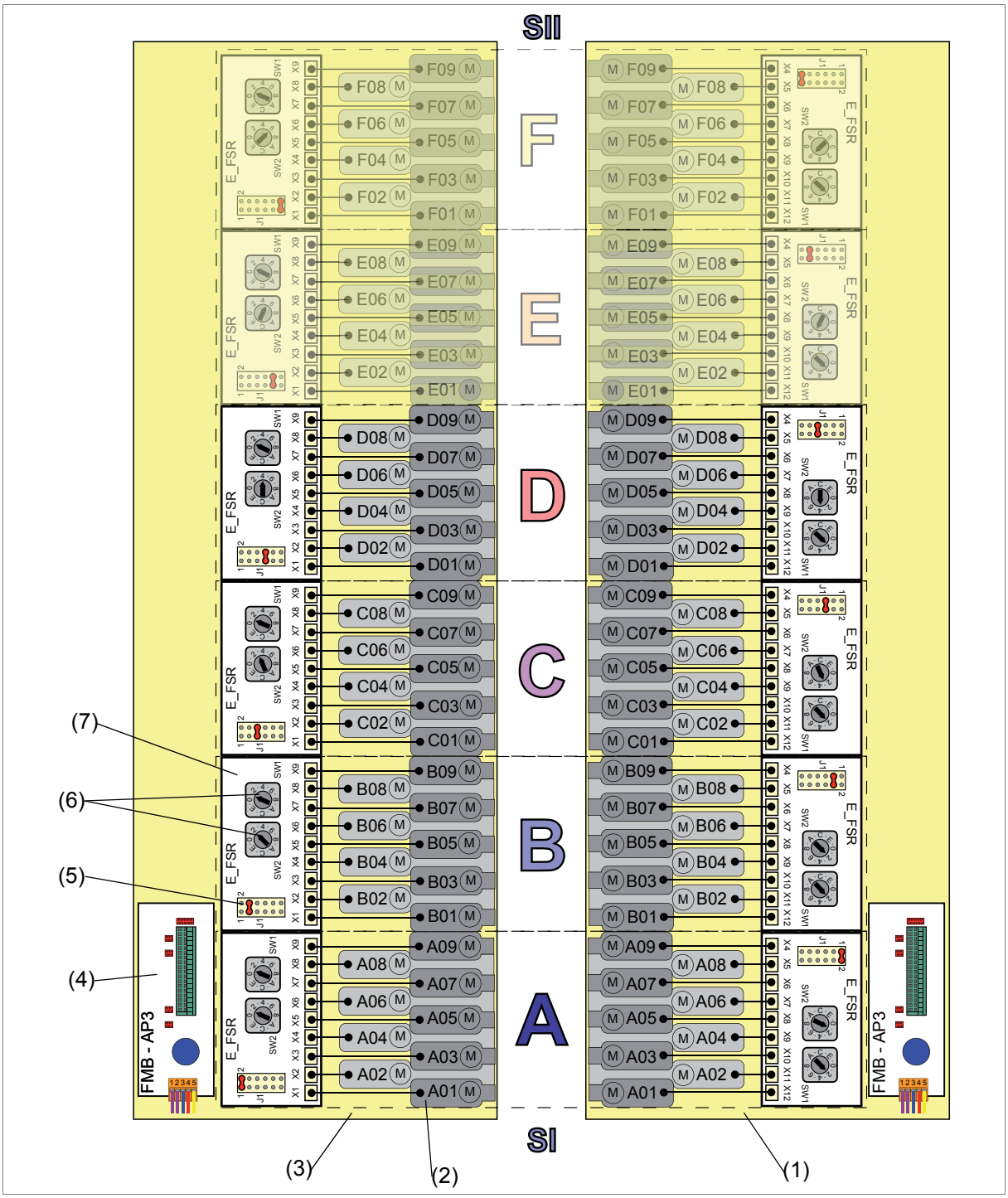

Dx73e_K003E

(1) Ink knife bar printing couple 2
(2) Motor unit
(3) Ink knife bar printing couple 1
(4) Ink knife bar connection print (FMB-AP)
(5) Jumper J1 (for ink level sensor)
(6) Switches SW1 and SW2
(7) Ink key controller device (E-FSR)

2.4 Ink separator

For dividing process colors, ink separators (1) are placed on the holders (2) on the ink knife bar (3) (Fig. 13), (Fig. 14).

Fig. 13 Ink separator

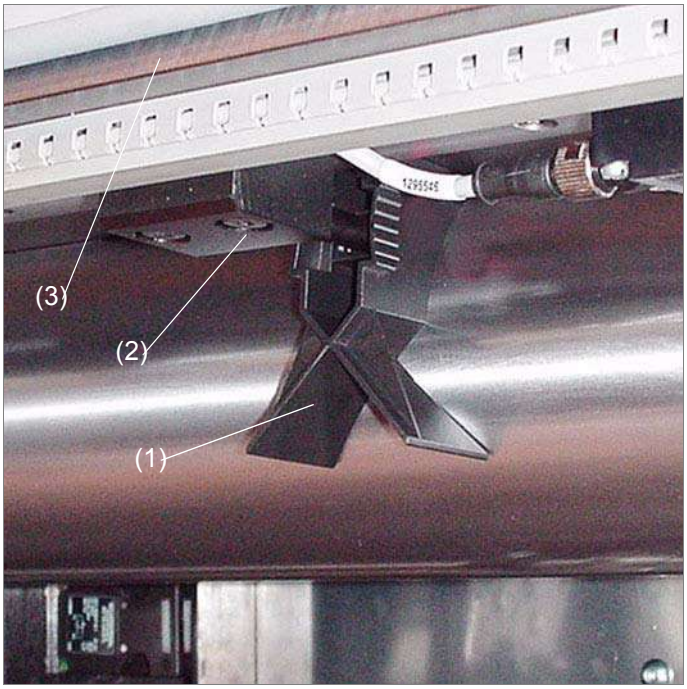

D_129_038_01

(1) Ink separator
(2) Holder
(3) Ink knife bar

Fig. 14 Ink separation on the ink fountain roller

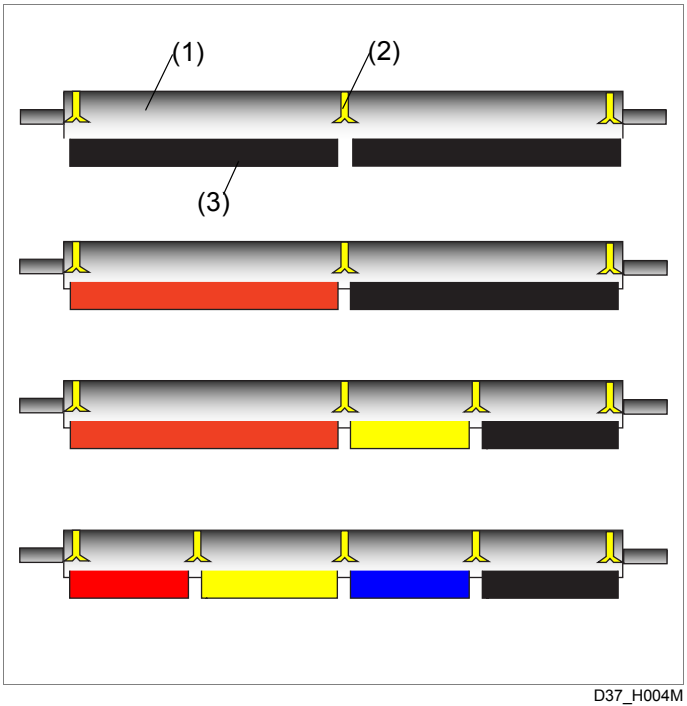

D37_H004M

(1) Ink fountain roller
(2) Ink separator
(3) Portable ink fountain

3 Replace components

Contents

This chapter contains the following information:

- Chapt. 3.1 WIFAG article numbers
- Chapt. 3.2 Replacing the motor unit
- Chapt. 3.3 Replace the ink knife
- Chapt. 3.4 Replace pneumatic cylinder
- Chapt. 3.5 Replacing the magnetic field sensor
- Chapt. 3.6 Replacing the ink separators
- Chapt. 3.7 Replacing components of the ink key control

Specification

For safety reasons only the replacement work described in these operating instructions may be performed! All replacement work not described herein must be performed by qualified WIFAG personnel.

3.1 WIFAG article numbers

Tab. 2 Overview of components and accessories

Article	Obtainable only from WIFAG	Can be ordered from WIFAG
Ink separator	1278725	----------
Motor unit complete incl. ink key interface (FMB-FSI)	1282500	----------
Mount pinion for potentiometer, motor unit	A4-16164ZO	----------
Ink knife	1415310	----------
Mounting device for ink knife (2 x angle brackets)	1294964	----------
Pneumatic cylinder	----------	1277426
Magnetic field sensor	----------	1254445
Slide block for magnetic field sensor	----------	1254446
Ink knife bar connection print (FMB-AP)	1393914	----------
Electronic ink key controller device (E-FSR)	1396735	----------
Bushing with special grease ASEOL Aquares EP 810-60	----------	A96718

3.2 Replacing the motor unit

Requirements

- Production group / function group at standstill
- Work on the electrical system may be performed only by specially trained **technicians**.
- Read Chapt. 8.9 Carrying out repairs in Reg. 2 Important for your safety in the *System* file.

Materials needed

- Allen key set
- Screwdriver no. 4
- Torque wrench with a 3 mm Allen socket
- Special grease: ASEOL Aquares EP 810-60
- Multimeter
- Warning signs *Work is in progress!*
- WIFAG *electrical circuit diagram B*
- Reg. 3 Control elements
- Chapt. 4.1.1 Set the potentiometer
- Chapt. 4.3.1 Testing the ink key

⚠ WARNING	**Risk of injury!** **Risk of being trapped and crushed** by swiveling ink knife bar! => Keep hands at a safe distance from the ink knife bar. => Swivel ink knife bar only when no persons are in the danger zone.

⚠ WARNING	**Risk of injury!** **Risk of being trapped and crushed** by rotating rollers and cylinders! => De-allocate function group from the production group at the terminal and electrically disable (push the *SAFE-STOP* pushbutton). => Place *Work in progress!* warning signs on the corresponding terminals and control panels.

WARNING	**Risk of injury!** **Injury through cuts** from ink knives! => Observe the danger zone of the ink knife. => Touch ink knife only when wearing protective gloves.

Remove motor unit

1. On the terminal, change to the Ink level mask.
2. Switch off ink supply.
3. Unhook screen (1) and remove cover (2) (Fig. 15).
4. On the terminal, change to the Menu Printer \ Inking unit mask.
5. Swing on ink knife bar.
6. Remove all retaining screws (except for 2) on the cover (1) (Fig. 16).
7. Swing away ink knife bar.
8. Remove cover (1) (Fig. 17).
9. Electrically disable function group with the *SAFE-STOP* pushbutton.
10. Switch off power supply of the ink knife bar (48 VAC) according to *electrical circuit diagram B*.
11. Use a voltmeter to check that no voltage is present.
12. Turn ink key (1) on mechanical stop clockwise (Fig. 18).
13. Loosen setscrews (2) and remove pinion (3).
14. Remove ribbon cable on the print (4).
15. Loosen retaining screws (5) and remove motor unit.

Install motor unit

16. Install new motor unit and tighten retaining screws (5) with a tightening torque of 5.1 Nm.

Specification

After installing a new motor unit, check that the leads for the motor and potentiometer are not trapped anywhere as this could result in a short circuit and cause damage to the electrical system of the ink knife bar.

17. Fit pinion (3) on the zone screw (1) and tighten with the setscrews (2).
18. Connect the ribbon cable to the print (4).

Set ink key and test

19. Adjust the potentiometer (Chapt. 4.1.1 Set the potentiometer).
20. Test the ink key (Chapt. 4.3.1 Testing the ink key).
21. Clean mounting surfaces of the cover (1) (Fig. 17).
22. Coat mounting surfaces of the cover (1) with grease (ASEOL Aquares).
23. Fit and secure cover (1).
24. Screw on cover (2) and hook on screens (1) (Fig. 15).
25. Electrically enable function group with the *SAFE-STOP* pushbutton.
26. Remove *Work is in progress!* warning sign.
27. Switch on ink supply.
28. On the terminal, change to the Information mask.

> The motor unit is replaced.

Fig. 15 Remove screens and cover

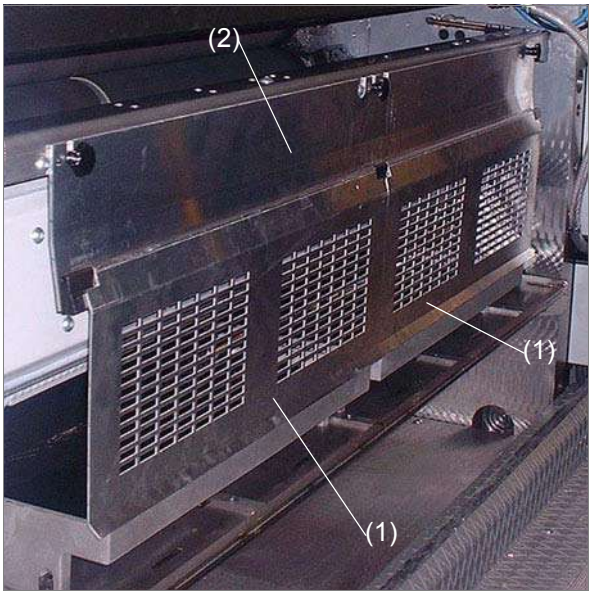

D_131_020_01

(1) Screen
(2) Cover

Fig. 16 Loosen screws, throwon position

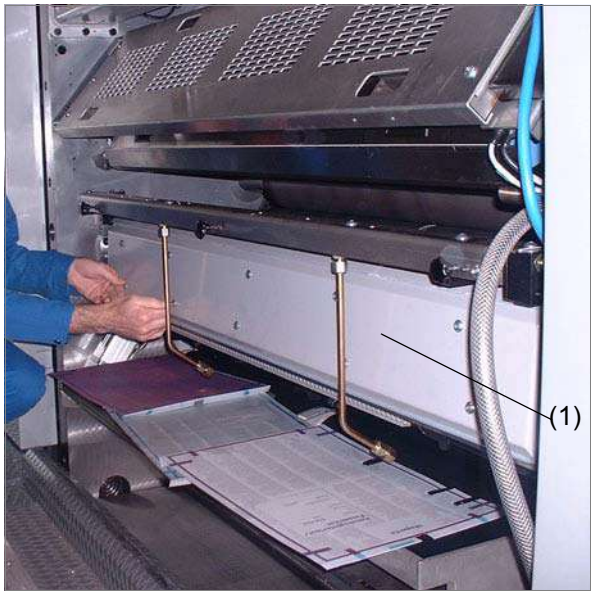

D_131_021_01

(1) Cover

Fig. 17 Remove cover, throwoff position

D_131_022_01

(1) Cover

Fig. 18 Motor unit

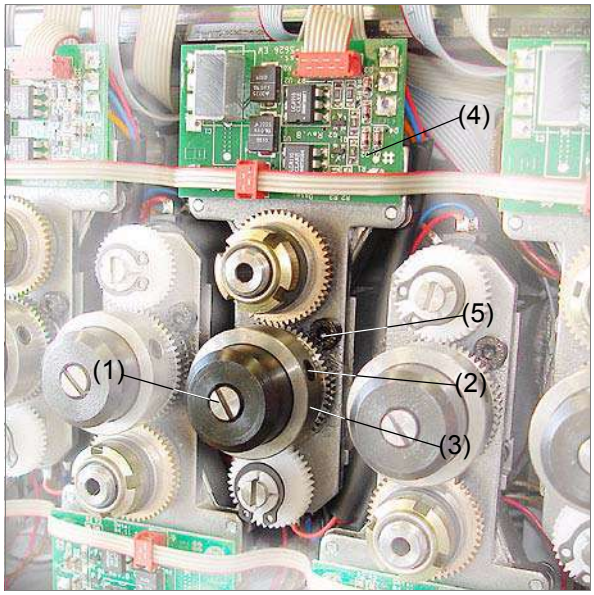

D_168_004_01

(1) Ink key
(2) Setscrew
(3) Pinion
(4) Print
(5) Retaining screw

3.3 Replace the ink knife

Requirements

- Production group / function group at standstill
- Stops of ink knife bar throwon are clean (Chapt. 4.24 Clean stops of ink knife bar throwon in Reg. 6 Maintenance)

Materials needed

- Allen key set
- Screwdriver no. 4
- Diamond whetstone
- Oil No. 2 (Chapt. 1.3 Lubricant properties; Chapt. 1.4 Lubricant overview in Reg. 5 Lubrication)
- Special grease: e.g. Blasolube 540, BP Energrease LS3
- Special grease: Aseol Aquares EP 810-60
- Mounting device (2 x angle brackets)
- Protective gloves
- Warning signs *Work is in progress!*
- Reg. 3 Control elements
- Chapt. 4.1.2 Set ink knives

⚠ WARNING	**Risk of injury!** **Risk of being trapped and crushed** by swiveling ink knife bar! => Keep hands at a safe distance from the ink knife bar. => Swivel ink knife bar only when no persons are in the danger zone.

⚠ WARNING	**Risk of injury!** **Risk of being trapped and crushed** by rotating rollers and cylinders! => De-allocate function group from the production group at the terminal and electrically disable (push the *SAFE-STOP* pushbutton). => Place *Work in progress!* warning signs on the corresponding terminals and control panels.

WARNING	**Risk of injury!** **Injury through cuts** from ink knives! => Observe the danger zone of the ink knife. => Touch ink knife only when wearing protective gloves.

Remove covers

1. On the terminal, change to the Ink level mask.
2. Switch off ink supply.
3. Unhook screen (1) and remove cover (2) (Fig. 19).
4. On the terminal, change to the Menu Printer \ Inking unit mask.
5. Swing on ink knife bar.
6. Remove all retaining screws (except for 2) on the cover (1) (Fig. 20).
7. Swing away ink knife bar.
8. Remove cover (1) (Fig. 21).
9. Electrically disable function group with the *SAFE-STOP* pushbutton.

Remove ink knife

10. Remove ink separator.
11. Secure angle brackets (13) left and right (Fig. 22).
12. Loosen setscrews (9) on the adjustable ink keys (10) max. 1/4 turn.
13. Turn all ink keys (10) counterclockwise until the pin (1) no longer touches the ink knife (3).
14. Loosen nuts (11) on the fixed ink keys (12).
15. Turn all fixed ink keys (12) counterclockwise until the pin (1) no longer touches the ink knife (3).

    > The ink knife (3) tension is released over the entire length.

16. Loosen retaining screws (6) and remove clamping bar (5).
17. Remove ink knife (3).

Install ink knife

18. Smooth mounting surface (4) on the new ink knife (3) with the diamond whetstone.
19. Clean ink knife (3), clamping bar (5) and mounting surfaces (4) (7) and lightly oil with oil No. 2.
20. Mount ink knife (3), push to the base of the ink knife bar flush against the mounting surface (7) and laterally against the cylinder pin.
21. Mount clamping bar (5) and tighten with the clamping bar (6).

22. Remove angle brackets (13) left and right.

Set ink knife

23. Electrically enable function group with the *SAFE-STOP* pushbutton.
24. Swing on ink knife bar.
25. Set ink knife (3) (Chapt. 4.1.2 Set ink knives).
26. Fill gap (2) with grease (e.g. Blasolube 540, BP Energrease LS3).

Mount covers

27. Clean mounting surfaces of the cover (1) (Fig. 21).
28. Coat mounting surfaces of the cover (1) with grease (ASEOL Aquares).
29. Fit and secure cover (1).
30. Screw on cover (2) and hook on screens (1) (Fig. 19).
31. Remove *Work is in progress!* warning sign.
32. On the terminal, change to the Ink level mask.
33. Switch on ink supply.
34. At the terminal, change to the mask Information.

> The ink knife is replaced.

Fig. 19 Remove screens and cover

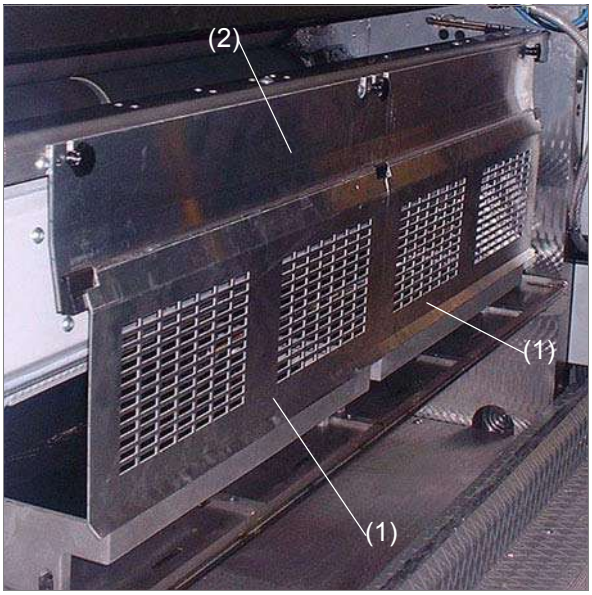

D_131_020_01

(1) Screen
(2) Cover

Fig. 20 Loosen screws, throwon position

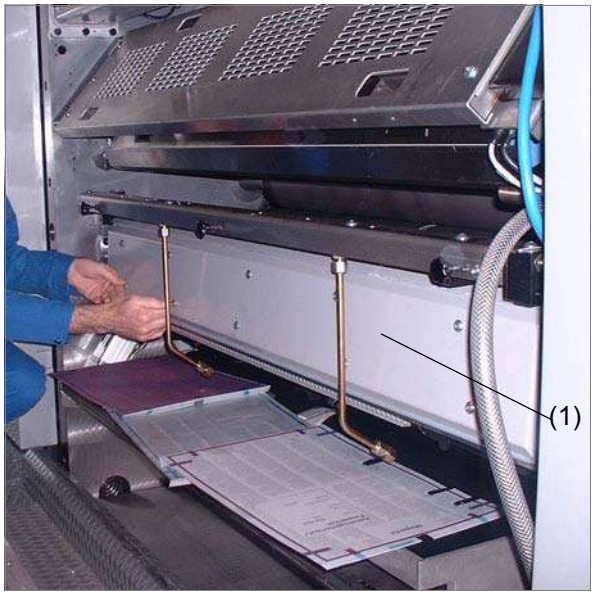

D_131_021_01

(1) Cover

Fig. 21 Remove cover, throwoff position

D_131_022_01

(1) Cover

Fig. 22 Replacing the ink knife, throwoff position

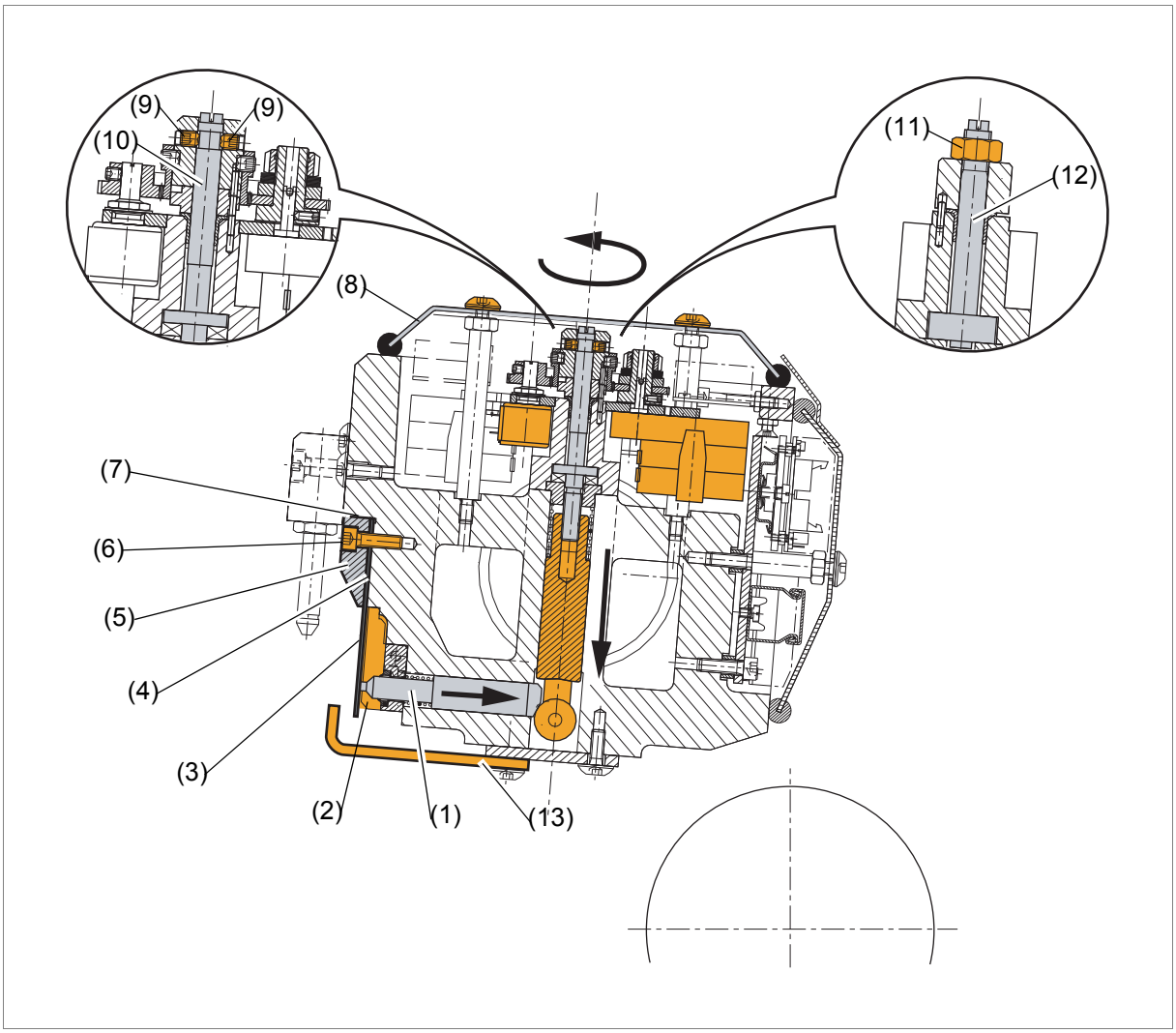

(1) Pin
(2) Gap
(3) Ink knife
(4) Mounting surface
(5) Clamping bar
(6) Retaining screw
(7) Mounting surface
(8) Cover
(9) Setscrew
(10) Adjustable ink key
(11) Locknut
(12) Fixed ink key
(13) Angle bracket

3.4 Replace pneumatic cylinder

Note

More information on this replacement work can be found in the following chapters:

- Chapt. 3.8 Replace pneumatic cylinder in Reg. 8 Pneumatic system in the *System* file
- Chapt. 4.1.3 Setting the magnetic field sensor

3.5 Replacing the magnetic field sensor

Note

More information on this replacement work can be found in the following chapters:

- Chapt. 3.7 Replace magnetic field sensors in Reg. 8 Pneumatic system in the *System* file
- Chapt. 4.1.3 Setting the magnetic field sensor

3.6 Replacing the ink separators

Note

Further information about this replacement work can be found in Chapt. 5.2 Insert ink separators in Reg. 4 operation.

3.7 Replacing components of the ink key control

Requirements

- Production group / function group at standstill
- Work on the electrical system may be performed only by specially trained **technicians**.
- Read Chapt. 8.9 Carrying out repairs in Reg. 2 Important for your safety in the *System* file.

Materials needed

- Allen key set
- Screwdriver no. 2
- Special grease: ASEOL Aquares EP 810-60
- Warning signs *Work is in progress!*
- WIFAG *electrical circuit diagram B*
- Reg. 3 Control elements
- Chapt. 2.3.3 Ink key controller device addressing
- Chapt. 2.1 Replacing electrical devices in general in Reg. 11 Electrical setting and commissioning instructions in the *System* file

⚠ WARNING	**Risk of injury!** **Risk of being trapped and crushed** by swiveling ink knife bar! => Keep hands at a safe distance from the ink knife bar. => Swivel ink knife bar only when no persons are in the danger zone.

⚠ WARNING	**Risk of injury!** **Risk of being trapped and crushed** by rotating rollers and cylinders! => De-allocate function group from the production group at the terminal and electrically disable (push the *SAFE-STOP* pushbutton). => Place *Work in progress!* warning signs on the corresponding terminals and control panels.

WARNING	**Risk of injury!** **Injury through cuts** from ink knives! => Observe the danger zone of the ink knife. => Touch ink knife only when wearing protective gloves.

Replacing component

1. On the terminal, change to the Ink level mask.
2. Switch off ink supply.
3. On the terminal, change to the Menu Printer \ Inking unit mask.
4. Swing away ink knife bar.
5. Electrically disable function group with the *SAFE-STOP* pushbutton.
6. Remove cover (1) (Fig. 23).
7. Replace component (Chapt. 2.1 Replacing electrical devices in general in Reg. 11 Electrical setting and commissioning instructions in the *System* file).
8. Clean mounting surfaces of the cover (1).
9. Coat mounting surfaces of the cover (1) with grease (ASEOL Aquares).
10. Fit and secure cover (1).
11. Electrically enable function group with the *SAFE-STOP* pushbutton.
12. Remove *Work is in progress!* warning sign.
13. On the terminal, change to the Ink level mask.
14. Switch on ink supply.
15. At the terminal, change to the mask Information.

Test the ink key control

16. Test the ink keys (Chapt. 4.3.1 Testing the ink key).

> The component is now replaced.

Fig. 23 Ink knife bar cover

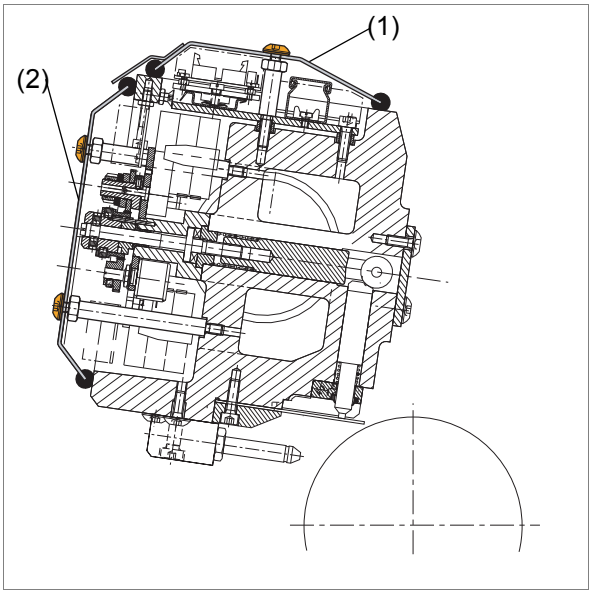

D47S_K006M

(1) Cover for ink key control
(2) Motor unit cover

Fig. 24 Ink key control

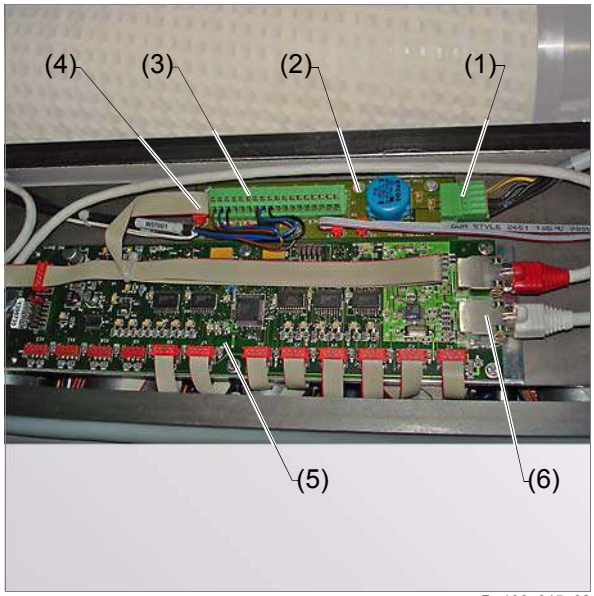

D_190_015_02

(1) FMB-AP power supply
(2) Ink knife bar connection print (FMB-AP)
(3) Connection for ink level sensors
(4) Power supply to E-FSR and level message of the ink level sensors
(5) Electronic ink key controller device (E-FSR)
(6) Ethernet connection

4 Basic settings

Contents

This chapter contains the following information:

- Chapt. 4.1 Setting
- Chapt. 4.2 Calibration
- Chapt. 4.3 Testing

Specification

For safety reasons only the adjustment work described in these operating instructions may be performed! All adjustment work not described herein must be performed by qualified WIFAG personnel.

4.1 Setting

4.1.1 Set the potentiometer

Requirements

- Production group / function group at standstill
- Covers removed (Chapt. 3.2 Replacing the motor unit)
- Ink knife correctly set (Chapt. 4.1.2 Set ink knives)
- Ink knife bar swung into position (Menu Printer \ Inking unit)

Materials needed

- Screwdrivers no. 3 and no. 4
- Reg. 3 Control elements

CAUTION	**Machine damage!** The to the **ink fountain roller** by ink knife! => Always adhere to setting values and procedures in Chapt. 4.1.2 Set ink knives. => Before each throwon of the ink knife bar make sure that no foreign objects are clamped.

1. Turn ink key (1) clockwise to mechanical stop (Fig. 25).
2. On the terminal, change to the Menu Tools \ Adjustable ink keys mask.
3. Select ink key.
4. Switch off power supply of the ink knife bar (48 VAC) according to *electrical circuit diagram B*.
5. Hold ink key (1) on the handle and turn potentiometer (3) until the optimal value (6) (Fig. 26) is shown on the terminal.
6. Switch on power supply of the ink knife bar (48 VAC) according to *electrical circuit diagram B*.
7. Calibrate ink keys.

> All the ink keys travel to the mechanical stop.

> Corresponding ink keys travel to the mechanical stop.

8. On the terminal, change to the Fault messages \ mask.
9. Check whether there are any malfunction messages.
10. On the terminal, change to the Information mask.

> The potentiometer is set.

Note

It is advisable to back up data after the setting. Only in this way is there a guarantee that the values can be restored after control devices are replaced. For further information about see Chapt. 3.1.7 WSE data backup in Reg. 11 Electrical setting and commissioning instructions in the *System* file.

Fig. 25 Motor unit

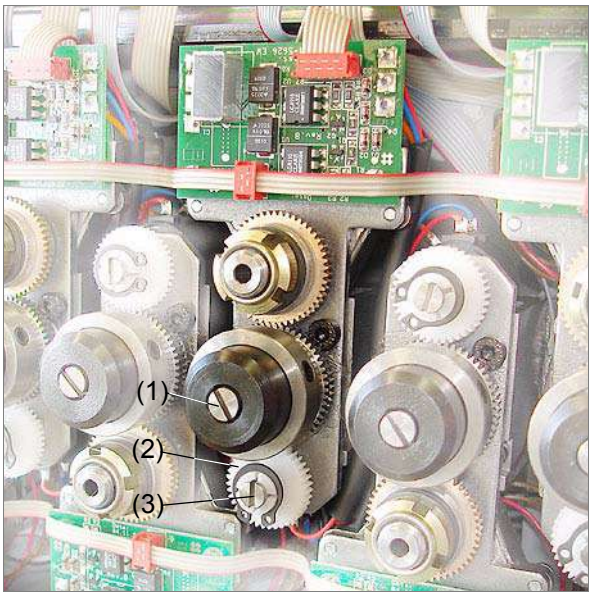

D_168_004_01

(1) Ink key
(2) Pinion
(3) Potentiometer

Fig. 26 Actual position zero setting

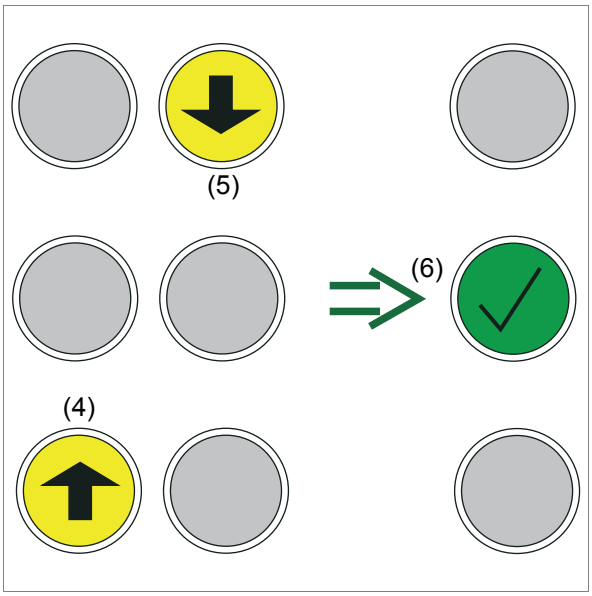

DXX_K001E_01

(4) Value too low
(5) Value too high
(6) Optimal value

4.1.2 Set ink knives

Requirements

- Production group / function group at standstill
- Stops of the ink knife bar throwon are clean
  (Chapt. 4.24 Clean stops of ink knife bar throwon in Reg. 6 Maintenance)
- Ink fountain roller is clean
  (Chapt. 4.12 Clean ink fountain roller, ink knife, ink separators in Reg. 6 Maintenance)
- All ink separators are removed
  (Chapt. 5.2 Insert ink separators in Reg. 4 operation)
- The ink knife tension is released over the entire length (only if previously replaced)

Materials needed

- Allen key set
- Screwdriver no. 4
- Diamond whetstone
- Special grease: e.g. Blasolube 540, BP Energrease LS3
- Special grease: Aseol Aquares EP 810-60
- Feeler gauge 0.1 mm
- Erichsen wheel
- Blue offset printing ink
- Flashlight
- Soft cloth
- Protective gloves
- WIFAG *electrical circuit diagram B*
- Reg. 3 Control elements

⚠ WARNING	**Risk of injury!** **Risk of being trapped and crushed** by rotating gearwheels and rotating ink fountain roller! => Observe danger zone. => Keep hands at a safe distance from gearwheels and ink fountain roller. => Turn operating mode switch to position *MAKEREADY* when performing makeready work.

WARNING	**Risk of injury!** **Risk of being trapped and crushed** by swiveling ink knife bar! => Keep hands at a safe distance from the ink knife bar. => Swivel ink knife bar only when no persons are in the danger zone.

WARNING	**Risk of injury!** **Injury through cuts** from ink knives! => Observe the danger zone of the ink knife. => Touch ink knife only when wearing protective gloves.

CAUTION	**Machine damage!** The to the **ink fountain roller** by ink knife! => Always adhere to setting values and procedures in Chapt. 4.1.2 Set ink knives. => Before each throwon of the ink knife bar make sure that no foreign objects are clamped.

Remove covers

1. On the terminal, change to the Ink level mask.
2. Switch off ink supply.
3. Unhook screen (1) and remove cover (2) (Fig. 28).
4. On the terminal, change to the Menu Printer \ Inking unit mask.
5. Swing on ink knife bar.
6. Remove all retaining screws (except for 2) on the cover (1) (Fig. 29).
7. Swing away ink knife bar.
8. Remove cover (1) (Fig. 30).

Preset ink knife

9. Swing on ink knife bar.
10. Switch off power supply of the ink knife bar (48 VAC) according to *electrical circuit diagram B*.
11. Use a voltmeter to check that no voltage is present.
12. Loosen setscrews (1) on the adjustable ink keys (2) max. 1/4 turn (Fig. 31).

If a handle (3) with the pinion slips from the ink key (2):

The position between the mechanical stop (4) and the potentiometer (5) is changed.

=> Re-set the potentiometer after the mechanical setting of the ink key (2) (Chapt. 4.1.1 Set the potentiometer).

13. Loosen nuts (6) on the fixed ink keys (7).
14. Set distance between ink knife (10) and ink fountain roller (11) with the ink keys (2) (7) to 0.1 mm.
15. Place flashlight behind ink knife (10) and ink fountain roller (11).
16. Visually check the parallelism of the ink knife lamellas to the ink fountain roller (11).

> 80% of the width of each ink knife lamella is parallel to the ink fountain roller (11).

If individual ink knife lamellas are at an angle to the ink fountain roller (11):

There is an irregular ink film when inking.

=> Swing away ink knife bar.

=> Chamfer the edge of the ink knife with a diamond whetstone to 0.05 mm – 0.1 mm × 45°, slightly round off, and thoroughly remove all shavings.

=> Swing on ink knife bar.

Measure ink film thickness

17. On the terminal, change to the Menu Test \ Ink fountain roller mask.
18. *SET SETPOINT TEST MODE* to 180 rev/min.
    > The ink fountain roller turns at 1.8 rev/min, this corresponds to an ink feed of 23 %.
19. Switch on *TEST MODE*.
20. Ink the ink fountain roller (1) with blue offset printing ink.
21. Press on Erichsen wheel (2) and let it turn 1 ½ revolutions.
22. Read the value on the scale on the side.

Fig. 27 Measure ink film thickness

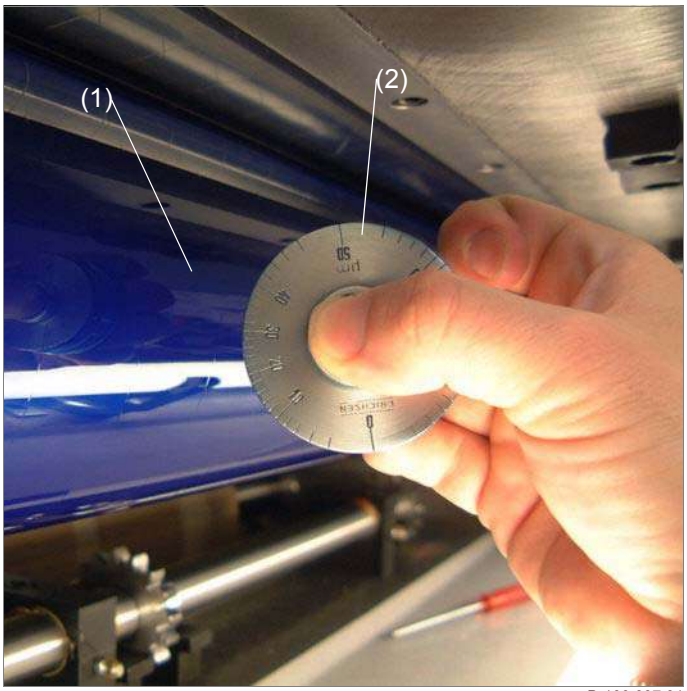

D 109,007 01

(1) Ink fountain roller
(2) Erichsen wheel

Set ink film thickness

23. Set the fixed ink keys (7) to produce an ink film of *0.015 mm – 0.030 mm* (target value = *0.015 mm*) (Fig. 31).
24. Set the adjustable zone screws (2) so that an ink film of *0.015 mm – 0.030 mm* is the result (target value = *0.020 mm*).

Note

With an ink fountain roller radical runout of *0.015 mm* an ink film of *0.015 - 0.045 mm* is permissible. The following are target values:

> Fixed zone screws (7)

at the narrowest point	*0.015 mm*
at the widest point	maximum *0.030 mm*

> Adjustable zone screws (2)

at the narrowest point	*0.020 mm*
at the widest point	maximum *0.035 mm*

Fix ink keys into place

25. Tighten locknuts (6) while holding the ink keys (7) (Fig. 31).
26. Turn handle (3) clockwise on mechanical stop.
    > The ink key contacts the mechanical stop (*min.* position).
27. Tighten setscrews (1) while holding the ink keys (2).
28. Use the screwdriver to turn ink keys (2) counterclockwise ½ revolution and then again clockwise on the mechanical stop.
29. Check the ink film thickness with the Erichsen wheel and readjust any deviating ink keys (2) (7).
30. Switch off *TEST MODE*.
31. Clean ink fountain roller and ink knife (Chapt. 4.12 Clean ink fountain roller, ink knife, ink separators in Reg. 6 Maintenance).
32. Fill gap (2) with grease (e.g. Blasolube 540, BP Energrease LS3).
33. Switch on power supply of the ink knife bar (48 VAC) according to *electrical circuit diagram B*.

Mount covers

34. Clean mounting surfaces of the cover (1) (Fig. 30).
35. Coat mounting surfaces of the cover (1) with grease (ASEOL Aquares).
36. Fit and secure cover (1).
37. Screw on cover (2) and hook on screens (1) (Fig. 28).
38. On the terminal, change to the Ink level mask.
39. Switch on ink supply.
40. On the terminal, change to the Information mask.
41. Turn operating mode switch to position *OPERATION*.

> This complete setting the ink knife.

Fig. 28 Remove screens and cover

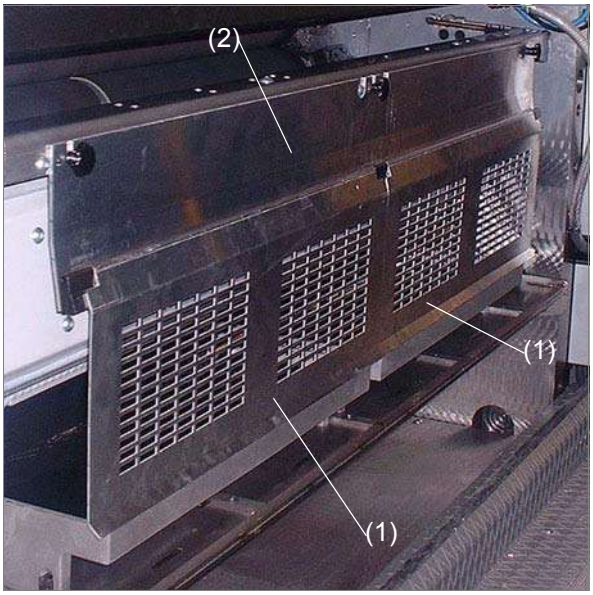

D_131_020_01

(1) Screen
(2) Cover

Fig. 29 Loosen screws, throwon position

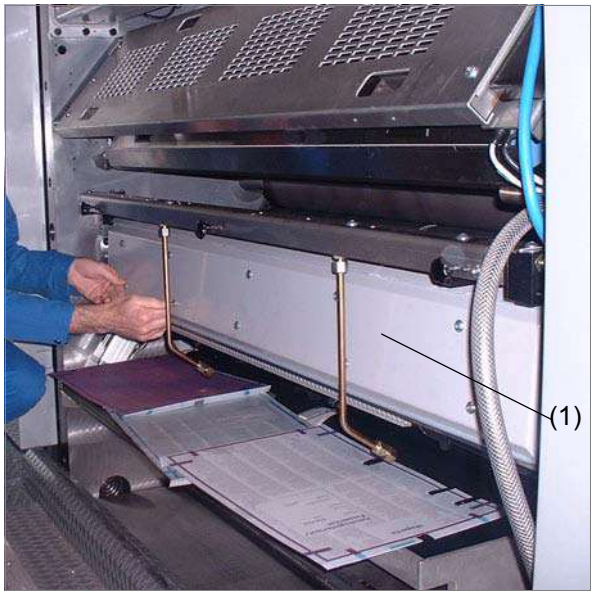

D_131_021_01

(1) Cover

Fig. 30 Remove cover, throwoff position

D_131_022_01

(1) Cover

Fig. 31 Set ink knife, throwon position

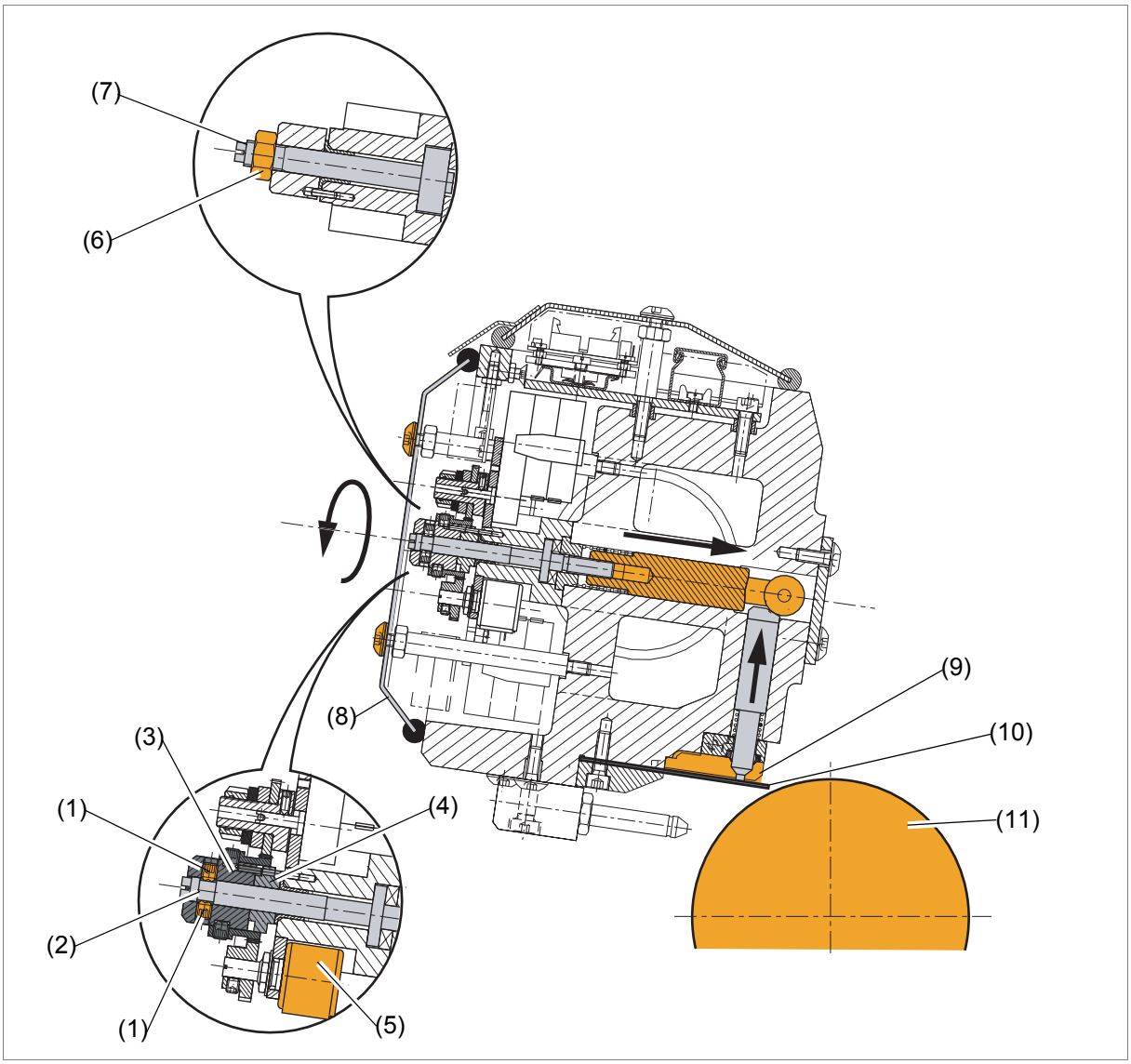

(1) Setscrew
(2) Adjustable ink key
(3) Handle
(4) Stop
(5) Potentiometer
(6) Locknut
(7) Fixed ink key
(8) Cover
(9) Gap
(10) Ink knife
(11) Ink fountain roller

4.1.3 Setting the magnetic field sensor

Note

The magnetic field sensor detects the piston position of the pneumatic cylinder: The switching point of the magnetic field sensor is mechanically fixed.

Requirements

- Work on the electrical system may be performed only by specially trained **technicians**.
- Production group / function group at standstill
- Stops of the ink knife bar throwon are clean
  (Chapt. 4.24 Clean stops of ink knife bar throwon in Reg. 6 Maintenance)

Materials needed

- *WIFAG Electrical circuit diagrams B*
- Allen key set
- Reg. 3 Control elements

⚠ WARNING	**Risk of injury!** **Risk of being trapped and crushed** by rotating gearwheels and rotating ink fountain roller! => Observe danger zone. => Keep hands at a safe distance from gearwheels and ink fountain roller. => Turn operating mode switch to position *MAKEREADY* when performing makeready work.

⚠ WARNING	**Risk of injury!** **Risk of being trapped and crushed** by swiveling ink knife bar! => Keep hands at a safe distance from the ink knife bar. => Swivel ink knife bar only when no persons are in the danger zone.

⚠ WARNING	**Risk of injury!** **Injury through cuts** from ink knives! => Observe the danger zone of the ink knife. => Touch ink knife only when wearing protective gloves.

CAUTION	**Machine damage!** The to the **ink fountain roller** by ink knife! => Always adhere to setting values and procedures in Chapt. 4.1.2 Set ink knives. => Before each throwon of the ink knife bar make sure that no foreign objects are clamped.

1. On the terminal, change to the Menu Printer \ Inking unit mask.
2. Swing on ink knife bar.

> The ink knife bar contacts the mechanical stop.

3. Check whether there is voltage.

> The LED on the magnetic field sensor (1) (Fig. 32) is lit green.

4. Loosen and remove retaining screws (6) (Fig. 33).
5. Unscrew the setscrew in the slide block (1) (Fig. 33) by one turn.
6. Slide magnetic field sensor (3) (Fig. 33) with slide block (1) in the groove until the LED lights up yellow.

> The position is now detected.

> The piston is located under the sensor.

7. Tighten setscrew in sliding block (1) (Fig. 33).
8. Insert and tighten retaining screws (6) (Fig. 33).

> LED still lights up yellow.

9. Check inputs on the WAGO I/O terminal according to *WIFAG electrical circuit diagrams B* .

> In working state (piston is under the sensor), the input signal on WAGO I/O = 1.

10. Swing away ink knife bar.

> The input signal on WAGO I/O changes state from 0 to 1 or vice versa.

11. On the terminal, change to the Fault messages \ mask.

> No fault message for the corresponding function is displayed.

12. On the terminal, change to the Information mask.
13. Turn operating mode switch to position *OPERATION*.

> The magnetic field sensor is electrically set and tested.

Fig. 32 Ink knife bar throwon

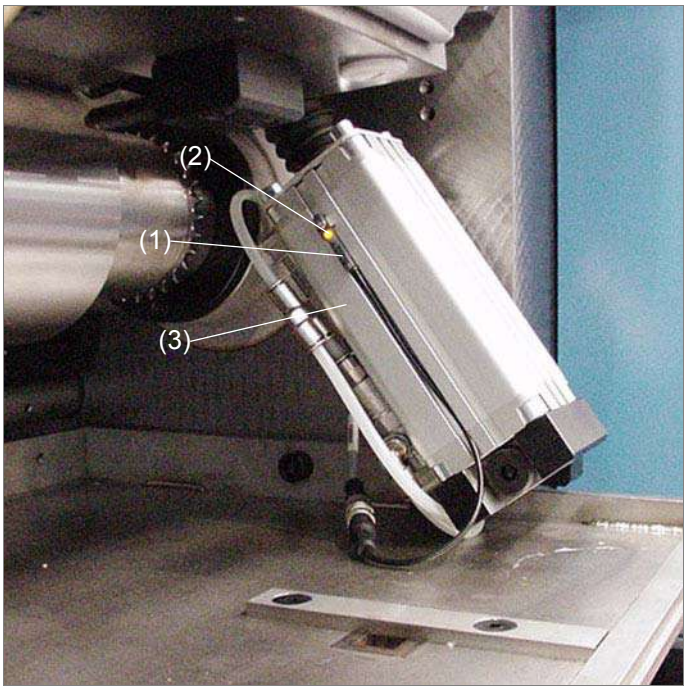

D_129_025_01

(1) Magnetic field sensor
(2) LED
(3) Pneumatic cylinder

Fig. 33 Mount sliding block and magnetic field sensor

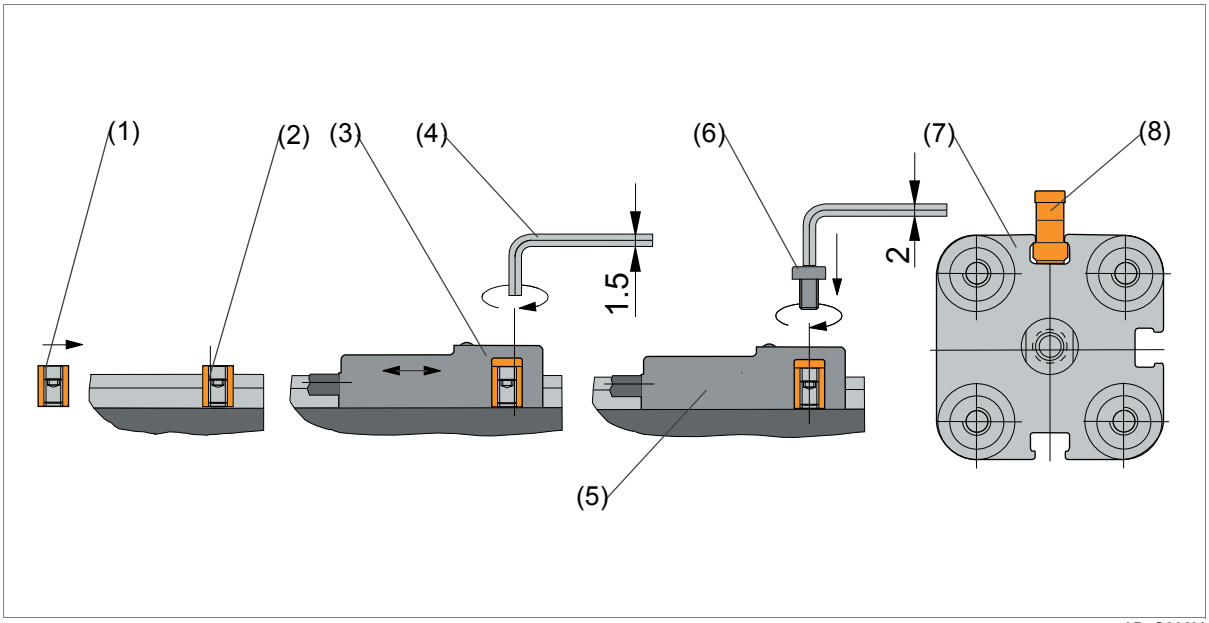

AP_G002M

(1) Sliding block
(2) Introduce sliding block front side in groove
(3) Place magnetic field sensor from above and position
(4) Fasten sliding block (Allen key 1.5 mm)
(5) Fasten magnetic field sensor (Allen key 2 mm)
(6) Retaining screw for magnetic field sensor
(7) Pneumatic cylinder
(8) Sliding block

4.2 Calibration

4.2.1 Calibrate ink keys

Requirements

- Production group / function group at standstill

Materials needed

- Reg. 3 Control elements

CAUTION	**Machine damage!** The to the **ink fountain roller** by ink knife! => Always adhere to setting values and procedures in Chapt. 4.1.2 Set ink knives. => Before each throwon of the ink knife bar make sure that no foreign objects are clamped.

1. On the terminal, change to the Menu Tools \ Adjustable ink keys mask.
2. Calibrate ink keys.

> All the ink keys travel to the mechanical stop.

> Corresponding ink keys travel to the mechanical stop.

3. On the terminal, change to the Information mask.

> Ink keys are calibrated.

Note

It is advisable to back up data after calibrating. Only in this way is there a guarantee that the values can be restored after control devices are replaced. For further information about see Chapt. 3.1.7 WSE data backup in Reg. 11 Electrical setting and commissioning instructions in the *System* file.

4.2.2 Calibrating the ink key

The control works with absolute position values. The user, however, is often accustomed to working with other “user scales”. The conversion of position values to user scales is done via calibration lines.
Calibration lines are determined by two coordinates. On the horizontal axis is the scale of effective position values; on the vertical axis are the position values of the user scale.

The position values of the user scale are determined by two defined values:

- Lower calibration point = `UepX`
- Middle calibration point = `MepX`

The effective position values for each position value of the user scale are determined as a calibration value for each ink key and saved for each ink key individually. The calibration values of the corresponding ink knife bar (all the ink keys) can be deleted in the terminal mask Menu Tools \ Ink key calibration values . The default values can then be retrieved.

Procedure:

1. The printer defines the machine speed and the percent value of the calibration point. The percent values are normally 20% and 50%.
2. To determine the `MepX` , the printer performs a test production with an ink key setting of 50%. It sets the ink keys individually to an even ink density across the entire ink knife bar.
3. If the printer is satisfied with the settings of the ink keys, the mean calibration values are accepted. The values are accepted using a command at the control console. Further information can be found in the *documentation supplied by the control console manufacturer*.
4. To determine the `UepX` , the printer performs a test production with an ink key setting of 20%. The same procedure is used as for determining the `OepX`.

> The ink keys are now calibrated.

Note

It is advisable to back up the data after calibration. Only in this way is there a guarantee that the values can be restored after control devices are replaced. For further information about see Chapt. 3.1.7 WSE data backup in Reg. 11 Electrical setting and commissioning instructions in the *System* file.

4.3 Testing

4.3.1 Testing the ink key

Requirements

- Production group / function group at standstill

Materials needed

- Reg. 3 Control elements

CAUTION	**Machine damage!** The to the **ink fountain roller** by ink knife! => Always adhere to setting values and procedures in Chapt. 4.1.2 Set ink knives. => Before each throwon of the ink knife bar make sure that no foreign objects are clamped.

1. On the terminal, change to the Menu Tools \ Adjustable ink keys mask.
2. Select ink key.

Note

If no specific ink key is selected [0] all the ink keys of the ink knife bar are moved.

3. Enter *SETPOINT TEST RUN MODE*.

> The ink key travels to the setpoint entered.
> Setpoint and actual value are identical.
> The actual value indicates the optimum value (6) (Fig. 35).
> The malfunction indicator is green.

4. On the terminal, change to the Information mask.

> The ink key is now tested.

Fig. 34 Motor unit

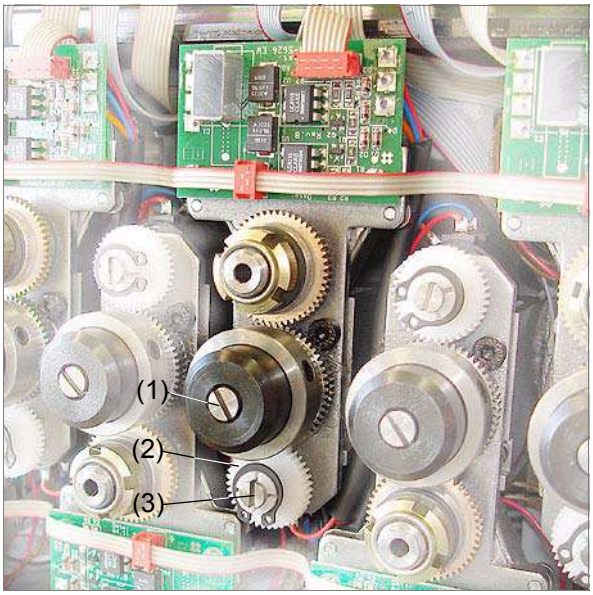

D_168_004_01

(1) Ink key
(2) Pinion
(3) Potentiometer

Fig. 35 Actual position zero setting

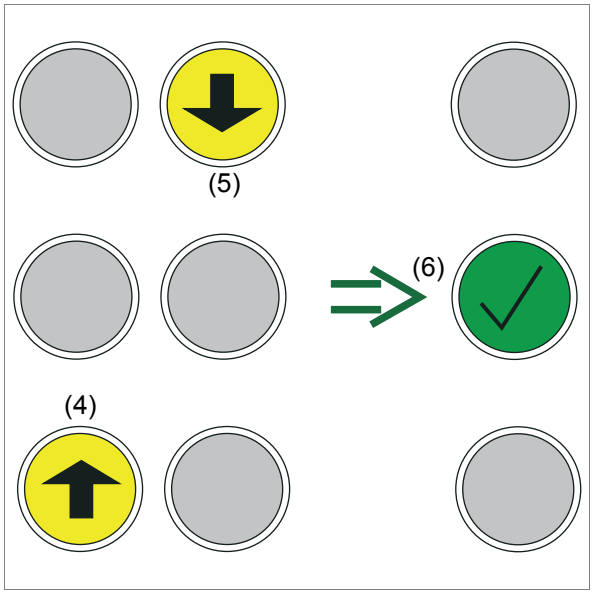

DXX_K001E_01

(4) Value too low
(5) Value too high
(6) Optimal value

12 Dampening unit

1 Overview **12.3**

2 Construction and function **12.4**
2.1 Dampener unit **12.4**
2.2 Dampening solution **12.4**
2.3 Spray dampening system **12.5**
2.4 Spray dampening system control **12.5**
2.5 Dampening solution supply **12.6**

3 Replace components **12.8**
3.1 WIFAG article numbers **12.8**
3.2 Replacing the spray dampening system **12.9**
3.3 Replacing the spray dampening system control **12.12**
3.4 Replace components of the spray dampening system **12.14**

4 Basic settings **12.16**
4.1 Setting **12.17**
4.1.1 Set operating pressure 12.17
4.1.2 Set spray dampening system position 12.19
4.2 Calibration **12.21**
4.3 Testing **12.21**
4.3.1 Testing the spray dampening system 12.21

1 Overview

Fig. 1 Overview of dampening unit, view from side I

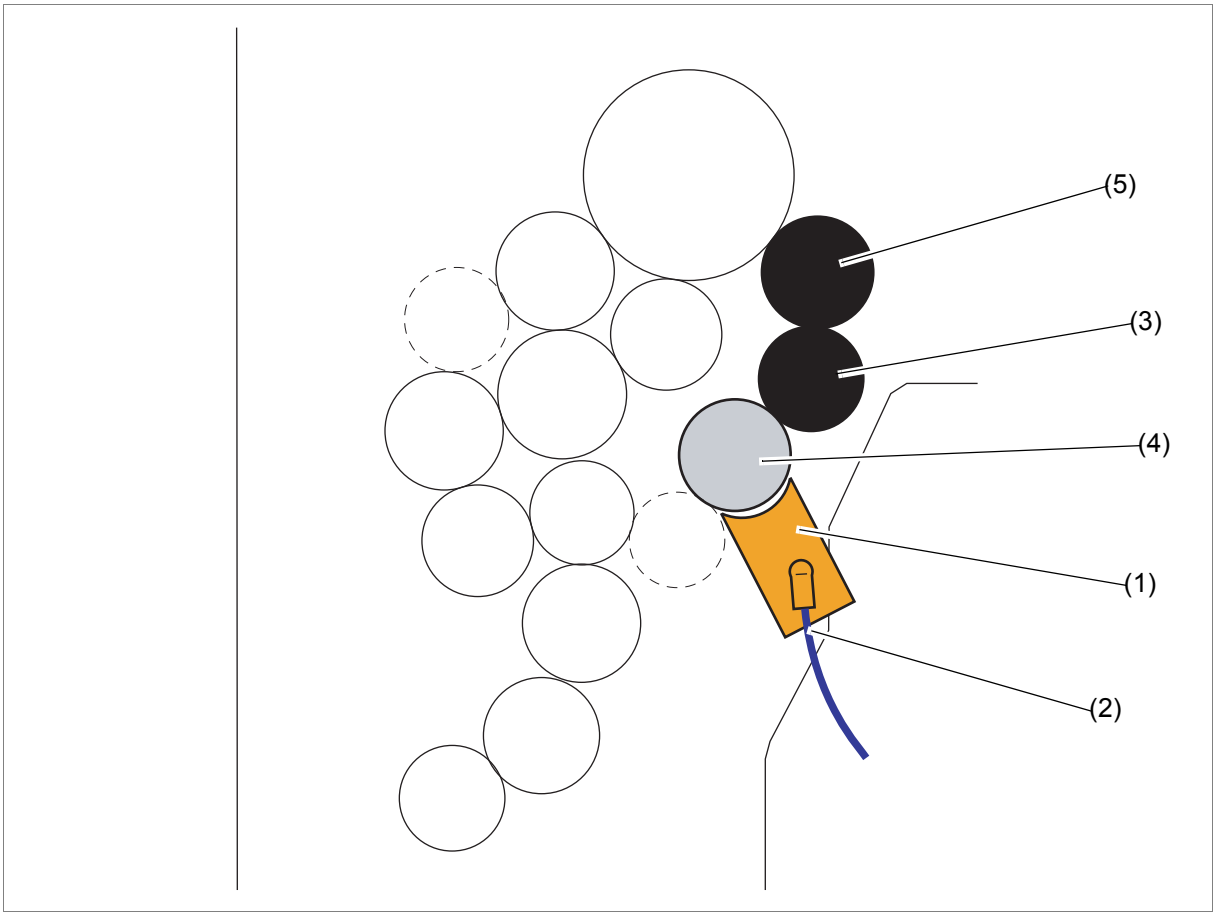

(1) Spray dampening system (Chapt. 2.3 Spray dampening system, Chapt. 2.4 Spray dampening system control)
(2) Dampening solution supply (Chapt. 2.5 Dampening solution supply)
(3) Dampener transfer roller (Reg. 15 Rubber rollers)
(4) Water oscillator drum (Reg. 14 Oscillating drum and reciprocator drive)
(5) Dampening form roller (Reg. 15 Rubber rollers)

2 Construction and function

Contents

This chapter contains the following information:

- Chapt. 2.1 Dampener unit
- Chapt. 2.2 Dampening solution
- Chapt. 2.3 Spray dampening system
- Chapt. 2.4 Spray dampening system control
- Chapt. 2.5 Dampening solution supply

2.1 Dampener unit

Note

Information about the spray dampening system can be found in the manufacturer's documentation in the *Supplier's documentation* file.

2.2 Dampening solution

Mains water is subject to quality fluctuations depending on origin and time of year. For this reason, take the following measures:

- Check dampening solution regularly
- Obtain a water analysis from the water supply company at least once per quarter.
- Do not use totally demineralized water
- Discuss any water treatment measures with the supplier of dampening solution additives

Reference values for dampening agent content

- Halogen ions, especially chloride ≤ 25 mg/l
- Nitrate / nitride ≤ 25 mg/l
- Sulfate ≤ 50 mg/l

Reference values for water hardness

- 1.4 - 2.1 mmol/l

Sulfates frequently represent the main component of non-carbonate hardness in water.
Chlorides promote the corrosion of concrete, iron and aluminum.

Reference values for water temperature

- ≤ 20 °C

2.3 Spray dampening system

Note

Information about the spray dampening system can be found in the manufacturer's documentation in the *Supplier's documentation* file.

2.4 Spray dampening system control

The spray dampening system control is installed in the bridge boxes (+BK BU / +BK BO) (Chapt. 1 Overview in Reg. 7 Electrical and control systems).

Note

Information on the spray dampening system control can be found in the following documents:

- Chapt. 2.2.2 CANOpen bus in Reg. 7 Electrical and control systems
- Chapt. 2.3.1 Control system for spray dampening system in Reg. 7 Electrical and control systems
- Documentation of the manufacturer in the *Suppliers' documentation* file

2.5 Dampening solution supply

Note

Information about the dampening solution device can be found in the manufacturer's documentation in the *Supplier's documentation* file.

Fig. 2 Diagram of dampening solution supply

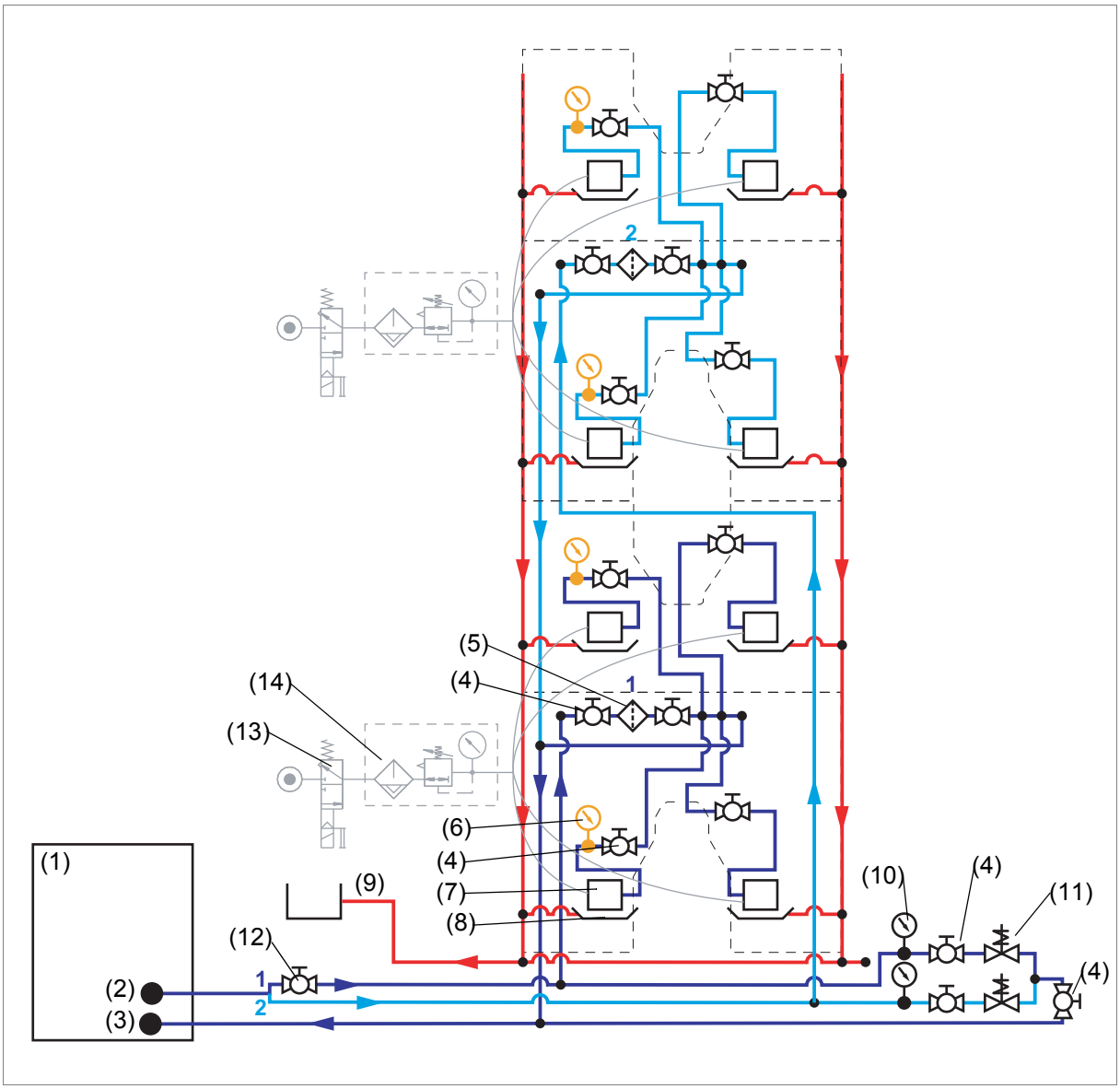

Fig. 2 Diagram of dampening solution supply

(1) Dampening solution unit (supplier's documentation)
(2) Feed line (to spray dampening system)
(3) Circulation line (for dampening solution device)
(4) Stop-cock
(5) Filter
(6) Mobile pressure gauge (setting on pressure retaining valve (11) 3.5 ± 0.2 bar)
(7) Spray dampening system
(8) Collector tank
(9) Return line (from collector tank to disposal)
(10) Pressure gauge
(11) Pressure retaining valve
(12) Metering cock (fully open)
(13) Pneumatic valve
(14) Filter-regulator-lubricator unit (setting 1.5 bar)

Fig. 3 Supply unit, side I

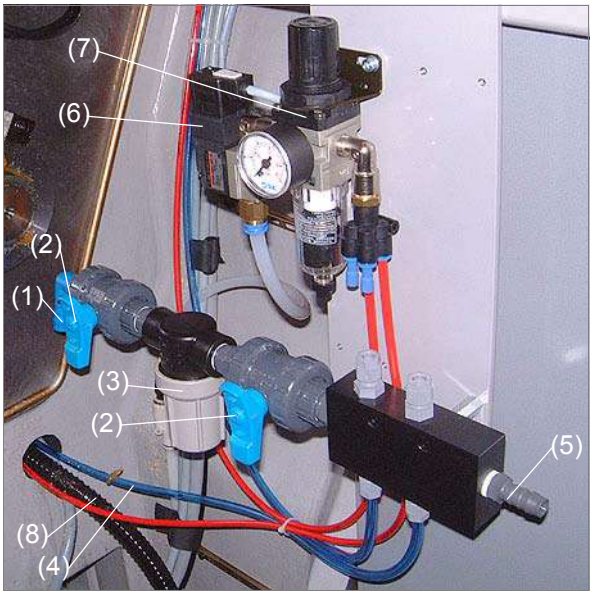

D_165_003_01

(1) Feed line (from dampening solution device)
(2) Stop-cock
(3) Filter
(4) Feed line (to spray dampening system)
(5) Circulation line (for dampening solution device)
(6) Pneumatic valve
(7) Filter-regulator-lubricator unit (setting 1.5 bar)
(8) Reverse line

Fig. 4 Spray dampening system connections, side I

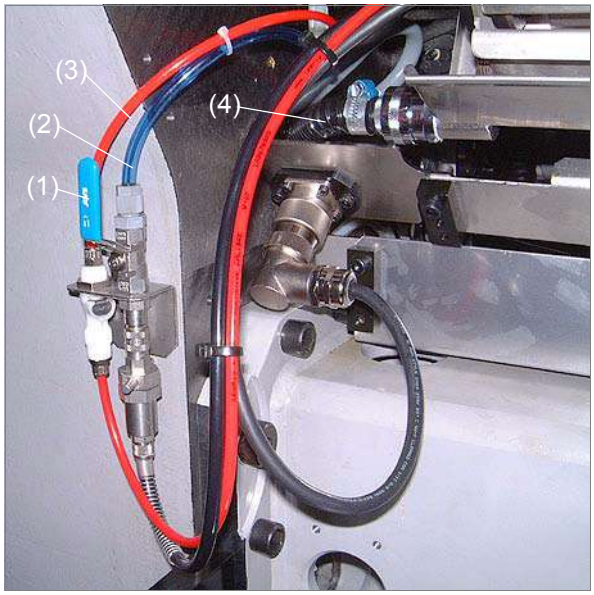

D_165_004_01

(1) Stop-cock
(2) Feed line
(3) Compressed-air line
(4) Reverse line

3 Replace components

Contents

This chapter contains the following information:

- Chapt. 3.1 WIFAG article numbers
- Chapt. 3.2 Replacing the spray dampening system
- Chapt. 3.3 Replacing the spray dampening system control
- Chapt. 3.4 Replace components of the spray dampening system

Specification

For safety reasons only the replacement work described in these operating instructions may be performed! All replacement work not described herein must be performed by qualified WIFAG personnel.

3.1 WIFAG article numbers

Tab. 1 Overview of components and accessories

Article	Obtainable only from WIFAG	Can be ordered from WIFAG
Spray dampening system	1424026 1424024	----------
Spray dampening system control	1365876	----------
Testing bench complete (option)	1427391	----------
Device for cleaning nozzles (optional)	A4-12798RO	----------
Filter insert for supply unit	A57181	----------
Wrench set	9003382	----------
Solenoid valve, complete	112975	----------
Coil for solenoid valve	114160	----------
Spray nozzle	112976	----------
Lockup nut	112977	----------
O-ring set	???????	----------
Inline filter	A4-12795RO	----------
Valve rail	1427389	----------
Mobile pressure gauge	1369296	----------

3.2 Replacing the spray dampening system

Note

On side I, the spray dampening systems are labelled with the exact installation. The spray dampening systems position is set in the corresponding printing couple. If a spray dampening system is installed in another printing couple, the position of the spray dampening system must be checked after installation, and if necessary, reset.

Requirements

- Production group / function group at standstill
- Read Chapt. 4.4 Working in the tunnel / mobile terminal in Reg. 2 Important for your safety.

Materials needed

- Allen key set
- Torque wrench with 0.24 in Allen socket
- Warning sign *Work is in progress!*
- Reg. 3 Control elements

⚠ WARNING	**Risk of injury!** **Risk of being trapped and crushed** by rotating rollers and cylinders! => Turn operating mode switch to position *MAKEREADY*. => Turn printing couple only with the command *PLACE PLATES* or *LIFT OUT PLATES*. => Inch printing couple *FORWARD* or *BACK* only when nobody is in the danger zone. => Turn printing couple only when the corresponding spray dampening system is built in.

⚠ WARNING	**Risk of injury!** **Damage to eyes** due to dampening solution escaping at high pressure (4-6 bar)! => Close stop-cock between spray dampening system and feed line. => Switch off concerned spray dampening system on the terminal. => Wear protective goggles and protective gloves. => Observe the safety datasheets of the dampening solution manufacturer.

WARNING	**Risk of injury!** **Environmental pollution** due to improperly disposed of dampening solution! => Comply with the local statutory regulations.

Remove complete spray dampening system

1. Close stop-cock (2) (Fig. 5).
2. Switch off concerned spray dampening system on the terminal.
3. Remove plug (3) from the socket.
4. Pull off feed line (1).
5. Loosen retaining screws (1) and turn bearing cover upward (2) (Fig. 6).
6. Lift out spray dampening system.

Install complete spray dampening system

7. Set position (Chapt. 4.1.2 Set spray dampening system position).
8. Insert spray dampening system in the bearing shell (3) (Fig. 6).
9. Tighten retaining screws (1) with a tightening torque of 12.5 Nm.
10. Connect feed line (1) (Fig. 5).
11. Connect plug (3).
12. Open stop-cock (2).
13. Switch on concerned spray dampening system on the terminal.
14. Turn operating mode switch to position *OPERATION*.
15. Remove *Work is in progress!* warning sign.

> The spray dampening system is replaced.

Fig. 5 Spray dampening system connections, side I

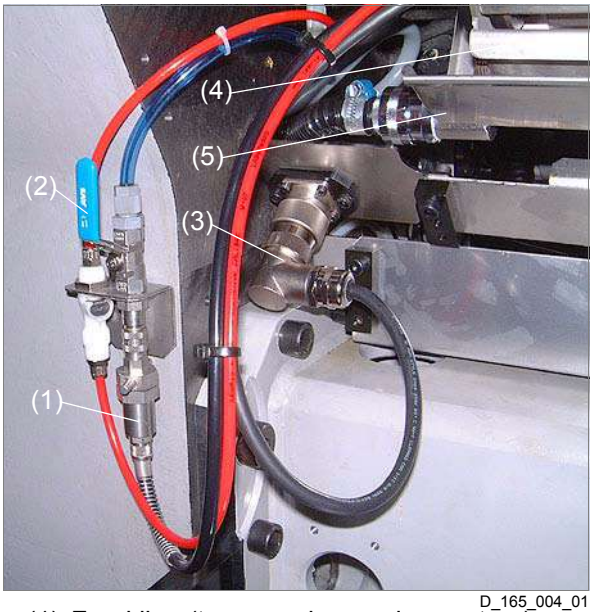

D_165_004_01

(1) Feed line (to spray dampening system)
(2) Stop-cock
(3) Plug (electrical power supply)
(4) Spray dampening system
(5) Collector tank

Fig. 6 Spray dampening system support

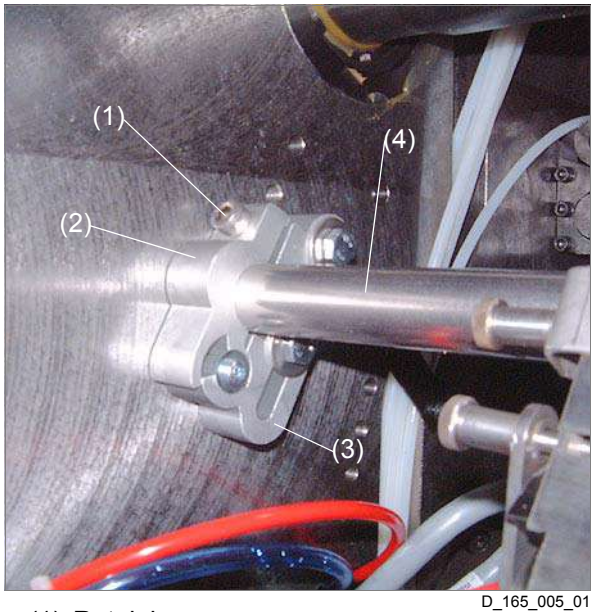

D_165_005_01

(1) Retaining screw
(2) Bearing cover
(3) Bearing shell
(4) Spray dampening system chuck

3.3 Replacing the spray dampening system control

Requirements

- Production group / function group at standstill
- Work on the electrical system may be performed only by specially trained **technicians**.
- Read Chapt. 8.9 Carrying out repairs in Reg. 2 Important for your safety in the *System* file.

Materials needed

- Warning signs *Work is in progress!*
- Reg. 3 Control elements
- Chapt. 2.3.1 Control system for spray dampening system in Reg. 7 Electrical and control systems
- Chapt. 2.1 Replacing electrical devices in general in Reg. 11 Electrical setting and commissioning instructions in the *System* file

⚠ WARNING	**Risk of injury!** **Damage to eyes** due to dampening solution escaping at high pressure (4-6 bar)! => Close stop-cock between spray dampening system and feed line. => Switch off concerned spray dampening system on the terminal. => Wear protective goggles and protective gloves. => Observe the safety datasheets of the dampening solution manufacturer.

Replacing the spray dampening system control

1. Close stop-cock between spray dampening system and feed line.
2. On the terminal, change to the Menu Printer \ Offset sequences \ Manual mask.
3. Switch off spray dampening system.
4. Replace spray dampening system control (Chapt. 2.1 Replacing electrical devices in general in Reg. 11 Electrical setting and commissioning instructions in the *System* file).
5. Open stop-cock between spray dampening system and feed line.
6. Switch on spray dampening system.
7. On the terminal, change to the Information mask.
8. Remove *Work is in progress!* warning sign.

Testing the spray dampening system

9. Test spray dampening system (Chapt. 4.3.1 Testing the spray dampening system).

> The spray dampening system control is now replaced

3.4 Replace components of the spray dampening system

Requirements

- Production group / function group at standstill
- Work on the electrical system may be performed only by specially trained **technicians**.
- Read Chapt. 8.9 Carrying out repairs in Reg. 2 Important for your safety in the *System* file.
- Read Chapt. 4.4 Working in the tunnel / mobile terminal in Reg. 2 Important for your safety.

Materials needed

- Documentation of the manufacturer in the *Suppliers' documentation* file
- Warning sign *Work is in progress!*
- Reg. 3 Control elements

⚠ WARNING	**Risk of injury!** **Risk of being trapped and crushed** by rotating rollers and cylinders! => Turn operating mode switch to position *MAKEREADY*. => Turn printing couple only with the command *PLACE PLATES* or *LIFT OUT PLATES*. => Inch printing couple *FORWARD* or *BACK* only when nobody is in the danger zone. => Turn printing couple only when the corresponding spray dampening system is built in.

⚠ WARNING	**Risk of injury!** **Damage to eyes** due to dampening solution escaping at high pressure (4-6 bar)! => Close stop-cock between spray dampening system and feed line. => Switch off concerned spray dampening system on the terminal. => Wear protective goggles and protective gloves. => Observe the safety datasheets of the dampening solution manufacturer.

WARNING	
	Risk of injury! **Environmental pollution** due to improperly disposed of dampening solution! => Comply with the local statutory regulations.

1. Close stop-cock between spray dampening system and feed line.
2. On the terminal, change to the Menu Printer \ Offset sequences \ Manual mask.
3. Switch off spray dampening system.
4. Carry out replacement work in accordance with the manufacturer's documentation.
5. Open stop-cock between spray dampening system and feed line.
6. Switch on spray dampening system.
7. On the terminal, change to the Information mask.
8. Turn operating mode switch to position *OPERATION*.
9. Remove *Work is in progress!* warning sign.

4 Basic settings

Contents

This chapter contains the following information:

- Chapt. 4.1 Setting
- Chapt. 4.2 Calibration
- Chapt. 4.3 Testing

Specification

For safety reasons only the adjustment work described in these operating instructions may be performed! All adjustment work not described herein must be performed by qualified WIFAG personnel.

4.1 Setting

4.1.1 Set operating pressure

Requirements

- Production group / function group at standstill

Materials needed

- Documentation of the dampening solution device in the *Supplier's documentation* file
- Screwdriver no. 4
- Mobile pressure gauge

⚠ CAUTION	**Production malfunction!** Negative **print quality** due to insufficient or excess dampening solution feed. => Set operating pressure for the dampening solution feed only when the production group is at standstill. => Do not deviate from the predefined operating pressure of 3.5 ± 0.2 bar.

1. Set pressure on the dampening solution unit in accordance with the manufacturer's documentation.
2. Fully open metering cock (12).
3. Set pressure at pressure retaining valves (11) and check with mobile pressure gauge (6) at the spray dampening systems (Fig. 7).
   - Check at the printing tower that is the furthest from the dampening solution device.
   - Check at one spray dampening device per bridge.
   - The pressure should be 3.5 ± 0.2 bar at each spray dampening device.

Fig. 7 Diagram of dampening solution supply

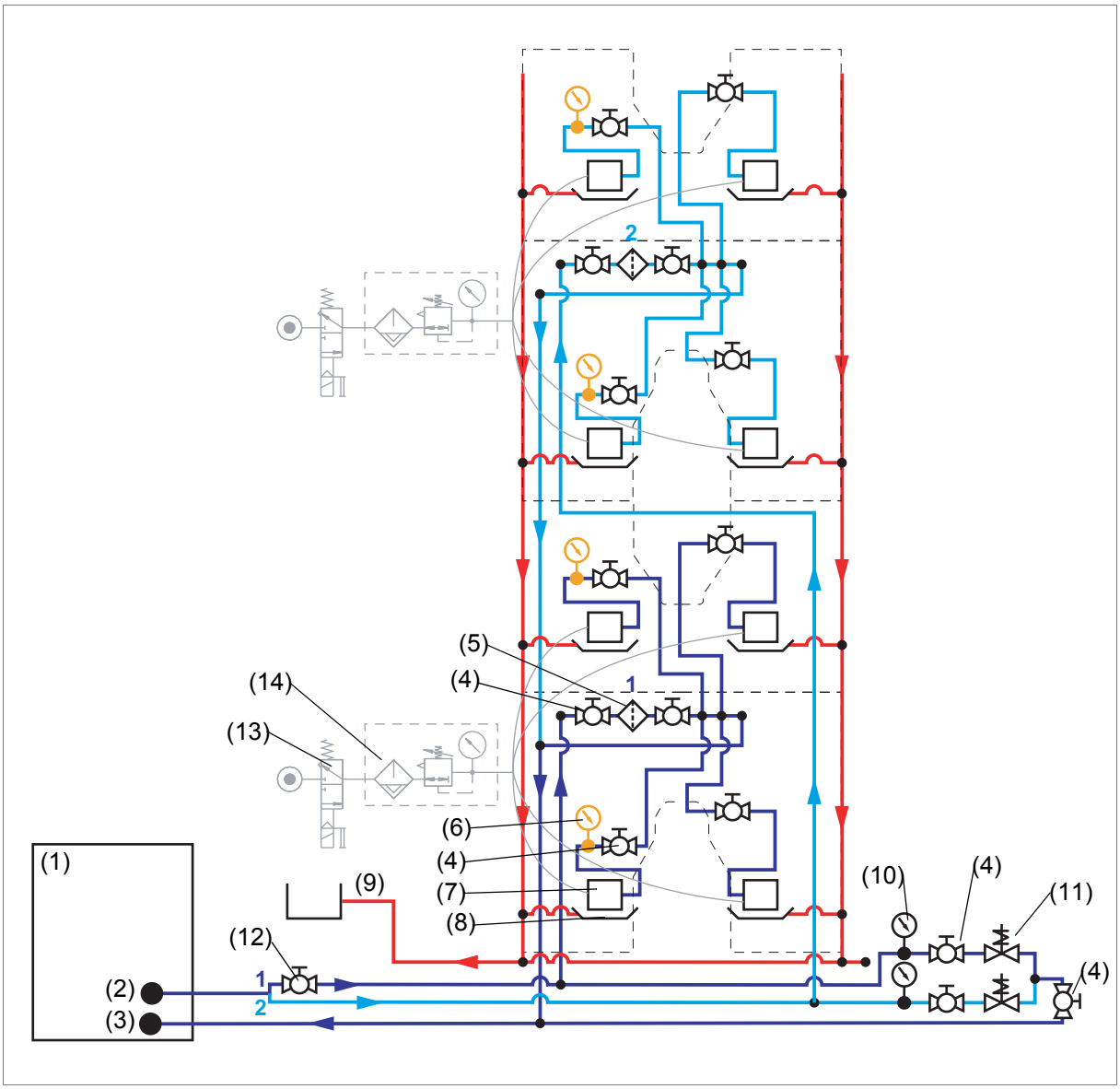

(1) Dampening solution unit (supplier's documentation)
(2) Feed line (to spray dampening system)
(3) Circulation line (for dampening solution device)
(4) Stop-cock
(5) Filter
(6) Mobile pressure gauge (setting on pressure retaining valve (11) 3.5 ± 0.2 bar)
(7) Spray dampening system
(8) Collector tank
(9) Return line (from collector tank to disposal)
(10) Pressure gauge
(11) Pressure retaining valve
(12) Metering cock (fully open)
(13) Pneumatic valve
(14) Filter-regulator-lubricator unit (setting 1.5 bar)

4.1.2 Set spray dampening system position

Requirements

- Production group / function group at standstill
- Read Chapt. 4.4 Working in the tunnel / mobile terminal in Reg. 2 Important for your safety.

Materials needed

- Allen key set
- Leaf gauge 2 mm or rubber blanket strips
- Leaf gauge 1 mm
- Fork wrench size 0.31 in
- Reg. 3 Control elements

WARNING	**Risk of injury!** **Risk of being trapped and crushed** by rotating rollers and cylinders! => Turn operating mode switch to position *MAKEREADY*. => Turn printing couple only with the command *PLACE PLATES* or *LIFT OUT PLATES*. => Inch printing couple *FORWARD* or *BACK* only when nobody is in the danger zone. => Turn printing couple only when the corresponding spray dampening system is built in.

WARNING	**Risk of injury!** **Damage to eyes** due to dampening solution escaping at high pressure (4-6 bar)! => Close stop-cock between spray dampening system and feed line. => Switch off concerned spray dampening system on the terminal. => Wear protective goggles and protective gloves. => Observe the safety datasheets of the dampening solution manufacturer.

1. Loosen retaining screws (1) and pull holder all the way to the rear (Fig. 8).
2. Lightly tighten retaining screws (1).

> The support systems can be moved by hand.

3. Slide spray dampening system (2) to the water oscillating drum (5) or rubber roller (5) and set the distance of the termination bars.

> The distance of the lateral termination bars is 2.0 ± 1.0 mm.

> The distance of the upper and lower termination bars is > 1.0 mm.

4. Tighten retaining screws (1).
5. Open stop-cock between spray dampening system and feed line.
6. Switch on concerned spray dampening system on the terminal.
7. Turn operating mode switch to position *OPERATION*.
8. Remove *Work is in progress!* warning sign.

> The spray dampening system position is set.

Fig. 8 Set spray dampening system position

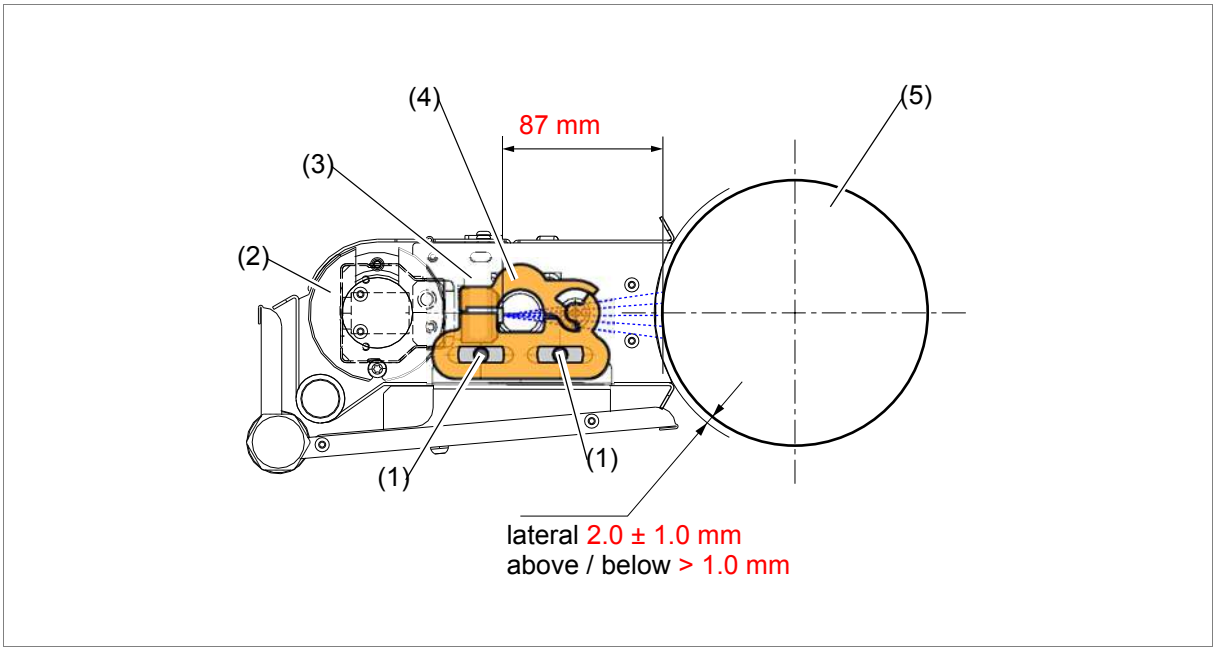

D47e_L003M_03

(1) Retaining screw
(2) Spray dampening system
(3) Retaining screw
(4) Bearing cover
(5) Water oscillator drum or rubber roller

4.2 Calibration

Note

No calibrations are necessary on this sub-function group.

4.3 Testing

4.3.1 Testing the spray dampening system

Requirements

- Production group / function group at standstill

Materials needed

- Reg. 3 Control elements

CAUTION	**Machine damage!** **Flooding** due to entry of an excessively high setpoint! => Determine setpoint in small steps. => Observe dampening unit.

1. On the terminal, change to the Menu Test \ Dampening unit mask.
2. Enter *SETPOINT TEST RUN MODE*.
3. Switch on *TEST MODE*.

> All the nozzles of the spray dampening system spray with the prespecified set-point.

4. Switch off *TEST MODE*.
5. On the terminal, change to the Information mask.

> The spray dampening system is now tested.

13 Printing couple drive

1 Overview **13.3**

2 Construction and function **13.4**
2.1 Printing couple drive **13.5**
2.2 Cooling **13.7**
2.3 Manual drive **13.8**
2.4 Drive control **13.9**
2.4.1 Concept 13.9
2.4.2 Synchronization 13.10

3 Replace components **13.11**
3.1 WIFAG article numbers **13.11**
3.2 Replacing the printing couple drive **13.12**
3.3 Replacing the timing belt **13.17**
3.4 Replace resolver **13.18**
3.5 Replace drive controller **13.20**

4 Basic settings **13.21**
4.1 Setting **13.21**
4.1.1 Set timing belt tension 13.21
4.2 Calibration **13.22**
4.2.1 Reference printing couple drive 13.22
4.2.2 Calibrate printing couple drive 13.23
4.3 Testing **13.26**
4.3.1 Test drives 13.26

1 Overview

Fig. 1 Overview of printing couple drive, view from side II

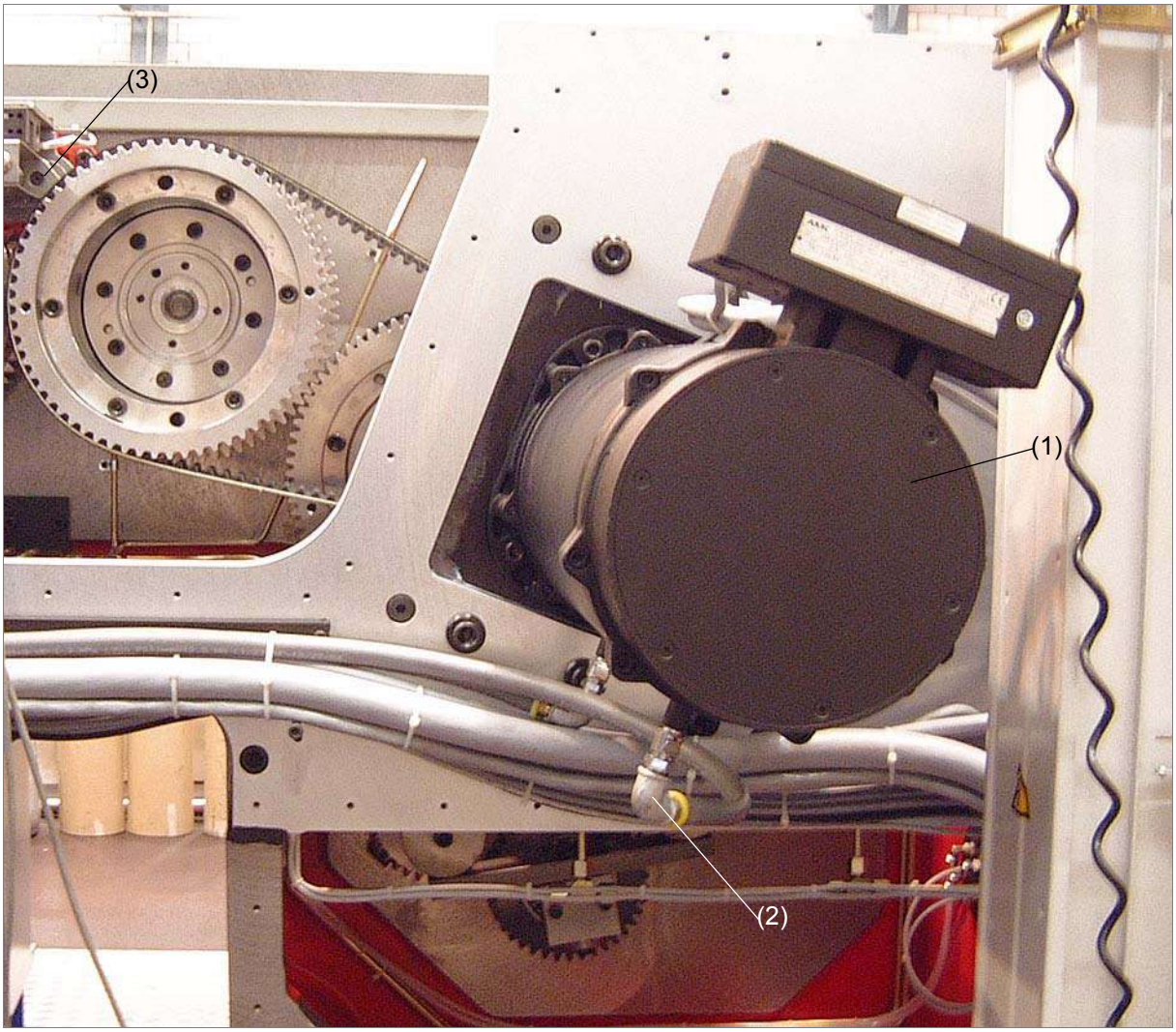

D_149_009_01

(1) Printing couple drive (Chapt. 2.1 Printing couple drive, Chapt. 2.4 Drive control)
(2) Cooling water line (Chapt. 2.2 Cooling)
(3) Manual drive (Chapt. 2.3 Manual drive)

2 Construction and function

Contents

This chapter contains the following information:

- Chapt. 2.1 Printing couple drive
- Chapt. 2.2 Cooling
- Chapt. 2.3 Manual drive
- Chapt. 2.4 Drive control

2.1 Printing couple drive

The printing couple drive drives the following sub-function-groups (Fig. 2):

- Blanket cylinder (1)
- Plate cylinder (2)
- Oscillator drum (3)
- Reciprocator drive (4)

The blanket cylinder (1) is driven via the timing belt (2) by the printing couple drive (3) (Fig. 3).

The plate cylinder (2), the oscillator drum (3), and the reciprocator drive (4) are driven by a gear train from the blanket cylinder (1) (Fig. 2).

Note

More information on the oscillating drum, reciprocator drive and inking unit club can be found in Reg. 14 Oscillating drum and reciprocator drive.

Information on the ink fountain roller drive can be found in Reg. 10 Ink fountain roller and ink pickup roller.

Fig. 2 Gearing, side II

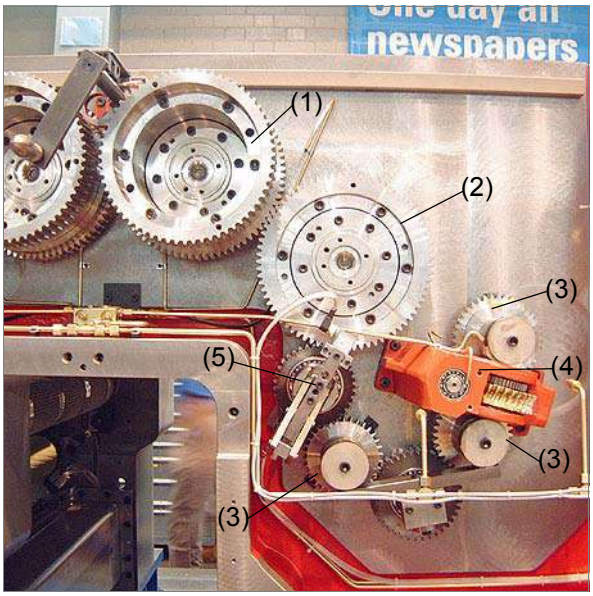

D_149_008_01

(1) Blanket cylinder gearwheel
(2) Plate cylinder gearwheel
(3) Oscillator drum gearwheel
(4) Reciprocator drive
(5) inking unit coupling

Fig. 3 Printing couple drive, side II

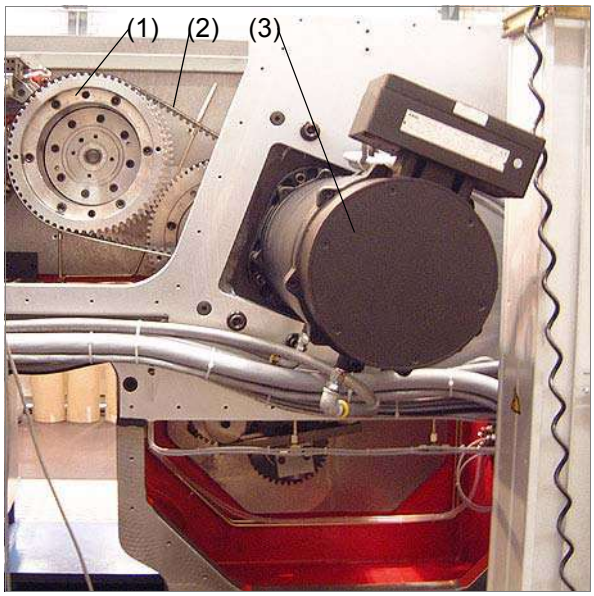

D_149_009_02

(1) Blanket cylinder gearwheel
(2) Timing belt
(3) Printing couple drive

The timing belt tension can be set with the tensioning device (Fig. 4); (Chapt. 4.21 Setting timing belt tensions in Reg. 6 Maintenance).

A resolver (1) is integrated on side I on the blanket cylinder (Fig. 5). The resolvers (1) read the angular position on the cylinders and pass the values to the drive control (Chapt. 2.4 Drive control).

Fig. 4 Tensioning device for timing belt, side II

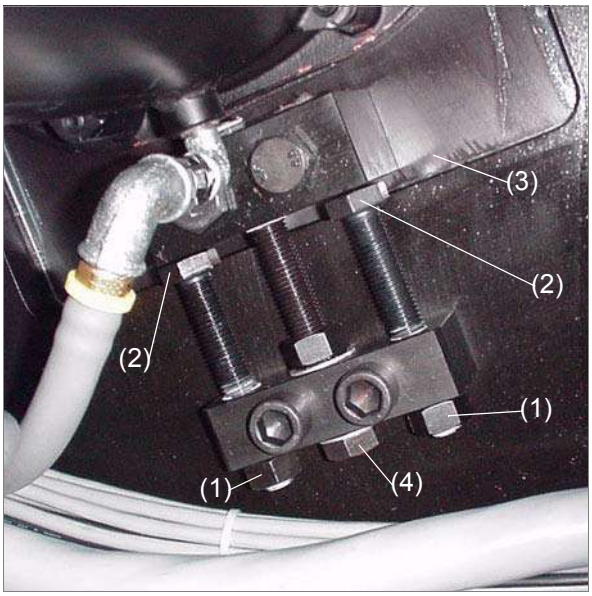

D_129_073_01

(1) Locknut
(2) Adjusting screw
(3) Guide plate
(4) Adjusting screw

Fig. 5 Resolver for printing couple drive, side I

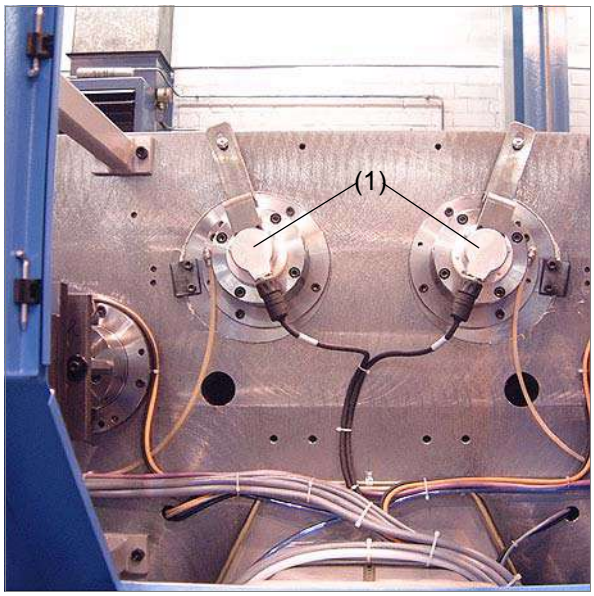

D_141_020_01

(1) Resolver

2.2 Cooling

Fig. 6 Diagram of drive and switchgear cabinet cooling

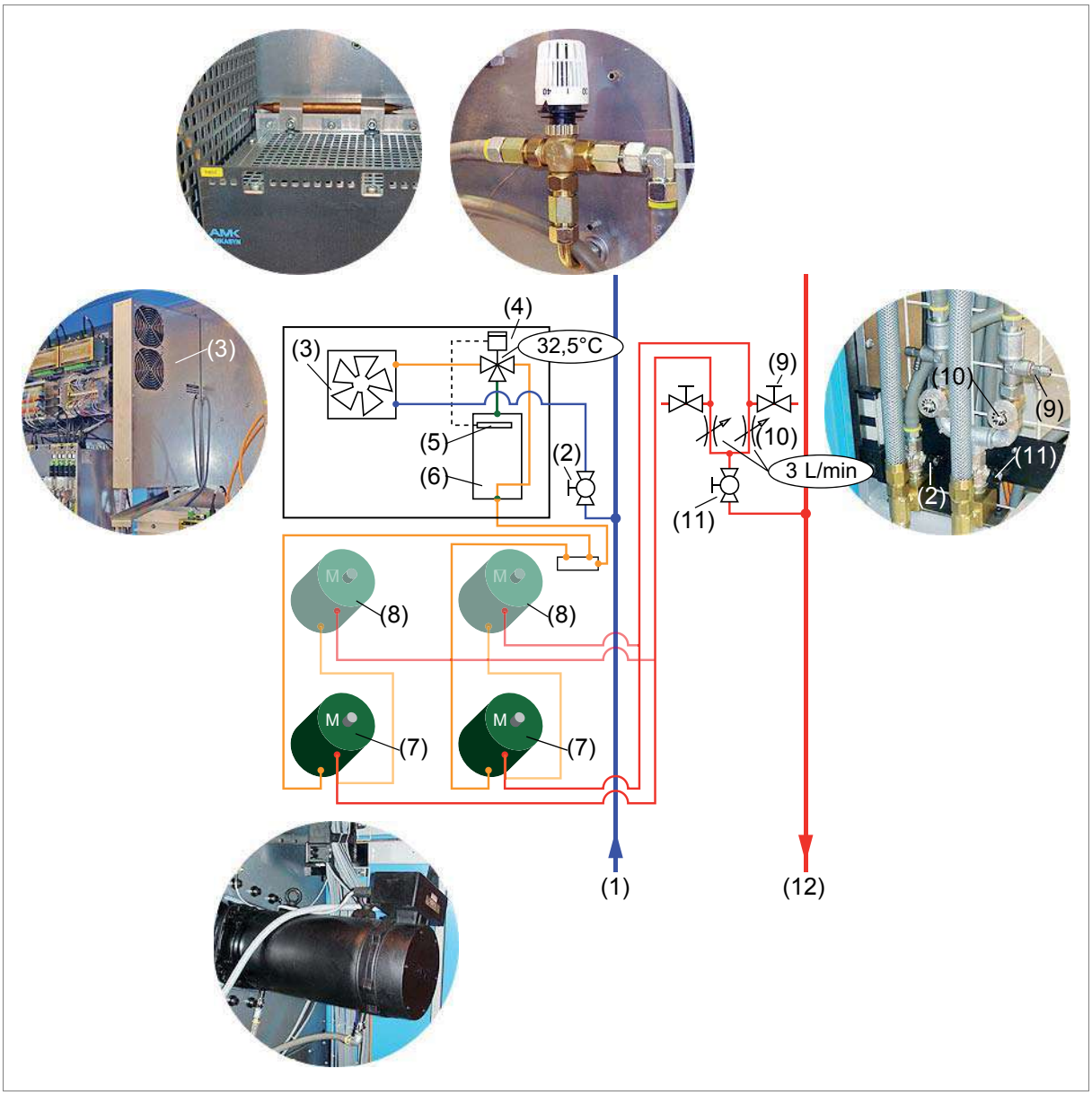

(1) Feed line
(2) Ball valve
(3) cooling unit
(4) Directional control valve
(5) Temperature sensor
(6) Cooling plate
(7) Printing couple drive
(8) Counterpressure cylinder drive (only with OF 470 S & evolution 471 / lower bridge)
(9) Venting tap
(10) Flow controller
(11) Ball valve
(12) Reverse line

2.3 Manual drive

Manual drives are installed on side II of each bridge (Fig. 7); (Fig. 8).

The manual drives are for:

- inching forward and backward during setting and maintenance and repair work.
- freeing people who have been trapped in emergencies (always with a doctor present in serious cases).

When cover (1) is removed, magnetic sensor (2) triggers the *SAFE-STOP* command. The printing couples can be moved manually using the supplied crank handle (3). If the inking unit clutch is disengaged, turn the blanket cylinder and plate cylinder only. If the inking unit clutch is engaged, also turn the oscillating drum and all the rollers that have been thrown onto it.

Fig. 7 Cover, side II

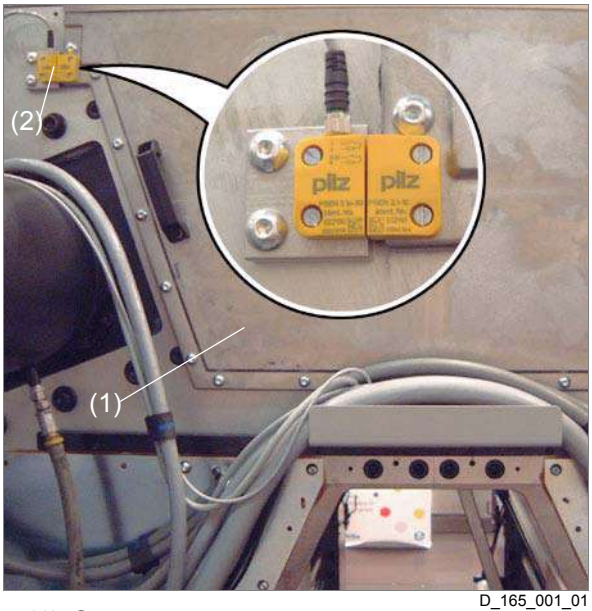

D_165_001_01

(1) Cover
(2) Magnetic sensor

Fig. 8 Manual drive gearing

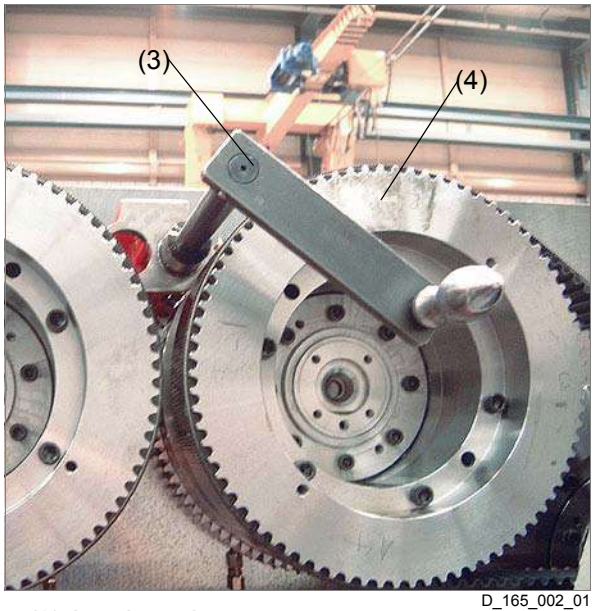

D_165_002_01

(3) hand crank
(4) Blanket cylinder gearwheel

2.4 Drive control

2.4.1 Concept

The drive control is installed in the bridge boxes (+BK BU / +BK BO) (Chapt. 1 Overview in Reg. 7 Electrical and control systems).
The resolvers on side I read the angular position of the cylinders and forward the values to the drive control (Fig. 9).
The motor encoders are read by the WiSiBox. The WiSiBox uses the data to control the drive enable, which in turn guarantees safety.

Fig. 9 Drive control

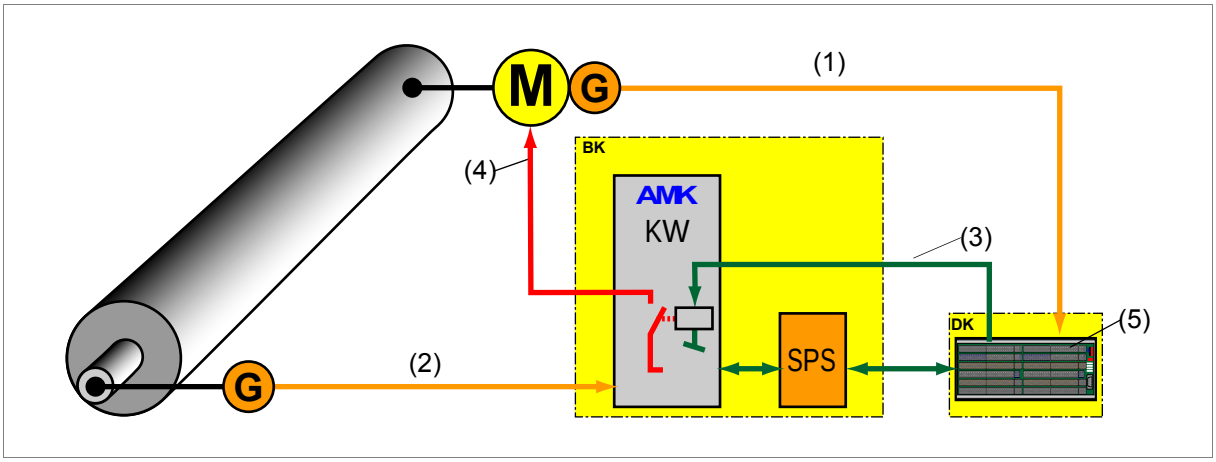

(1) Motor encoder signal
(2) Resolver signal, side I
(3) Drive enable signal
(4) Drive power supply
(5) WiSiBox

With the commands *INSERT PLATES* and *LIFT OUT PLATES* the speed of the cylinders with the motor resolver is read into the WiSiBox and monitored. If the cylinder speed exceeds 7.5 m/min., the drive concerned is stopped.

Note

Further information about the drive control is found in the following documents:

- Chapt. 2.2.2 CANOpen bus in Reg. 7 Electrical and control systems
- Reg. 10 AMKASYN in the *System* file
- Documentation of the manufacturer in the *Suppliers' documentation* file

2.4.2 Synchronization

The cylinders of the printing unit are synchronized with the help of the resolvers (1) (Fig. 10). The values of the resolvers (1) are read via AMK compact inverters and passed to the PLC control system via the CANOpen bus.

The printing units are synchronized by the Symac via the Sercos cross communication (Chapt. 2.2.2 Serial realtime communication system (SERCOS III) in Reg. 7 Electrical and control systems in the *System* file).

Fig. 10 Synchronization of printing unit, view from side I

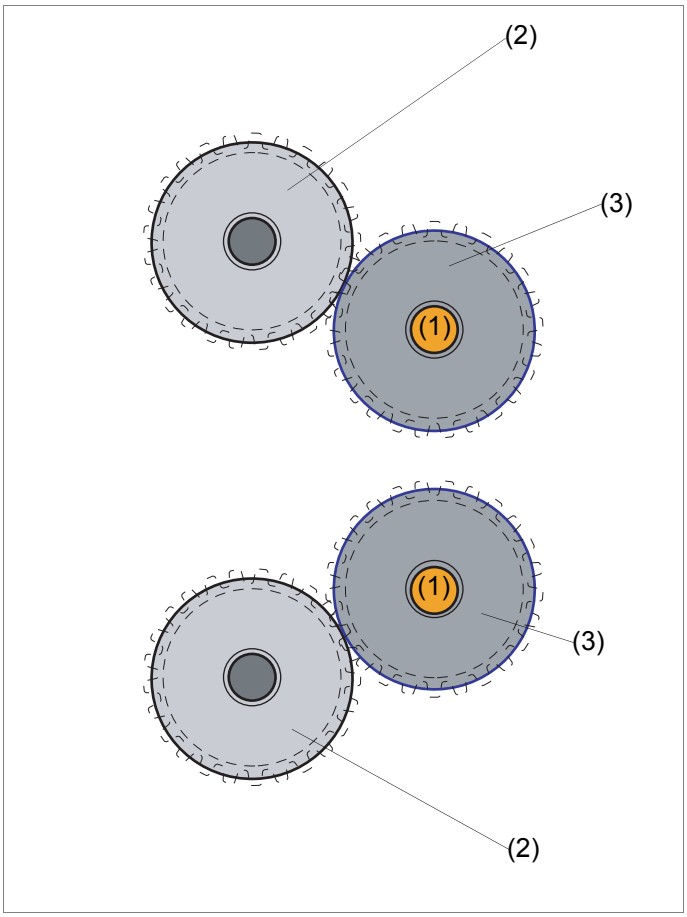

(1) Resolver
(2) Plate cylinder
(3) Blanket cylinder

3 Replace components

Contents

This chapter contains the following information:

- Chapt. 3.1 WIFAG article numbers
- Chapt. 3.2 Replacing the printing couple drive
- Chapt. 3.3 Replacing the timing belt
- Chapt. 3.4 Replace resolver
- Chapt. 3.4 Replace resolver
- Chapt. 3.5 Replace drive controller

Specification

For safety reasons only the replacement work described in these operating instructions may be performed! All replacement work not described herein must be performed by qualified WIFAG personnel.

3.1 WIFAG article numbers

Tab. 1 Overview of components and accessories

Article	Obtainable only from WIFAG	Can be ordered from WIFAG
Resolver	A4-04070EW	----------
Timing belt	A60960	----------
printing couple drive	1285870	----------
Frequency measuring device	A4-12859RO	----------
Device for drive change	1066166	----------
Loctite 5910	----------	A96762
Loctite 245	----------	A96890
Lubricant spray WD-40	----------	A62363 / A62386 / A62387

3.2 Replacing the printing couple drive

Requirements

- Production group / function group at standstill
- Work on the electrical system may be performed only by specially trained **technicians**.
- Read Chapt. 8.9 Carrying out repairs in Reg. 2 Important for your safety in the *System* file.

Materials needed

- Allen key set
- Allen key 14 mm
- Fork wrench size 24
- Ratchet with hex key adaptor size 24
- Extension for Allen key 10 mm
- Torque wrench with a 14 mm Allen socket
- Torque wrench with 0.20 in Allen socket
- Venting hose with quick-release coupling
- Bucket
- Frequency measuring device
- Loctite 5910
- Loctite 245
- Device for drive change
- Warning sign *Work is in progress!*
- Chapt. 2.2 Replacing drives in Reg. 11 Electrical setting and commissioning instructions in the *System* file
- Chapt. 4.21 Setting timing belt tensions in Reg. 6 Maintenance

DANGER	**Danger!** **Operation** of the function group by others! => De-allocate function group from the production group at the terminal and electrically disable (push the *SAFE-STOP* pushbutton). => Place Work in progress! warning signs on the corresponding terminals and control panels. => Before entering each command at a terminal or control panel, make certain that nobody is in the danger zone.

⚠ WARNING	**Risk of injury!** **Risk of being trapped and crushed** by rotating timing belt pulleys and timing belts! => Keep hands at a safe distance from timing belts and timing belt pulleys.

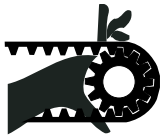

Drive removal

1. Electrically isolate drive (Chapt. 2.2 Replacing drives in Reg. 11 Electrical setting and commissioning instructions in the *System* file).
2. Remove cover (1) (Fig. 11).
3. Disconnect cooling water lines (2) (3).

Fig. 11 Cover and cooling, side II

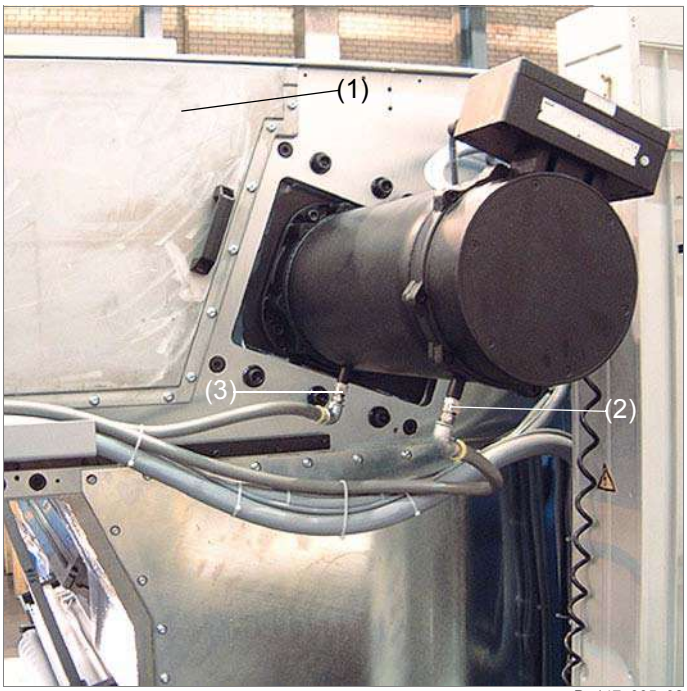

D_147_005_02

(1) Cover
(2) Connection line (from cooling plate)
(3) Reverse line

WARNING	**Risk of injury!** **Danger of crushing** if drive falls down. Weight is 170 kg! => Take precautions that the drive(s) does not fall when being replaced.

4. Screw and secure device for drive change (Fig. 12).
5. Secure drive (1).

Fig. 12 Device for drive change

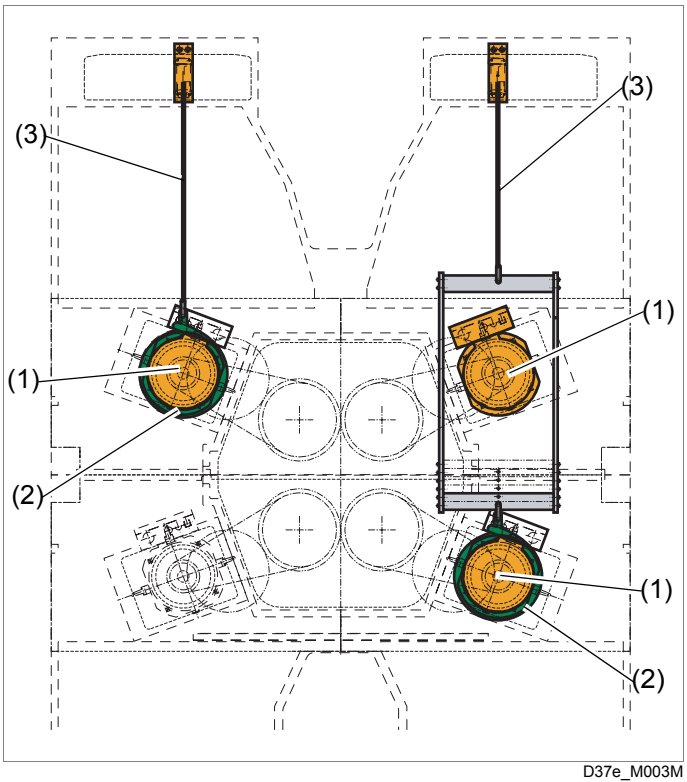

(1) Printing couple drive
(2) Slings
(3) Chain hoist

6. Loosen retaining screws (1) of both guide rails (Fig. 13).
7. Slacken locknuts (1) and turn back adjusting screw (2) (Fig. 14).
8. Turn adjusting screw (4) counterclockwise.

> Timing belt is relaxed

9. Remove timing belt.
10. Loosen retaining screws (3) (Fig. 13).
11. Remove drive (4).

Fig. 13 Guide plate

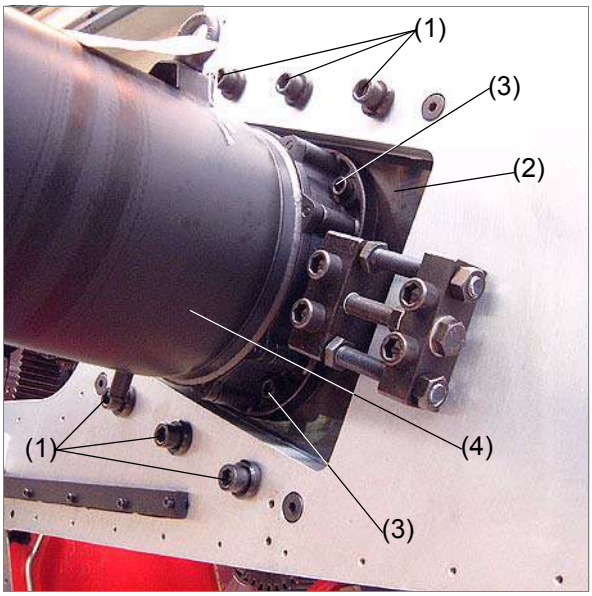

D_141_018_01

(1) Retaining screw
(2) Guide plate
(3) Retaining screw
(4) drive

Fig. 14 Tensioning device

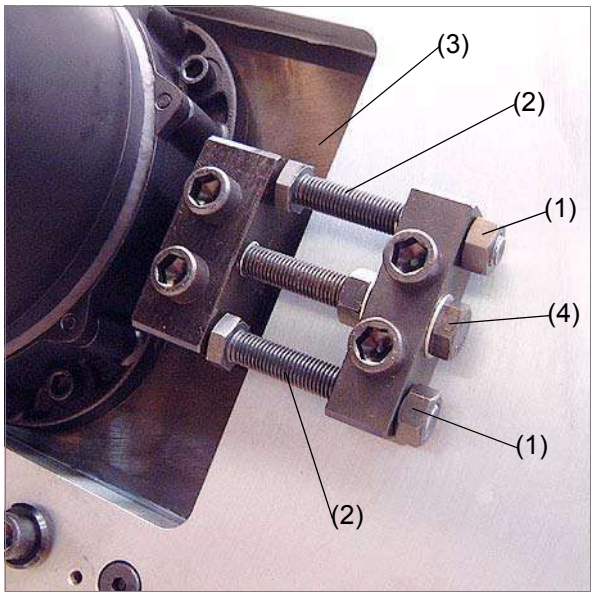

D_141_017_02

(1) Locknut
(2) Adjusting screw
(3) Guide plate
(4) Adjusting screw

Install drive

12. Clean guide plate (1) and replace O-ring (2) (Fig. 15).
13. Clean drive flange (1) and coat with Loctite 5910 (2) (Fig. 16).
14. Mount drive (4) (Fig. 13).
15. Clean retaining screws (3) and tapping hole.
16. Coat retaining screws (3) with Loctite 245 and tighten.
17. Remove device for drive change (Fig. 12).
18. Mount timing belt.
19. Electrically connect drive (Chapt. 2.2 Replacing drives in Reg. 11 Electrical setting and commissioning instructions in the *System* file).

Fig. 15 Guide plate

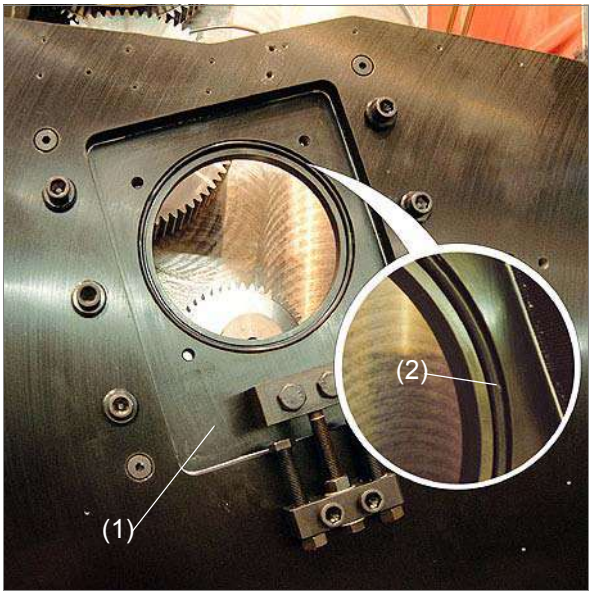

D_129_083_01

(1) Guide plate
(2) O-ring

Fig. 16 Drive

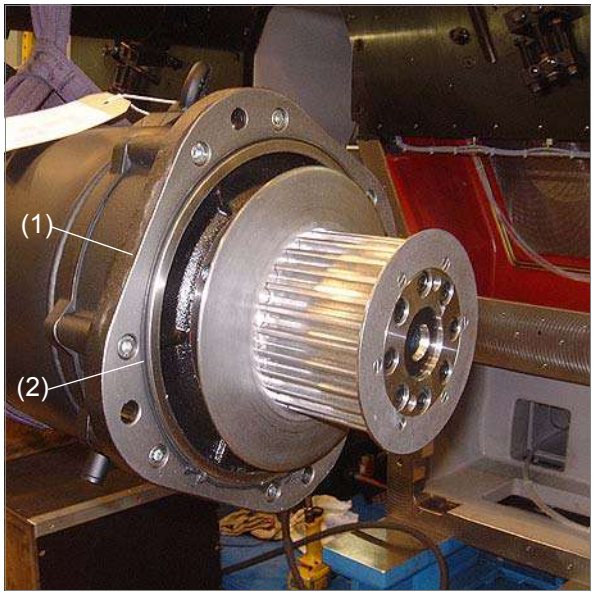

D_129_084_01

(1) Drive flange
(2) Loctite 5910

Vent cooling system

20. Attach connection line (2) (Fig. 11).
21. Stick venting hose onto connection (3) until no more air escapes.
22. Attach return line (3).

Set timing belt tension

23. Adjust timing belt tension (Chapt. 4.21 Setting timing belt tensions in Reg. 6 Maintenance).
24. Electrically enable function group with the *SAFE-STOP* pushbutton.
25. Remove *Work is in progress!* warning sign.

> The printing couple drive is replaced.

3.3 Replacing the timing belt

Note

Further information about this replacement work can be found in Chapt. 4.21 Setting timing belt tensions in Reg. 6 Maintenance.

3.4 Replace resolver

Requirements

- Production group / function group at standstill
- Work on the electrical system may be performed only by specially trained **technicians**.
- Read Chapt. 8.9 Carrying out repairs in Reg. 2 Important for your safety in the *System* file.
- Fault cause known (resolver, electrical system, control)

Materials needed

- Allen key set
- Screwdriver no. 4
- Warning sign *Work is in progress!*

DANGER	**Danger!** Risk of a lethal electric **surge**! => Work on electrical switching plants may be carried out only by personnel with the relevant training. => Observe instructions in Chapt. 5.1 Switching the power supply on and off in Reg. 2 Important for your safety. => Before touching electrical components, ensure that the power to the function group is switched off and check with a voltmeter.

Remove resolver

1. Take off plug (3) (Fig. 17).
2. Slacken retaining screw (4) (Fig. 18).
3. Loosen retaining screws (2) and remove resolver (1).

Install resolver

4. Mount resolver (1) and tighten with the retaining screws (2).
5. Tighten retaining screw (4).
6. Insert plug (3) (Fig. 17).

Fig. 17 Resolver, front view

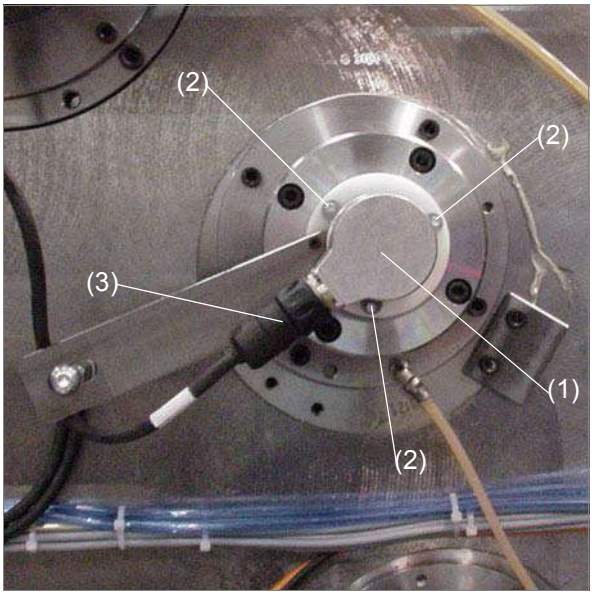

D_129_008_02

(1) Resolver
(2) Retaining screw
(3) Connector plug

Fig. 18 Resolver, cross-section

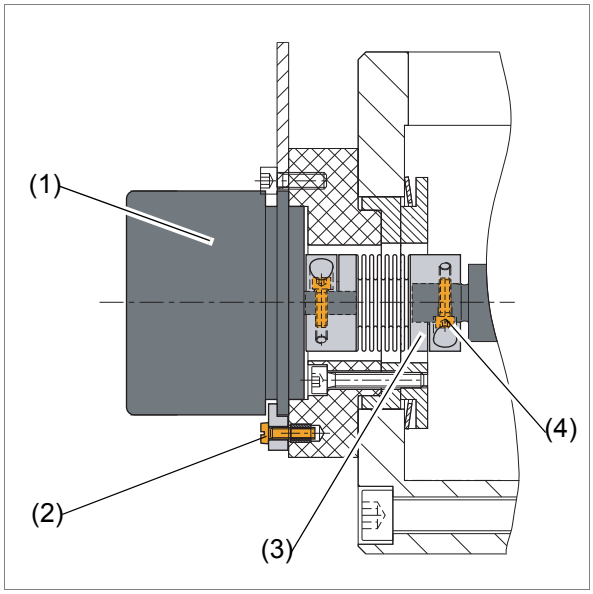

D47S_M004M

(1) Resolver
(2) Retaining screw
(3) coupling
(4) Retaining screw

Re-calibrate drive

7. Switch on the voltage supply/supplies.
8. Re-calibrate drive (Chapt. 4.2.2 Calibrate printing couple drive).
9. Remove *Work is in progress!* warning sign.

> The resolver is replaced.

3.5 Replace drive controller

Note

More information on this replacement work can be found in the following chapters:

- Chapt. 2.1 Replacing electrical devices in general in Reg. 11 Electrical setting and commissioning instructions in the *System* file
- Chapt. 3.3 AMK drive controller in Reg. 11 Electrical setting and commissioning instructions in the *System* file
- Chapt. 4.3.1 Test drives

4 Basic settings

Contents

This chapter contains the following information:

- Chapt. 4.1 Setting
- Chapt. 4.2 Calibration
- Chapt. 4.3 Testing

Specification

For safety reasons only the adjustment work described in these operating instructions may be performed! All adjustment work not described herein must be performed by qualified WIFAG personnel.

4.1 Setting

4.1.1 Set timing belt tension

Note

Further information about this adjustment work can be found in Chapt. 4.21 Setting timing belt tensions in Reg. 6 Maintenance.

4.2 Calibration

4.2.1 Reference printing couple drive

By means of referencing the drive is run to a certain transmitter position (calibration value). This ensures that all drives in the function group have a synchronized zero point. Referencing can only be done by making entries at the terminal.

The drives have to be re-referenced when the following applies:
- After failure of the uninterruptible power supply (UPS)
- After an interruption of the SERCOS ring or when re-starting the control system
- After a malfunction of the resolver or of the connection to the resolver
- After replacing the drive controller

Requirements
- Production group / function group at standstill
- Operating mode switch on position *OPERATION*
- Work on the electrical system may be performed only by specially trained **technicians**.

Materials needed
- Reg. 3 Control elements

1. On the terminal, change to the Menu Reference \ Printing couple drive mask.
2. Initiate *REFERENCE*.

> The printing couple turns to the current reference position.

3. On the terminal, change to the Information mask.

4.2.2 Calibrate printing couple drive

Calibration determines the parameters which brings into line the mechanical and electrical position of the plate cylinder or blanket cylinder. Calibration can only be done by dealing directly with the drive parameters.

The printing couples have to be recalibrated when the following applies:

- When there is a mechanical change at the resolver or in the positions of the shafts of the drive system (a resolver itself cannot be mechanically aligned. The zero impulse can only be evaluated from the electronics of the inverter.
- When the slide-in card has been replaced and the **`offset parameter ("ID 150")`** is unknown.
- After overwriting the offset parameter

Requirements

- Production group / function group at standstill
- Operating mode switch on position *OPERATION*
- Work on the electrical system may be performed only by specially trained **technicians**.
- No error messages at the terminal
- Cylinder washing unit is removed (manufacturer's documentation)

Materials needed

- Calibration gauge
- Tensioning lever for printing plates
- Reg. 3 Control elements

⚠ WARNING	**Risk of injury!** **Risk of being trapped and crushed** by rotating cylinders! => Before entering each command at a terminal or control panel, make certain that nobody is in the danger zone.

Electrically move to zero position

1. On the terminal, change to the Menu Tools \ Calibrate printing couple drive mask.
2. Initiate *REFERENCE*.

> The printing couple turns to the current reference position.

Mechanically disconnect zero position and overwrite drive parameters

3. Turn cylinders (2) (3) by hand to position (Fig. 19).
4. Place calibration gauge (1) on side II.
5. Turn cylinders (2) (3) in arrow direction and at the same time initiate the command *CALIBRATE* on the terminal (press for about 5 seconds).

> The play between the calibration gauge (1) and the cylinders (2) (4) is remedied.

> The drive parameters are overwritten.

6. Remove calibration gauge (1).

> The printing couple drive is calibrated.

Fig. 19 Calibrate printing couple drive

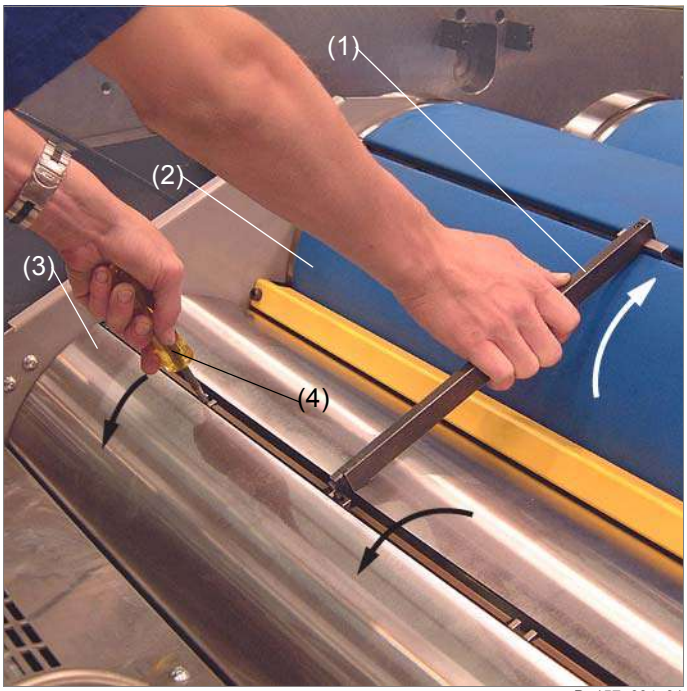

D_157_004_01

(1) Calibration gauge
(2) Blanket cylinder
(3) Plate cylinder
(4) Tensioning lever for printing plates

Check

7. Turn cylinder (2) (3) by hand out of the reference position.
8. Initiate *REFERENCE*.

Note

For the first run command after a parameter change in the inverter an error message appears on the terminal. This can be acknowledged.

9. Initiate *REFERENCE*.

> The printing couple turns to the current reference position.

10. Use the calibration gauge (1) to check the reference position.
11. Remove calibration gauge (1).

Note

To ensure trouble-free replacement of the control device, we recommend reading back the new parameter data. For further information about see Chapt. 3.1.7 WSE data backup in Reg. 11 Electrical setting and commissioning instructions in the *System* file.

4.3 Testing

4.3.1 Test drives

Requirements

- Production group / function group at standstill
- No error messages at the terminal

Materials needed

- Chapt. 2.2 KE/KW drive system in Reg. 10 AMKASYN in the *System* file
- Chapt. 3.3 AMK drive controller in Reg. 11 Electrical setting and commissioning instructions in the *System* file
- Reg. 3 Control elements

⚠ WARNING	**Risk of injury!** **Risk of being trapped and crushed** by rotating cylinders! => Before entering each command at a terminal or control panel, make certain that nobody is in the danger zone.

1. Initiate the *FEED IN* command on the terminal.

> The cylinders turn in the paper running direction.

2. Initiate the *STOP* command on the terminal.

> The drives are brought to a controlled standstill.

3. Turn operating mode switch to position *MAKEREADY*.
4. Initiate the command *INSERT PLATES / LIFT OUT PLATES* on the control panel.

> The cylinders turn a maximum of 5 m/min.

5. Turn operating mode switch to position *OPERATION*.

1. On the terminal, change to the Menu Printer \ Inking unit mask.
2. Disengage inking unit clutch.
3. On the terminal, change to the Menu Test \ Drives mask.
4. Retract blanket cylinder.
5. Scan the entire speed range and check for bearing noise and increased temperature.

In the event of unusual bearing noises or high temperatures:

=> Contact WIFAG.

6. Initiate the *SAFE-STOP* command on the control panel.

> The drives are brought to a controlled standstill as soon as possible.

7. On the terminal, change to the Information mask.

> The drive test is completed.

14 Oscillating drum and reciprocator drive

1 Overview 14.3

2 Construction and function 14.4
2.1 Oscillating drum 14.5
2.2 Oscillating drum cooling 14.6
2.3 Reciprocator drive 14.8
2.4 Inking unit clutch 14.9

3 Replace components 14.10
3.1 WIFAG article numbers 14.10
3.2 Replacing the rotary connector 14.11

4 Basic settings 14.14
4.1 Setting 14.14
4.2 Calibration 14.14
4.3 Testing 14.14

1 Overview

Fig. 1 Overview of oscillator drum and reciprocator drive, view from side II

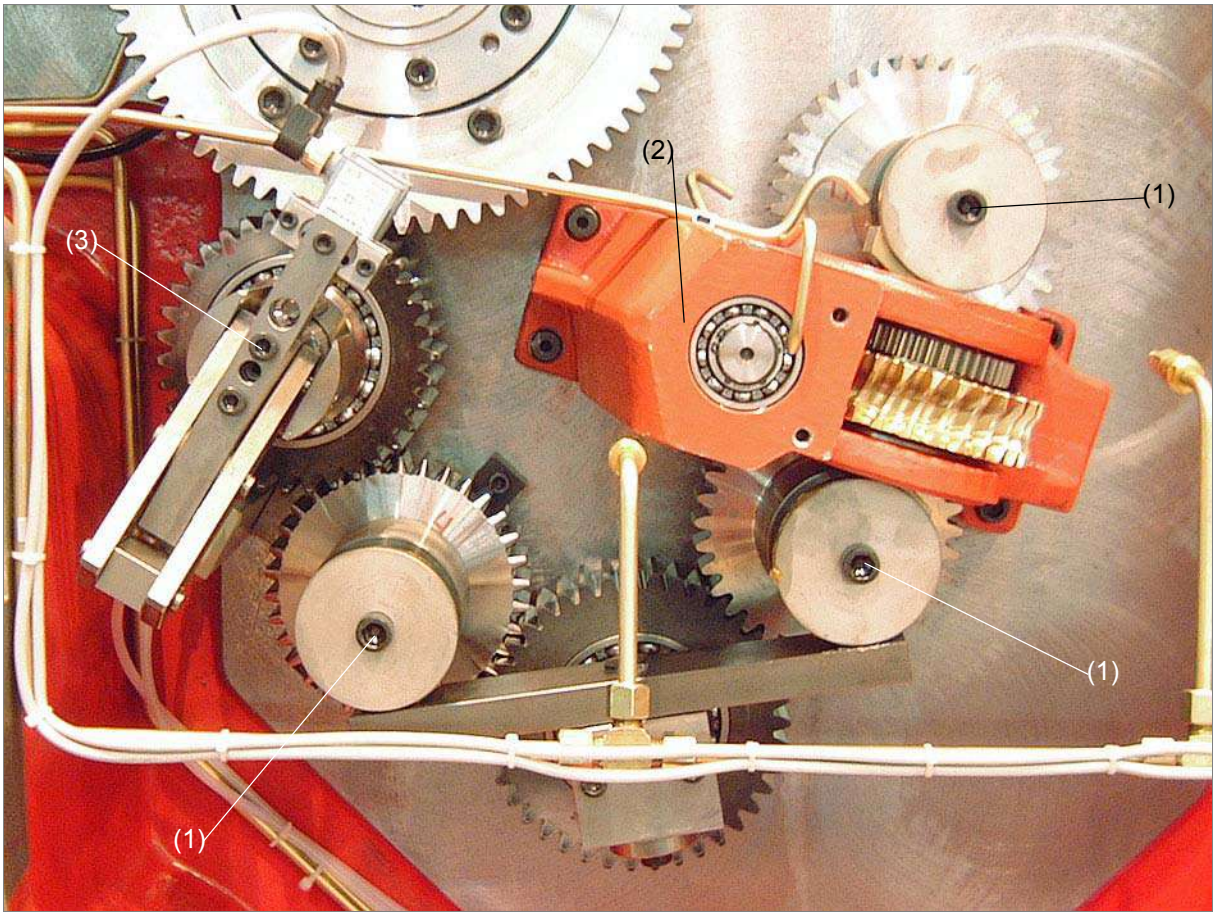

D_149_003_01

(1) Oscillating drum (Chapt. 2.1 Oscillating drum)
(2) Reciprocator drive (Chapt. 2.3 Reciprocator drive)
(3) Inking unit clutch (Chapt. 2.4 Inking unit clutch)

2 Construction and function

Contents

This chapter contains the following information:

- Chapt. 2.1 Oscillating drum
- Chapt. 2.2 Oscillating drum cooling
- Chapt. 2.3 Reciprocator drive
- Chapt. 2.4 Inking unit clutch

2.1 Oscillating drum

The oscillating drums (1) (2) spread the ink and dampening solution between the rubber rollers (3) (Fig. 2). Installed in each printing couple are two ink oscillating drums (1) and a water oscillating drum (2).
The oscillating drums (1) (2) are axially displaced by the reciprocator drive (Chapt. 2.3 Reciprocator drive).
The oscillating drums (1) (2) are driven by the printing couple drive via a gear train.
By means of the inking unit clutch, the reciprocator drive and the oscillating drums (1) (2) can be disengaged from the printing couple drive (Chapt. 2.4 Inking unit clutch).

Note

Information about the printing couple drive can be found in the following chapters:

- Chapt. 2.1 Printing couple drive in Reg. 13 Printing couple drive
- Chapt. 2.4 Drive control in Reg. 13 Printing couple drive

Fig. 2 Oscillating drums, view from side I

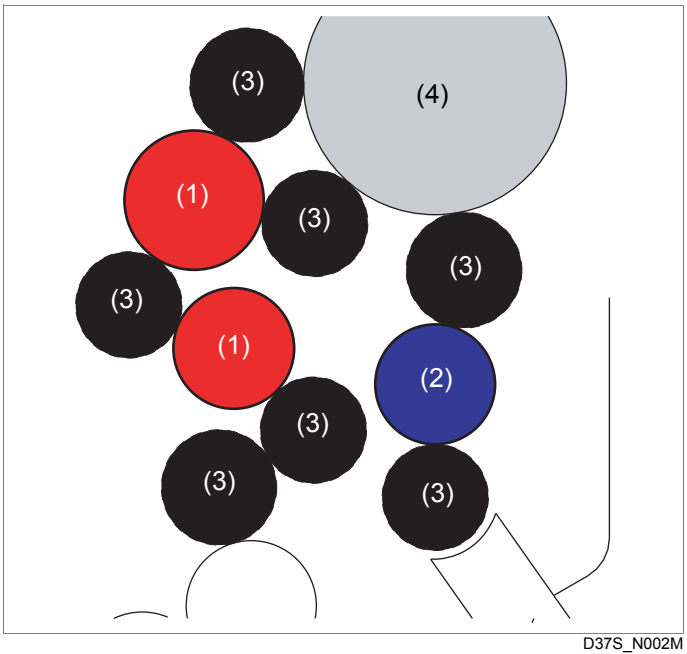

(1) Ink oscillator drum
(2) Water oscillator drum
(3) Rubber roller
(4) Plate cylinder

2.2 Oscillating drum cooling

The ink oscillating drum in contact with the ink form rollers is connected to the water cooling (Fig. 3). The water cooling is switched on as of a machine speed of > 10 000 Zyl.U/h and when the ink feed is active, and switched off again at a speed of < 8 000 Zyl.U/h.

Fig. 3 Diagram of the oscillating drum cooling

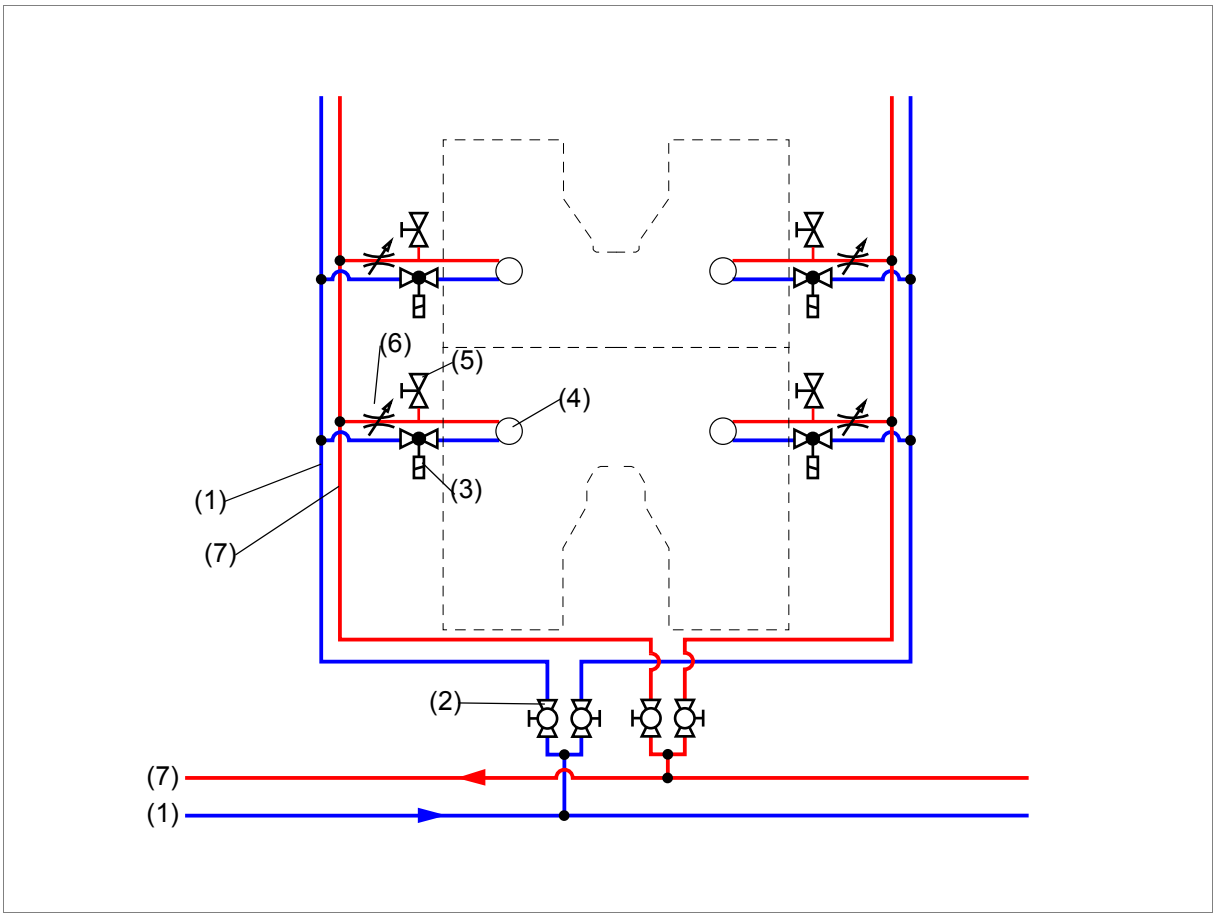

(1) Feed line (Fig. 4); (Fig. 5)
(2) Stop-cock
(3) Solenoid valve (Fig. 4)
(4) Rotary connection on the oscillating drum (Fig. 5)
(5) Venting tap (Fig. 4)
(6) Flow controller (setting = 6 l/min) (Fig. 4)
(7) Reverse line (Fig. 4); (Fig. 5)

Fig. 4 Fittings on the printing couple; front face I

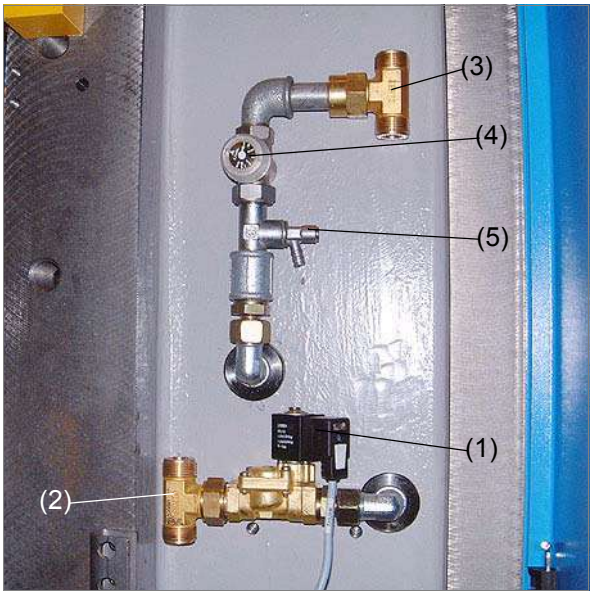

D_162_007_01

(1) Solenoid valve
(2) Feed line
(3) Reverse line
(4) Flow controller
(5) Venting tap

Fig. 5 Connection on the oscillating drum; side I

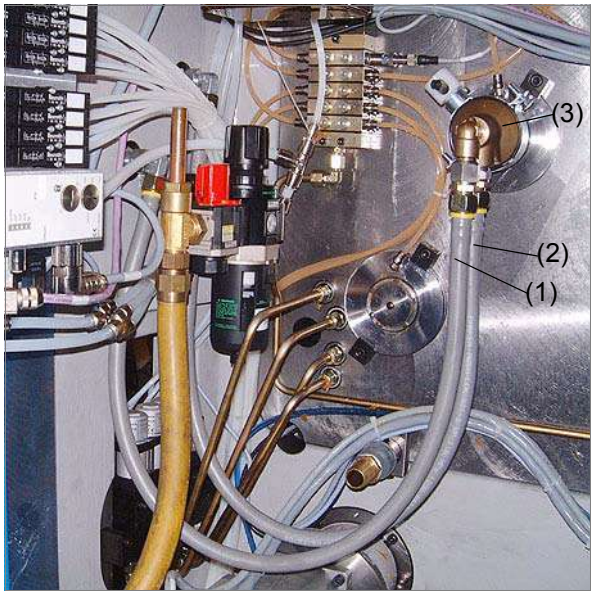

D_162_008_01

(1) Feed line
(2) Reverse line
(3) Rotary connector

2.3 Reciprocator drive

The oscillating drums (4) are axially displaced by the reciprocator drive (5) (Fig. 6). The axial movement (called reciprocation) is transferred to the guide component (8) by the sliding pads (7).

The reciprocator drive is driven by the printing couple drive via a gear train.
By means of the inking unit clutch (3) the reciprocator drive (5) and the oscillating drums (4) can be disengaged from the printing couple drive (Chapt. 2.4 Inking unit clutch).

Note

Information about the printing couple drive can be found in the following chapters:

- Chapt. 2.1 Printing couple drive in Reg. 13 Printing couple drive
- Chapt. 2.4 Drive control in Reg. 13 Printing couple drive

Fig. 6 Reciprocator drive, side II

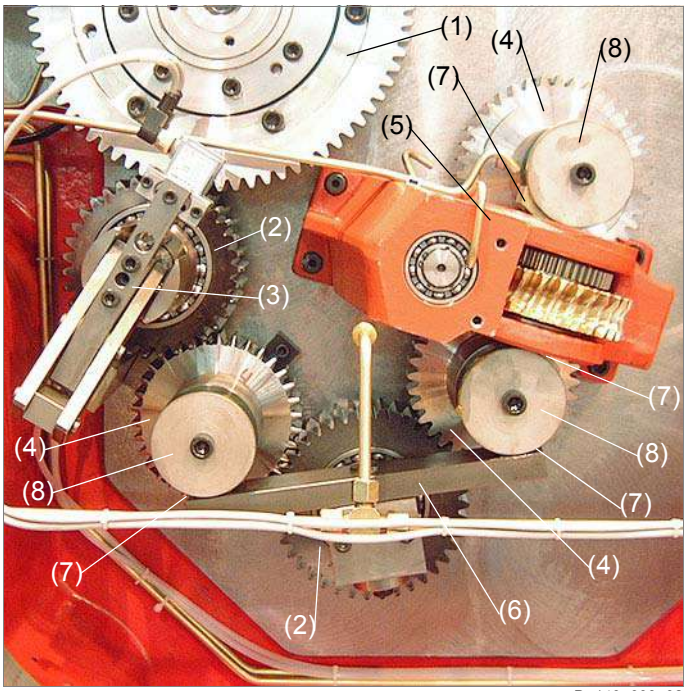

D_149_003_02

(1) Plate cylinder gearwheel
(2) Intermediate gear
(3) inking unit coupling
(4) Oscillator drum gearwheel
(5) Reciprocator drive
(6) Reciprocator lever
(7) Sliding pad
(8) Guide piece

2.4 Inking unit clutch

By means of the inking unit clutch, the reciprocator drive and the oscillating drums can be disengaged from the printing couple drive (Fig. 7).

Note

Information about the printing couple drive can be found in the following chapters:

- Chapt. 2.1 Printing couple drive in Reg. 13 Printing couple drive
- Chapt. 2.4 Drive control in Reg. 13 Printing couple drive

The limit switches (4) and (5) detect the position of the inking unit clutch and pass the information on to machine control.

The speed for coupling and de-coupling is set at the one-way restrictor valves (2) and (3).

Note

The pneumatic valve for controlling the inking unit clutch is located on the valve bank. Information about the pneumatic valve is found in the following chapters:

- Chapt. 1.3 Pneumatic system schematics in Reg. 8 Pneumatic system
- Chapt. 2 Design and function in Reg. 8 Pneumatic system
- Chapt. 2.5 Valve bank in Reg. 8 Pneumatic system

Fig. 7 Inking unit clutch, side II

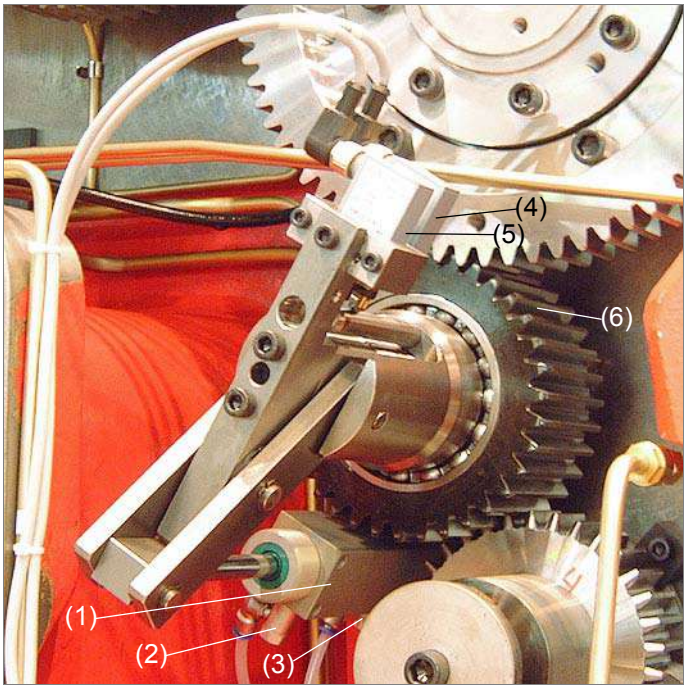

D_149_004_01

(1) Pneumatic cylinder
(2) One-way restrictor valve for engaging
(3) One-way restrictor valve for disengaging
(4) Limit switch (position *engaged*)
(5) Limit switch (position *disengaged*)
(6) Intermediate gear

3 Replace components

Contents

This chapter contains the following information:

- Chapt. 3.1 WIFAG article numbers
- Chapt. 3.2 Replacing the rotary connector

Specification

For safety reasons only the replacement work described in these operating instructions may be performed! All replacement work not described herein must be performed by qualified WIFAG personnel.

3.1 WIFAG article numbers

Tab. 1 Overview of components and accessories

Article	Obtainable only from WIFAG	Can be ordered from WIFAG
Rotary connection for oscillating drum cooling	A57200	----------
Loctite 245	----------	A96890

3.2 Replacing the rotary connector

Requirements

- Production group / function group at standstill

Materials needed

- Allen key set
- Torque wrench with 0.20 in Allen socket
- Fork wrench size 27
- Fork wrench size 36
- Screwdriver no. 4
- Pipe wrench
- Loctite 245
- Collecting bucket
- Warning signs *Work is in progress!*

⚠ WARNING	**Risk of injury!** **Risk of being trapped and crushed** by rotating axels and shafts! => De-allocate function group from the production group at the terminal and electrically disable (push the *SAFE-STOP* pushbutton). => Place *Work in progress!* warning signs on the corresponding terminals and control panels.

⚠ CAUTION	**Machine damage!** Damage to **electrical components** due to escaping cooling water! => Close stop-cock on feed line. => Carefully loosen the line connections and rotary connection over a collecting bucket.

Remove rotary connector

1. Remove cover (1) of manual drive side II and fit crank handle (Fig. 8).
2. Set flow controller (1) to 0 l/min (Fig. 9).
3. Mark line connections (3); (4) (Fig. 10).
4. Carefully loosen line connections (3); (4) over the collecting bucket.
5. Carefully loosen rotary connector (6) over collecting bucket and remove (use crank handle to lock rotary movement).

Preparing the new rotary connector for installation

6. Remove and clean screw unions (2).
7. Coat thread on screw unions (2) with Loctite 245 and screw tightly onto new rotary connector (6).
8. Remove pipe clip (1) and screw tightly onto new rotary connector (6).
9. Remove and clean inlet pipe (5).
10. Coat thread on inlet pipe (5) with Loctite 245 and screw tightly onto new rotary connector (6) as far as the stop.
11. Check dimension 371 mm.

Installing rotary connector

12. Clean borehole on ink oscillating drum (7), making sure that no Loctite residue gets into ink oscillating drum (7) or the cooling system.
13. Clean thread on rotary connector (6) and coat with Loctite 245.
14. Screw in and tighten rotary connector (6) (use crank handle to lock rotary movement).
15. Screw line connections (3); (4) on tightly.
16. Replace cover (1) for manual drive side II and tighten with torque of 4 Nm (Fig. 8).

Vent the line system

17. Open stop-cock on feed line.
18. Fit hose piece to venting tap (2) and place extremity in collecting bucket (Fig. 9).
19. On the terminal, change to the Printer\Inking unit 2 menu mask.
20. Switch on oscillating drum cooling until no more air emerges.
21. Switch off oscillating drum cooling.
22. Set flow controller (1) to 6 l/min.
23. On the terminal, change to the Information mask.
24. Electrically enable function group with the *SAFE-STOP* pushbutton.
25. Remove *Work is in progress!* warning sign.

> The rotary connector is now replaced.

Fig. 8 Enclosure, side II

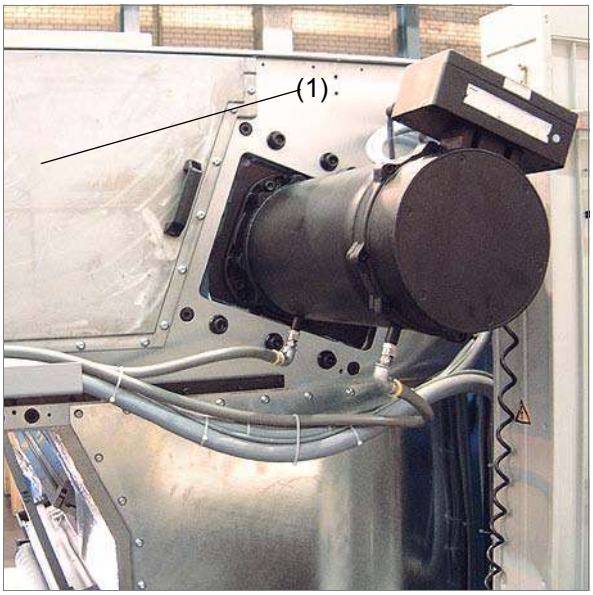

D_147_005_01

(1) Cover

Fig. 9 Fittings, front face I

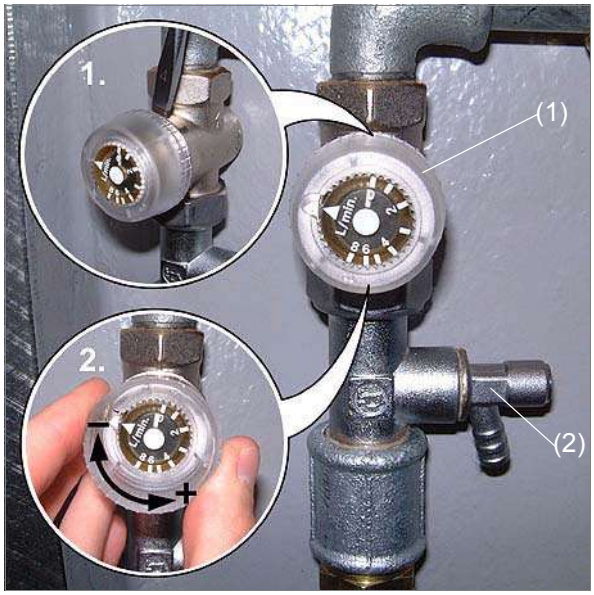

D_162_004_01

(1) Flow controller
(2) Venting tap

Fig. 10 Rotary connector, side I

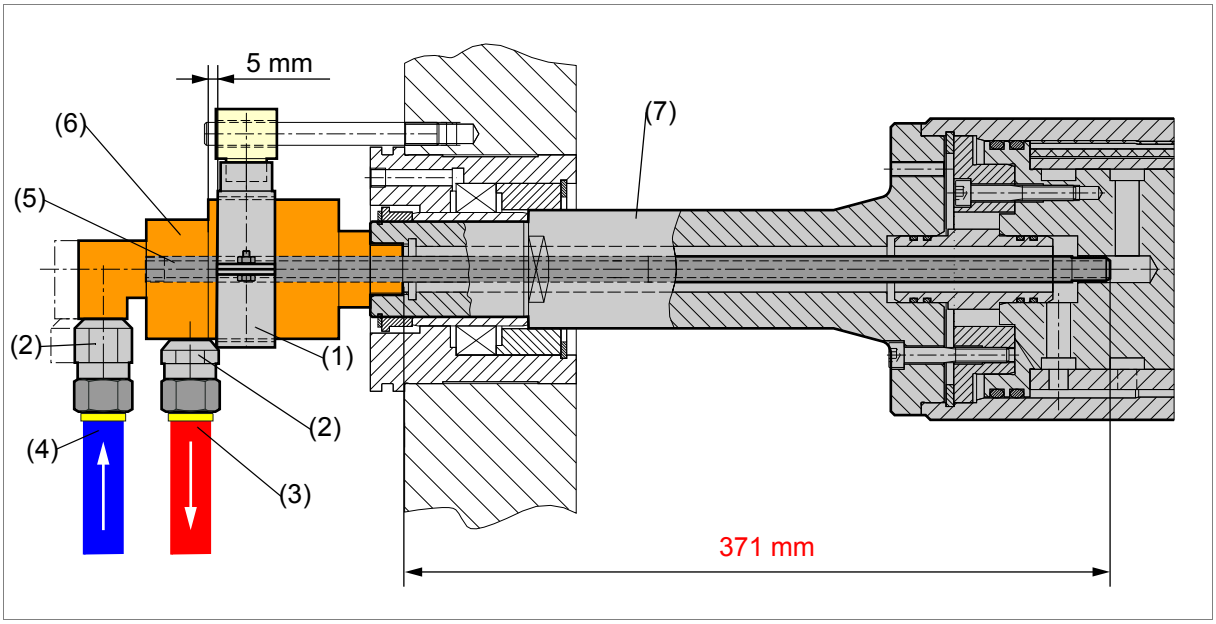

D37e_N004M

(1) Pipe clip
(2) Threaded union
(3) Reverse line
(4) Feed line
(5) Inlet pipe
(6) Rotary connector
(7) Ink oscillator drum

4 Basic settings

Contents

This chapter contains the following information:

- Chapt. 4.1 Setting
- Chapt. 4.2 Calibration
- Chapt. 4.3 Testing

Specification

For safety reasons only the adjustment work described in these operating instructions may be performed! All adjustment work not described herein must be performed by qualified WIFAG personnel.

4.1 Setting

Note

No settings are necessary on this sub-function group.

4.2 Calibration

Note

No calibrations are necessary on this sub-function group.

4.3 Testing

Note

No tests are necessary on this sub-function group.

15 Rubber rollers

1 Overview **15.3**

2 Construction and function **15.4**
2.1 Cylinder form of the rubber rollers **15.5**
2.2 Designation of the rubber rollers **15.6**
2.3 Technical data of the rubber rollers **15.7**
2.4 Designation of the bearing covers and bearing shells **15.8**
2.5 Floating and fixed bearings **15.9**
2.6 Mechanical NC roller bearing **15.10**
2.7 Pneumatic roller bearing **15.12**
2.8 Roller positions and setting values (Nip) **15.13**

3 Replace components **15.15**
3.1 WIFAG article numbers **15.16**
3.2 Replace rubber roller (remove/install) **15.17**
3.3 Replace mechanical NC roller bearing **15.21**
3.4 Replace pneumatic roller bearing **15.23**

4 Basic settings **15.25**
4.1 Setting **15.26**
4.1.1 Set ink stripe widths (nip) 15.26
4.2 Calibration **15.44**
4.3 Testing **15.44**

1 Overview

Fig. 1 Overview of rubber rollers, view from side I

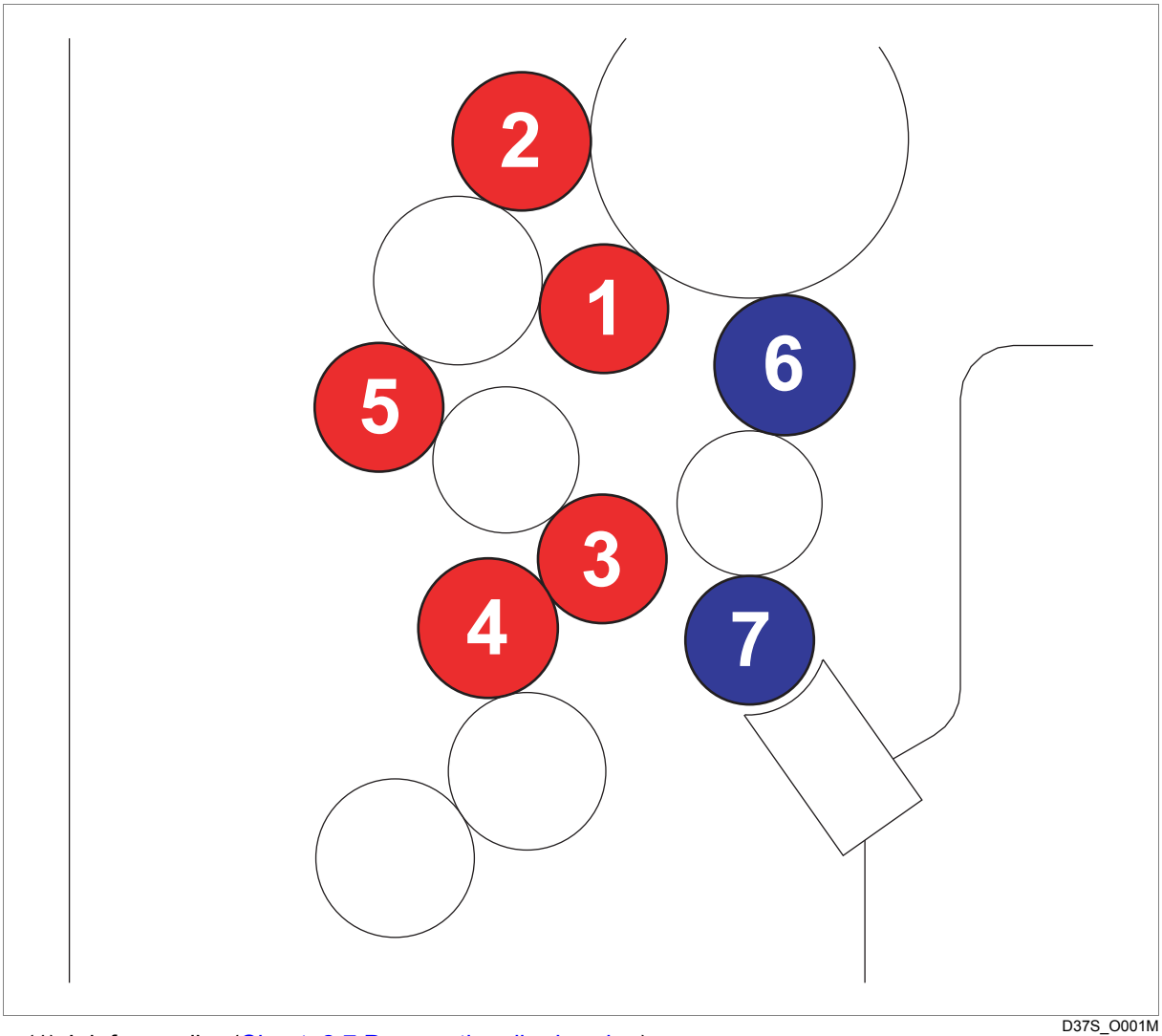

D37S_O001M

(1) Ink form roller (Chapt. 2.7 Pneumatic roller bearing)
(2) Ink form roller (Chapt. 2.7 Pneumatic roller bearing)
(3) Ink transfer roller (Chapt. 2.6 Mechanical NC roller bearing)
(4) Ink transfer roller (Chapt. 2.6 Mechanical NC roller bearing)
(5) Ink transfer roller (Chapt. 2.6 Mechanical NC roller bearing)
(6) Dampening form roller (Chapt. 2.7 Pneumatic roller bearing)
(7) Dampener transfer roller (Chapt. 2.6 Mechanical NC roller bearing)

2 Construction and function

Contents

This chapter contains the following information:

- Chapt. 2.1 Cylinder form of the rubber rollers
- Chapt. 2.2 Designation of the rubber rollers
- Chapt. 2.3 Technical data of the rubber rollers
- Chapt. 2.4 Designation of the bearing covers and bearing shells
- Chapt. 2.5 Floating and fixed bearings
- Chapt. 2.6 Mechanical NC roller bearing
- Chapt. 2.7 Pneumatic roller bearing
- Chapt. 2.8 Roller positions and setting values (Nip)

2.1 Cylinder form of the rubber rollers

Roller dimensions, surface condition and shore hardness are toleranced according to DIN 7868. The cylinder form of a roller may deviate across the whole length by 0.1 mm. With this tolerance of the cylinder form, the ink stripe width (nip) of a roller can be of different sizes at various points (Fig. 2).

Tab. 1 Basis for calculation (not customer specific)

Plate cylinder diameter	325 mm
Form roller diameter	122 mm
Cylinder form tolerance (DIN 7868 compliant)	0.1 mm
Ink stripe width (nip) deviation	**~ 2.7 mm**

Fig. 2 Deviation of the ink stripe width (nip) (not customer specific)

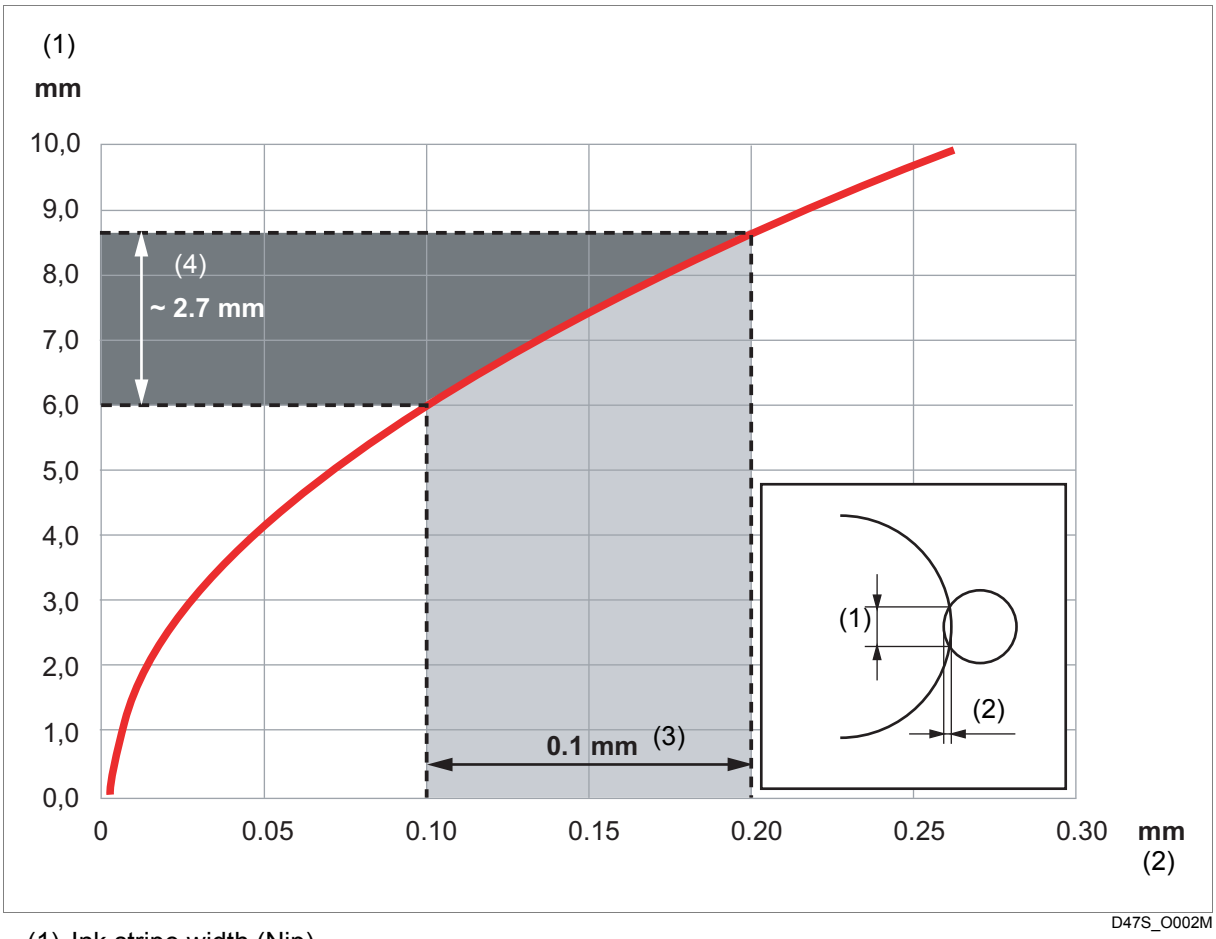

(1) Ink stripe width (Nip)
(2) Rubber roller advance to the plate cylinder
(3) max. tolerance of cylinder form
(4) max. ink stripe width (nip) deviation

2.2 Designation of the rubber rollers

Each roller is designated and entered in the roller statistics. The roller statistics enables you to know where each roller is installed and the last time it was replaced (Fig. 3).

Roller statistic content

Installation location
- Printing tower no.
- Printing couple No.

Identification & technical data
- Roller No.
- Roller diameter
- Consecutive Roller No.
- Roller type / drawing number, recesses, shore hardness A

Life cycle
- Date/initials 1st installation
- Set ink stripe width (nip)
- Date/initials 1st change, 2nd change ...

Fig. 3 Roller statistics and identification of the rollers

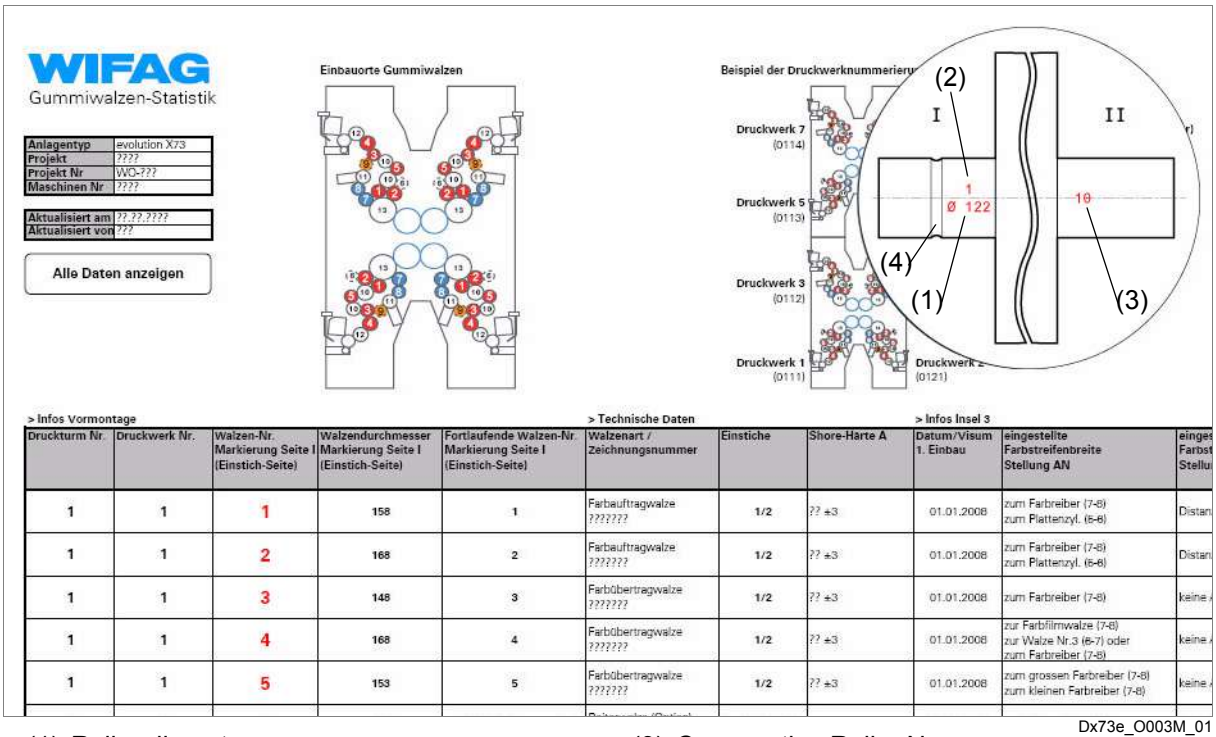

(1) Roller diameter
(2) Roller No. (installation position)
(3) Consecutive Roller No.
(4) Recesses = side I

2.3 Technical data of the rubber rollers

Tab. 2 Installed rollers on the entire system

Roller no. / Ø	**Type of roller**	**Quantity 1/2 roller**			**Shore hardness A**
		per printing couple	**reserved**	**Total**	
No. 1 / Ø 122 mm	Ink form roller	1	3	99	35 ±3
No. 2 / Ø 131 mm	Ink form roller	1	3	99	35 ±3
No. 3 / Ø 122 mm	Ink transfer roller	1	3	99	35 ±3
No. 4 / Ø 131 mm / **length 1509 mm / lower bridge**	Ink transfer roller	1	3	51	35 ±3
No. 4 / Ø 131 mm / **length 1559 mm / upper bridge**	Ink transfer roller	1	3	51	35 ±3
No. 5 / Ø 122 mm	Ink transfer roller	1	3	99	35 ±3
Roller no. / Ø	**Type of roller**	**Quantity 1/4 roller**			**Shore hardness A**
		per printing couple	**reserved**	**Total**	
No. 1 / Ø 122 mm	Ink form roller				35 ±3
No. 2 / Ø 131 mm	Ink form roller				35 ±3
No. 3 / Ø 122 mm	Ink transfer roller				35 ±3
No. 4 / Ø 131 mm / **length 1509 mm / lower bridge**	Ink transfer roller				35 ±3
No. 4 / Ø 131 mm / **length 1559 mm / upper bridge**	Ink transfer roller				
No. 5 / Ø 122 mm	Ink transfer roller				35 ±3
Roller no. / Ø	**Type of roller**	**Quantity of non two-section type rollers**			**Shore hardness A**
		per printing couple	**reserved**	**Total**	
No. 6 / Ø 131 mm	Dampening form roller	1	3	99	25 ±3
No. 7 / Ø 122 mm	Dampener transfer roller	1	3	99	25 ±3

2.4 Designation of the bearing covers and bearing shells

Bearing shells (1) and bearing covers (2) belonging together are marked with the same number (3) (Fig. 4).

Specification

The bearing shells (1) and bearing covers (2) must not be mixed up!
The same numbers (3) must always be on the same side!

Fig. 4 Designation of bearing covers and bearing shells

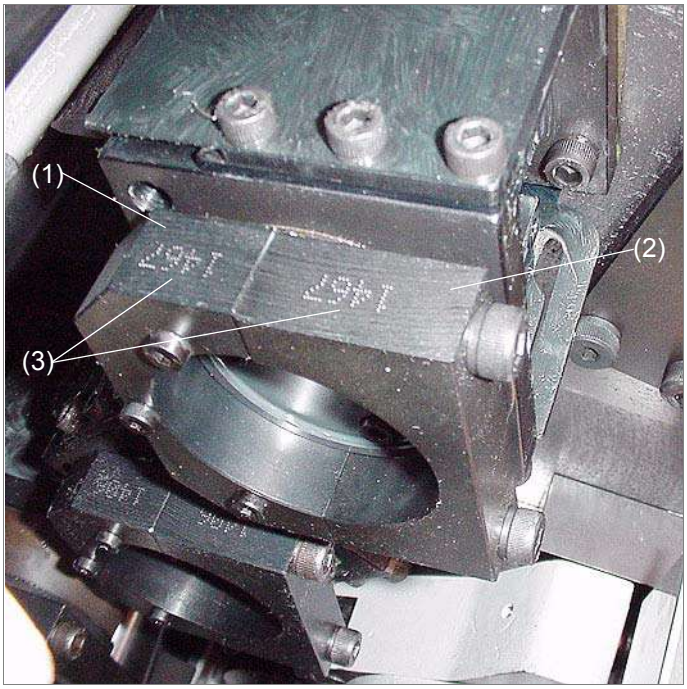

D_129_052_01

(1) Bearing shell
(2) Bearing cover
(3) Number

2.5 Floating and fixed bearings

To prevent an axial movement of the roller, the ball bearing is laterally fixed in the fixed bearing (side I) by the plate (3) (Fig. 5).

The floating bearing (side II) permits the axial expansion of the roller, which occurs due to heating in production (Fig. 6).

Fig. 5 Fixed bearing side I

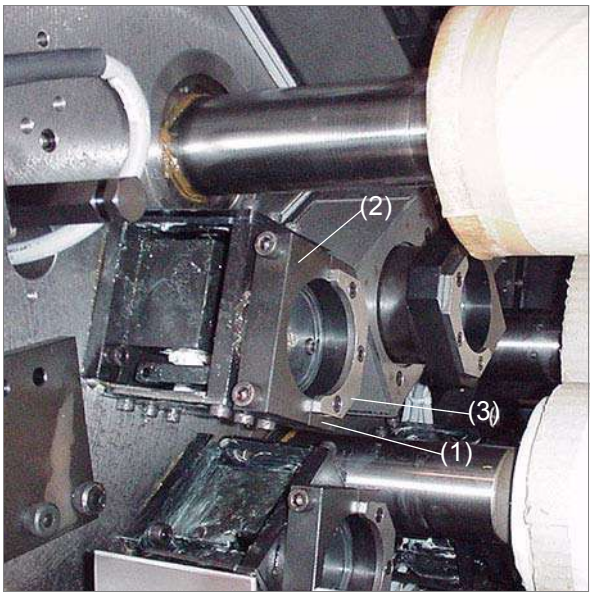

D_129_050_01

(1) Bearing shell
(2) Bearing cover
(3) Plate

Fig. 6 Floating bearing side II

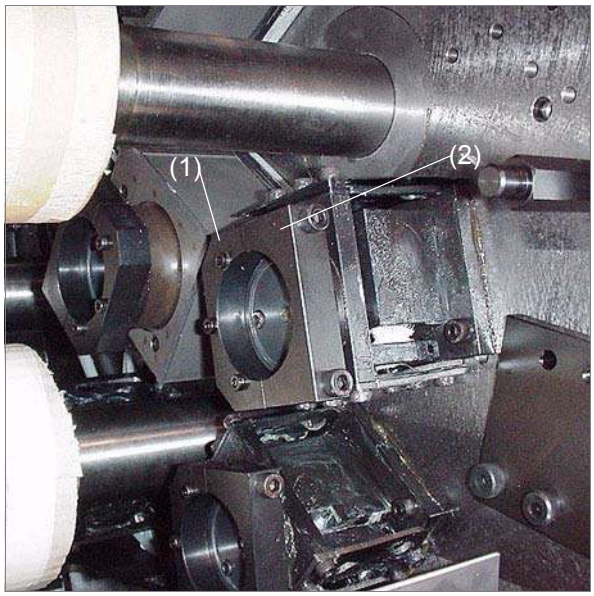

D_129_049_01

(1) Bearing shell
(2) Bearing cover

2.6 Mechanical NC roller bearing

The transfer rollers are mounted in mechanical roller bearings (Fig. 7), (Fig. 8). During production the leaf springs (1) are pressed together by the expansion of the roller and the preset ink stripe width (nip) remains nearly the same. NC = nip controlled = controlled ink stripe width (Nip)
The mechanical transfer rollers are maintenance-free.

There are three different types:
- With single adjustment (only advance)
- With dual adjustment at the front (advance + symmetry)
- With dual adjustment at the front and rear (advance + symmetry)

The ink stripe width (nip) is set with the adjusting screw (2).

The symmetry (nip distribution) of the feed axis is set with the adjusting screw (3).

Note

These angular positions cannot be changed during production.
The adjusting screw (2) (large visible screw) is designated in the setting sheets with (D).
Adjusting screw (3) (small recessed screw) is designated in the setting sheets with (E).

Fig. 7 Mechanical NC roller bearing, front (with dual adjustment at front and rear)

D_129_057_01

(1) Leaf spring
(2) Setting screw for advance
(3) Symmetry adjusting screw

Fig. 8 Mechanical NC roller bearing, rear (with dual adjustment at front and rear)

D_129_058_01

(1) Leaf spring
(2) Setting screw for advance
(3) Symmetry adjusting screw

Mode of operation of the advance

Turning the advance adjusting screw (1) (with the roller bearing fitted) moves the bearing shell plate (2) only very slightly in the advance direction (Fig. 9). This loads or releases spring (5) so that the force generated by leaf springs (6) is transferred more or less to the counter-rollers, thereby modifying the ink stripe width (nip). Bearing shell plate (2) is guided in guide (4) by roller (3).

After the adjustment spring (5) and leaf springs (6) compensate the diameter fluctuations of the rubber roller and the preset ink stripe width (nip) is virtually maintained as a result.

Mode of operation of the symmetry adjustment

Turning symmetry adjusting screw (7) shifts guide (4) in bearing block (8). The groove in bearing block (8) is at an angle to the advance direction. This causes the guide groove of roller (3) and with it bearing shell plate (2) to be moved transversely.

Fig. 9 Mode of operation of the mechanical NC roller bearing

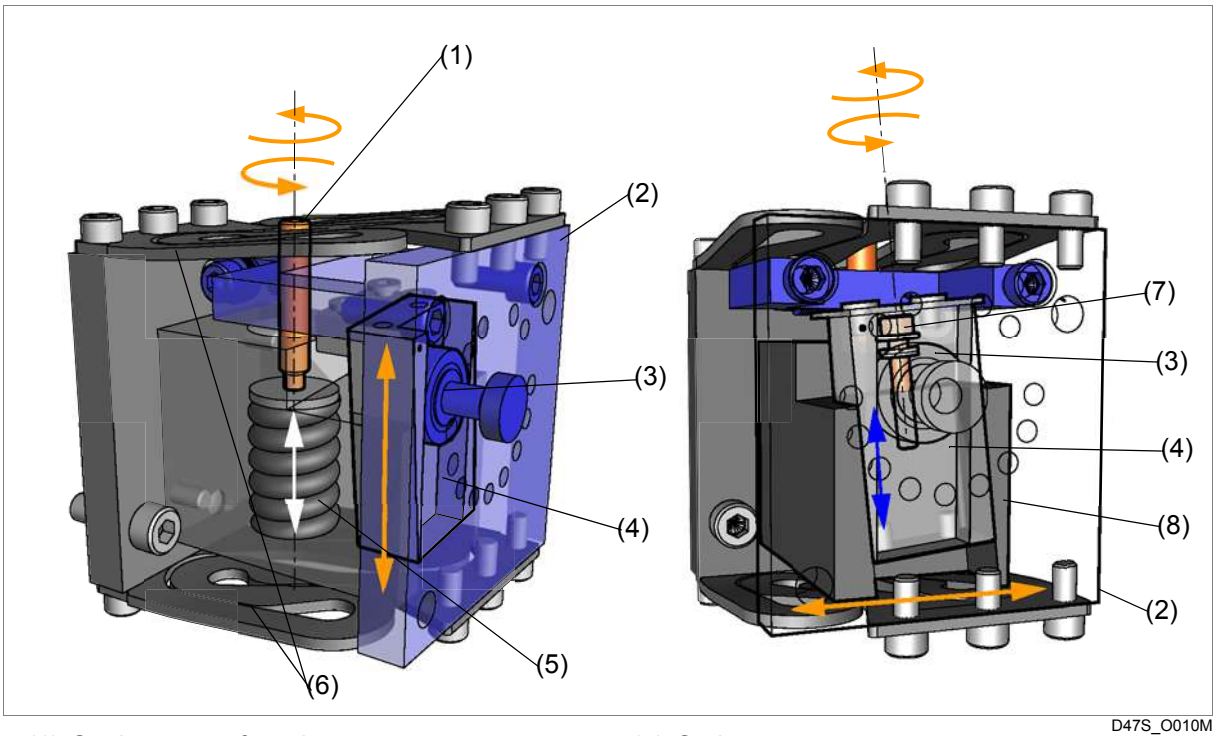

D47S_O010M

(1) Setting screw for advance
(2) Bearing shell plate (connected with the roller)
(3) Roller
(4) Guide
(5) Spring
(6) Leaf spring
(7) Symmetry adjusting screw
(8) Bearing block

2.7 Pneumatic roller bearing

The form and wash rollers are mounted in pneumatic roller bearings (Fig. 10).

The roller bearing and roller are thrown off and on with the integrated pneumatic cylinder (1). The limit stops and ink stripe widths (NIP) of the positions *THROWON* and *THROWOFF* are set with adjusting screws (3) and (4).

The symmetry (nip distribution) of the feed axis is set with the adjusting screw (5).

Note

Adjusting screw (3) is designated in the setting sheets with (G).
Adjusting screw (4) is designated in the setting sheets with (E).
Adjusting screw (5) is designated in the setting sheets with (D).

Note

The pneumatic valve for controlling the roller bearing throwon is located on the valve bank. Information about the pneumatic valve is found in the following chapters:

- Chapt. 1.3 Pneumatic system schematics in Reg. 8 Pneumatic system
- Chapt. 2 Design and function in Reg. 8 Pneumatic system
- Chapt. 2.5 Valve bank in Reg. 8 Pneumatic system

Fig. 10 Pneumatic roller bearing

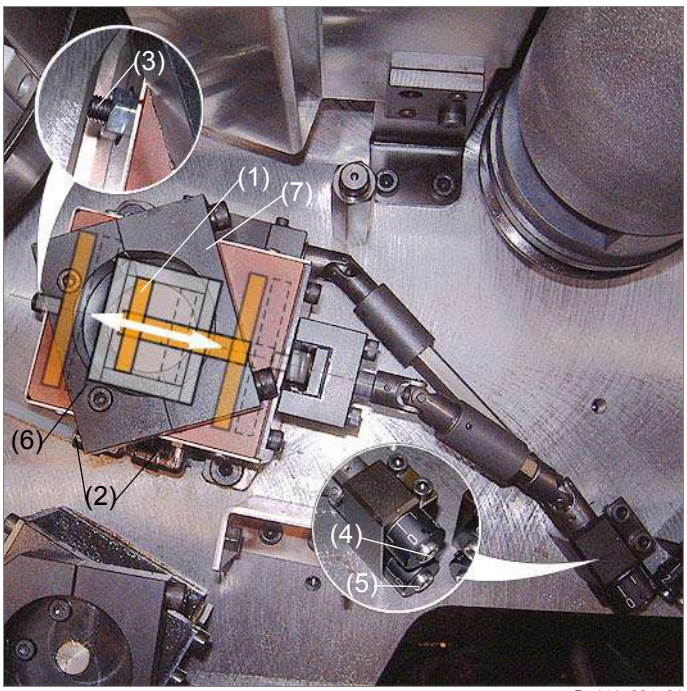

D_141_034_01

(1) Pneumatic cylinder
(2) Pneumatic lines
(3) Limit stop adjusting screw Position OFF
(4) Limit stop adjusting screw Position ON
(5) Symmetry adjusting screw
(6) Bearing shell
(7) Bearing cover

2.8 Roller positions and setting values (Nip)

Fig. 11 Installation order and ink stripe widths (nip)

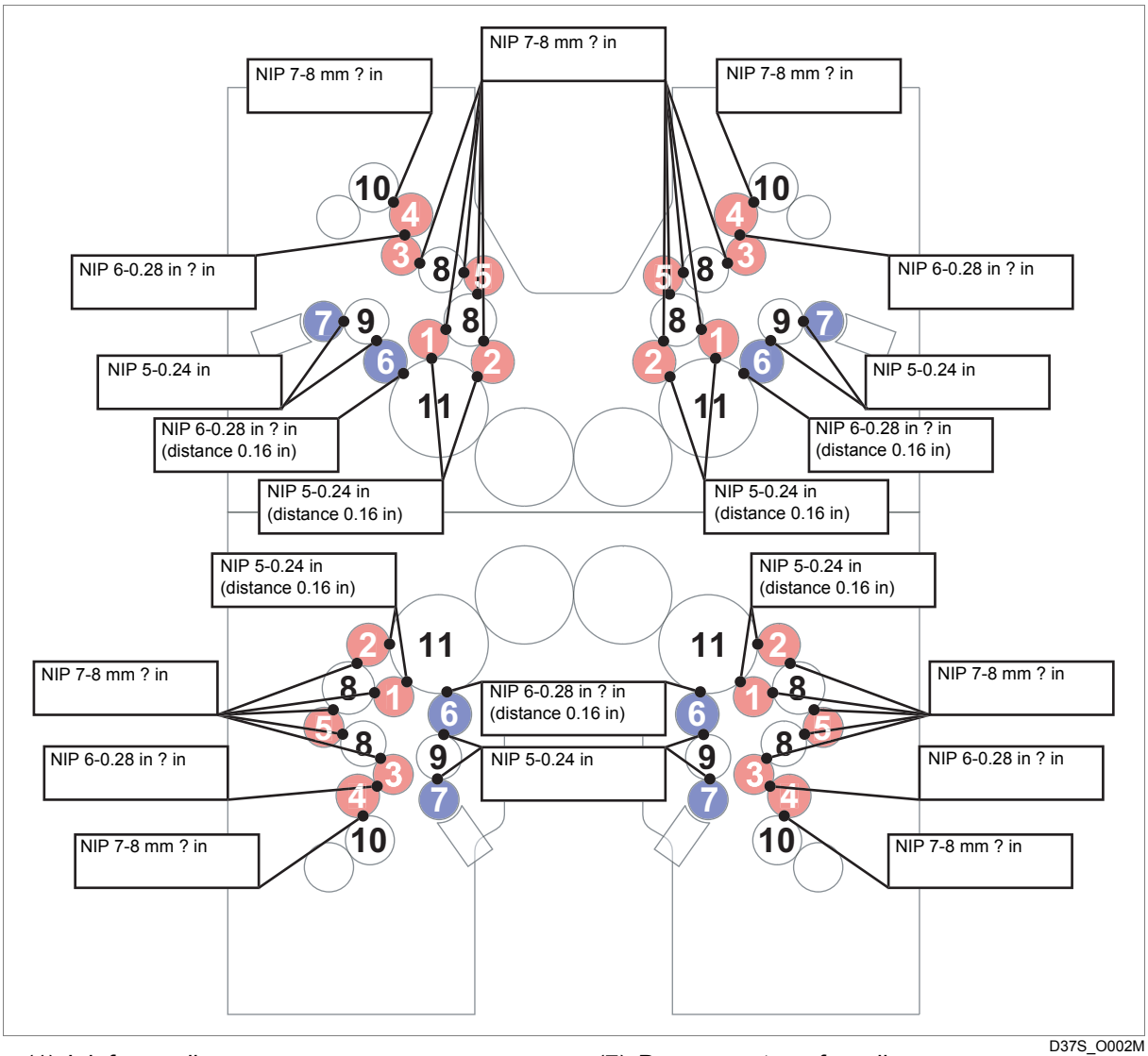

(1) Ink form roller
(2) Ink form roller
(3) Ink transfer roller
(4) Ink transfer roller
(5) Ink transfer roller
(6) Dampening form roller
(7) Dampener transfer roller
(8) Ink oscillator drum
(9) Water oscillator drum
(10) Ink pickup roller
(11) Plate cylinder

Tab. 3 Ink stripe widths (nip) and base values

Roller / roller bearing	Ink stripe widths (nip) (mm)
No. 1 ink form roller (pneumatic roller bearing)	**THROWON 7-8** to ink oscillator drum (8) **THROWON 5-6** for plate cylinder (11) **THROWOFF 4 mm** to plate cylinder (11)
No. 2 ink form roller (pneumatic roller bearing)	**THROWON 7-8** to ink oscillator drum (8) **THROWON 5-6** for plate cylinder (11) **THROWOFF 4 mm** to plate cylinder (11)
No. 3 ink transfer roller (mechanical NC roller bearing)	**THROWON 6-7** to roller (4) **THROWON 7-8** to ink oscillator drum (8)
No. 4 ink transfer roller (mechanical NC roller bearing)	**THROWON 6-7** to roller (3) **THROWON 7-8** for ink pickup roller (10)
No. 5 ink transfer roller (mechanical NC roller bearing)	**THROWON 7-8** to ink oscillator drum (8)
No. 6 dampening form roller (pneumatic roller bearing)	**THROWON 5-6** to water oscillator drum (9) **THROWON 6-7** for plate cylinder (11) **THROWOFF 4 mm** to plate cylinder (11)
No. 7 dampener transfer roller (mechanical roller bearing)	**THROWON 5-6** to water oscillator drum (9)

3 Replace components

Contents

This chapter contains the following information:

- Chapt. 3.1 WIFAG article numbers
- Chapt. 3.2 Replace rubber roller (remove/install)
- Chapt. 3.3 Replace mechanical NC roller bearing
- Chapt. 3.4 Replace pneumatic roller bearing

Specification

For safety reasons only the replacement work described in these operating instructions may be performed! All replacement work not described herein must be performed by qualified WIFAG personnel.

3.1 WIFAG article numbers

Tab. 4 Overview of components and accessories

Article	Obtainable only from WIFAG	Can be ordered from WIFAG
Rubber rollers	1416319 1416320	----------
Roller brackets (rubber rollers)	A3-13922RO	----------
Rubber rollers-complete bearing	A3-13202RO	----------
Mounting cap (rubber rollers-bearing)	A5-08336ZO	----------
Bearing puller (rubber rollers-bearing)	A3-28833ZO	----------
Roller bearing	1322020 1322021 1416273 1322017 1322019 1416729	----------

3.2 Replace rubber roller (remove/install)

Requirements

- Production group / function group at standstill
- Chapt. 4.4 Working in the tunnel / mobile terminal in Reg. 2 Important for your safety has been read.
- Rubber rollers are clean (Chapt. 4.2 Clean rubber rollers, oscillating drum, ink pickup roller in Reg. 6 Maintenance)
- New rubber roller complies to the specifications in Chapt. 2.3 Technical data of the rubber rollers
- New rubber roller is approved by WIFAG for installation

Materials needed

- Hexagon key set
- Torque ratchet wrench with 5 mm Allen key set
- Nylon hammer
- Bearing puller (WIFAG drawing no. A3-28833ZO)
- Mounting cap (WIFAG drawing no. A5-08336ZO)
- Roller brackets (WIFAG drawing no. A3-13922RO)
- Grease, WIFAG Identification No. 3 (Chapt. 1.4 Lubricant overview in Reg. 5 Lubrication)
- Grease, WIFAG Identification No. 5(Chapt. 1.4 Lubricant overview in Reg. 5 Lubrication)
- K4 Loctite 243 adhesive / ergo 4052 (Chapt. 2 Using adhesives in Reg. 12 Mechanical assembly in the System file)
- Warning signs *Work is in progress!*
- Chapt. 2.2 Designation of the rubber rollers
- Chapt. 2.3 Technical data of the rubber rollers
- Chapt. 2.8 Roller positions and setting values (Nip)
- Chapt. 4.1.1 Set ink stripe widths (nip)

⚠ WARNING	**Exposed, rotating rollers and cylinders!** Risk of injury due to pulling in, catching and crushing! => Turn operating mode switch to position *MAKEREADY*. => Actuate the *SAFE-STOP* pushbutton. => Place the *Work is in progress!* warning sign.

CAUTION	**Sharp ink knives!** Risk of cutting injury! => Handle the ink knives carefully. => During work pay attention to the danger zone of the ink knives.

ATTENTION	**Damaged roller rubber coating!** Damage to roller rubber coating due incorrect handling! => Handle rubber rollers according the roller supplier's instructions. => Always place the rubber rollers on their axes, not on the rollers' rubber coating.

Remove rubber roller

1. Loosen the retaining screws (1) and remove the bearing cover (2) (Fig. 12); (Fig. 13).
2. Lift out rubber roller.
3. Update the roller statistics.
4. Coat mechanical NC roller bearings in the vicinity of the slide valve (5) with grease (WIFAG Identification no. 5) (Fig. 12).

Fig. 12 Mechanical NC roller bearing

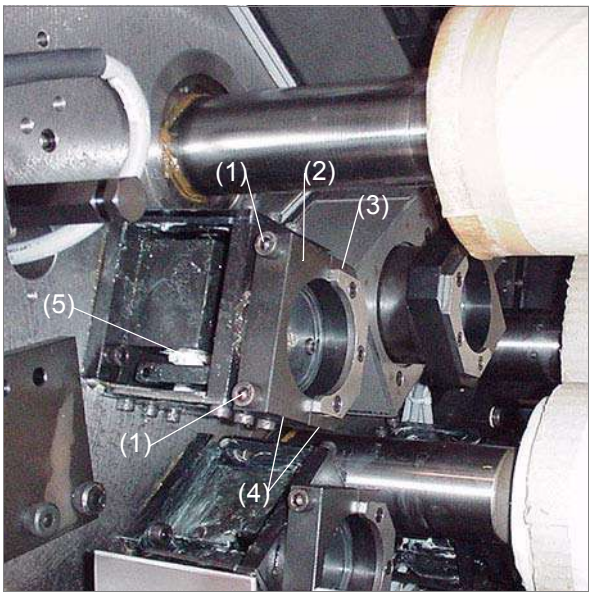

D_129_050_01

(1) Retaining screws
(2) Bearing cover
(3) Bearing shell
(4) Numbers
(5) Slide
Lubricated WIFAG Identification No. 5

Fig. 13 Pneumatic roller bearing

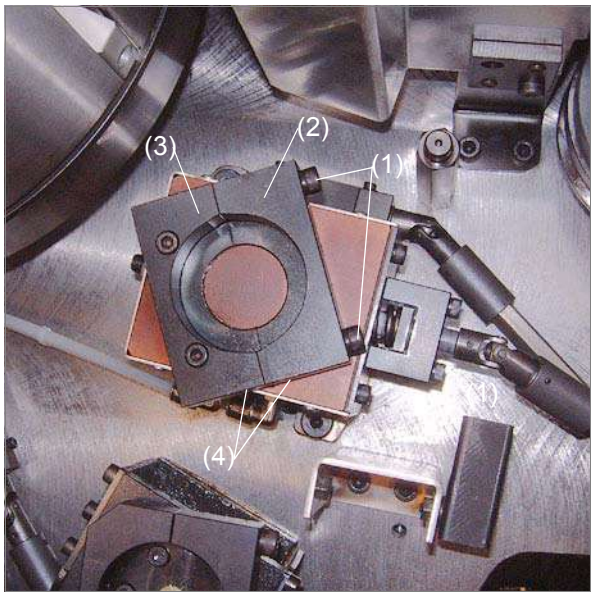

D_141_034_02

(1) Retaining screws
(2) Bearing cover
(3) Bearing shell
(4) Numbers

Prepare new rubber roller

5. Clean rubber roller axles (Fig. 14).
6. Clean Nilos rings (1), spacer rings (2), the inner rings of the bearings (3), the clamping disks (4) and the retaining screws (5).
7. Fill the offset sealing cavity of the Nilos rings (1) with grease (WIFAG Identification No. 3).
8. Slide the spacer rings (2) and Nilos rings (1) onto the rubber roller axles.
9. Coat the rubber roller axles with K4 adhesive and fit the ball bearing (3) with the hammer and supplied mounting cap.
10. Fit clamping disks (4).
11. Coat the retaining screws with K4 adhesive (5), screw them in and tighten them with a tightening torque of 18 Nm.

Fig. 14 Preparing rubber roller

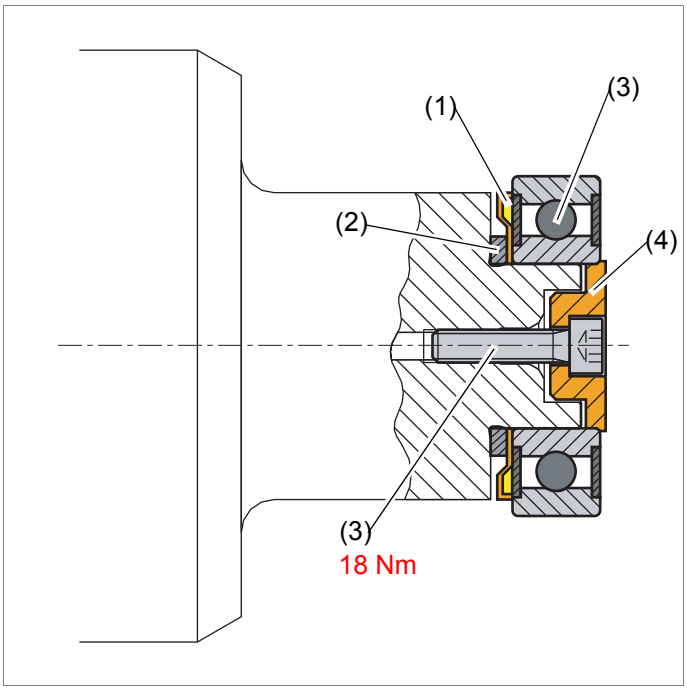

(1) Nilos ring
Lubricated WIFAG Identification No. 3
(2) Spacer ring
(3) Ball bearing (A3-13202RO
Rubber rollers-complete bearing)
Pasted: K4 adhesive
(4) Clamping disks
(5) Retaining screws
Tightening torque: 18 Nm
locked K4 adhesive

Install rubber roller

12. Clean bearing cover (2) and bearing shells (3) (Fig. 13); (Fig. 12).
13. Coat bearing cover (2) and bearing shell (3) with grease (WIFAG Identification No. 3).
14. Lift rubber roller into the bearing shell (3).

Specification

The bearing shells (3) and bearing covers (2) must not be mixed up!
The same numbers (4) must always be on the same side!

15. Place bearing cover (2) on the bearing shell (3) and tighten with the retaining screws (1).

Set ink stripe width (nip)

16. Set ink stripe width (Nip).
17. Remove *Work is in progress!* warning sign.

> The rubber roller is replaced

3.3 Replace mechanical NC roller bearing

Requirements

- Production group / function group at standstill
- Chapt. 4.4 Working in the tunnel / mobile terminal in Reg. 2 Important for your safety has been read.

Materials needed

- Hexagon key set
- Warning signs *Work is in progress!*
- Chapt. 3.2 Replace rubber roller (remove/install)
- Chapt. 4.1.1 Set ink stripe widths (nip)

⚠ WARNING	**Exposed, rotating rollers and cylinders!** Risk of injury due to pulling in, catching and crushing! => Turn operating mode switch to position *MAKEREADY*. => Actuate the *SAFE-STOP* pushbutton. => Place the *Work is in progress!* warning sign.

⚠ CAUTION	**Sharp ink knives!** Risk of cutting injury! => Handle the ink knives carefully. => During work pay attention to the danger zone of the ink knives.

Remove roller bearing

1. Remove rubber roller.
2. Clean printing unit wall and mark the position of the baseplate (1) (Fig. 15).
3. Loosen retaining screws (2) and remove roller bearing.

Install roller bearing

4. Mount new roller bearing and tighten with the retaining screws (2).
5. Install rubber roller.

Set ink stripe width (nip)

6. Set ink stripe width (Nip).
7. Remove *Work is in progress!* warning sign.

> The roller bearing has been replaced.

Fig. 15 Mechanical NC roller bearing

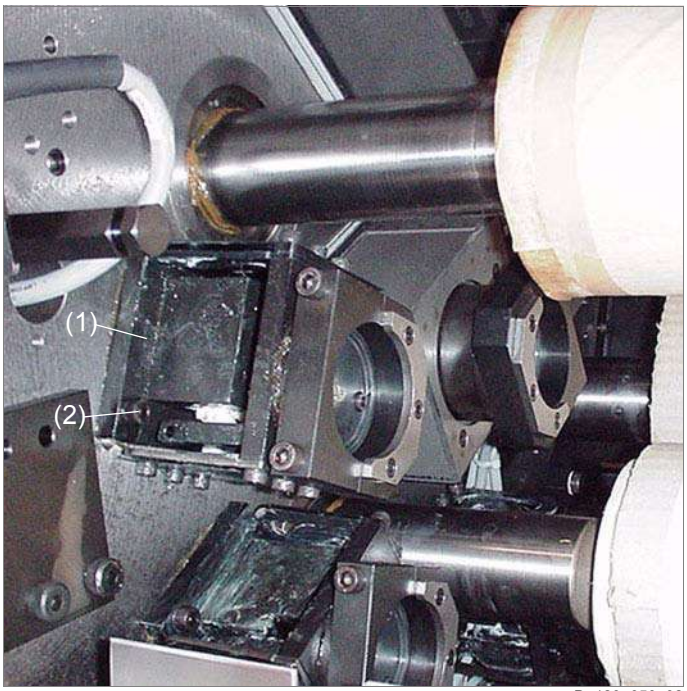

D_129_050_02

(1) Baseplate
(2) Retaining screw

3.4 Replace pneumatic roller bearing

Requirements

- Production group / function group at standstill
- Chapt. 4.4 Working in the tunnel / mobile terminal in Reg. 2 Important for your safety has been read.

Materials needed

- Hexagon key set
- Warning signs *Work is in progress!*
- Chapt. 3.2 Replace rubber roller (remove/install)
- Chapt. 4.1.1 Set ink stripe widths (nip)
- Chapt. 1.3 Pneumatic system schematics in Reg. 8 Pneumatic system

WARNING	**Exposed, rotating rollers and cylinders!** Risk of injury due to pulling in, catching and crushing! => Turn operating mode switch to position *MAKEREADY*. => Actuate the *SAFE-STOP* pushbutton. => Place the *Work is in progress!* warning sign.

CAUTION	**Sharp ink knives!** Risk of cutting injury! => Handle the ink knives carefully. => During work pay attention to the danger zone of the ink knives.

Remove roller bearing

1. Remove rubber roller.
2. Clean printing unit wall and mark the position of the baseplate (1) (Fig. 16).
3. Mark pneumatic lines (3) and detach.
4. Loosen retaining screws (2) and remove the roller bearings.

Install roller bearing

5. Mount new roller bearing and tighten with the retaining screws (2).
6. Connect pneumatic lines (3).
7. Install rubber roller.

Set ink stripe width (nip)

8. Set ink stripe width (Nip).
9. Remove *Work is in progress!* warning sign.

> The roller bearing has been replaced.

Fig. 16 Pneumatic NC roller bearing

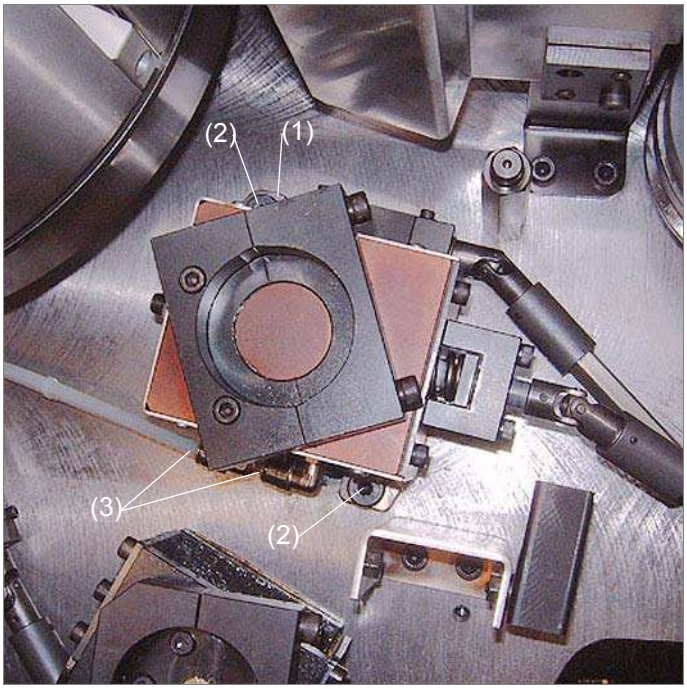

D_141_034_03

(1) Baseplate
(2) Retaining screw
(3) Pneumatic lines

4 Basic settings

Contents

This chapter contains the following information:

- Chapt. 4.1 Setting
- Chapt. 4.2 Calibration
- Chapt. 4.3 Testing

Specification

For safety reasons only the adjustment work described in these operating instructions may be performed! All adjustment work not described herein must be performed by qualified WIFAG personnel.

4.1 Setting

4.1.1 Set ink stripe widths (nip)

Requirements

- Production group / function group at standstill
- Chapt. 4.4 Working in the tunnel / mobile terminal in Reg. 2 Important for your safety has been read.
- Rubber rollers are clean (Chapt. 4.2 Clean rubber rollers, oscillating drum, ink pickup roller in Reg. 6 Maintenance)
- Plate cylinder fitted with printing plates (Chapt. 6.1 Manually insert and lift out printing plates in Reg. 4 operation)
- Blanket cylinder at *PRINTING OFF* position (Menu Printer \ Offset sequences \ Manual)
- Ink pickup roller at position *THROWON* (Menu Printer \ Offset sequences \ Manual)

Materials needed

- Allen key set
- Fork wrench size 17 mm
- Spatula
- Printing ink
- Ink stripe foil
- Portable terminal (Chapt. 2.3 Portable terminal in Reg. 3 Control elements)
- A3 copy of Chapt. 2.8 Roller positions and setting values (Nip)
- Reg. 3 Control elements

⚠ WARNING	**Exposed, rotating rollers and cylinders!** Risk of injury due to pulling in, catching and crushing! => Turn operating mode switch to position *MAKEREADY*. => Actuate the *SAFE-STOP* pushbutton. => Place the *Work is in progress!* warning sign.

⚠ CAUTION	**Sharp ink knives!** Risk of cutting injury! => Handle the ink knives carefully. => During work pay attention to the danger zone of the ink knives.

Measuring ink stripe width (nip)

1. Throw on rubber roller (only on pneumatic roller bearings).
2. Apply printing ink to the relevant rubber roller using the spatula.
3. Inch the printing couple *FORWARD* or *BACK*.

> The rollers are inked.

4. Stop printing couple about 10 seconds.
5. Retract rubber roller.
6. Inch the printing couple *FORWARD* or *BACK* until the ink stripe width (nip) (1) is visible (Fig. 17).
7. Check the ink stripe width (nip) (1) on sides I and II with the ink stripe foil (2).

Note

Because of the grooved form of the ink pickup roller, the ink stripe width (nip) can be difficult to check with the ink stripe foil. A visual check makes more sense and is more precise. For an ink stripe width (nip) of 8 mm a pattern results shown in (Fig. 18).

Fig. 17 Measure ink stripe width (nip), rubber roller

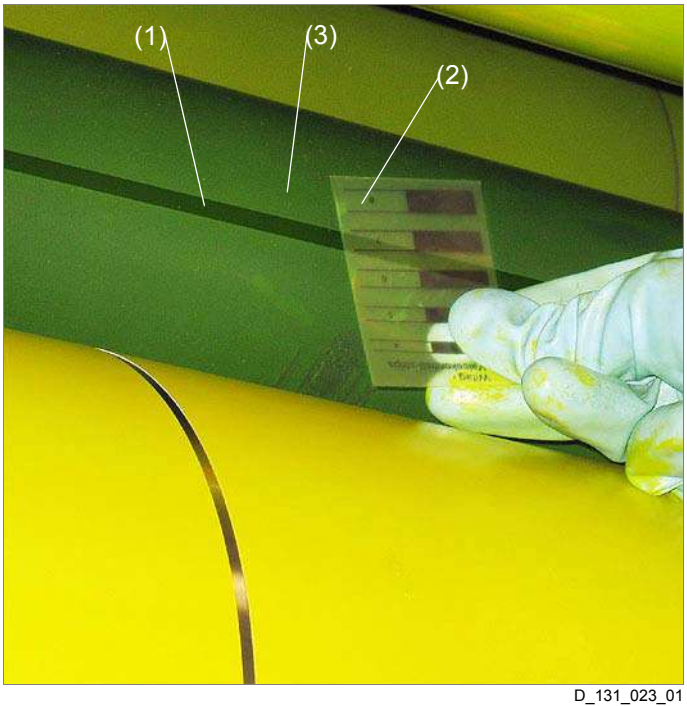

D_131_023_01

(1) Ink stripe width (Nip)
(2) Ink stripe foil
(3) Rubber roller

Fig. 18 Measure ink stripe width (nip), ink pickup roller

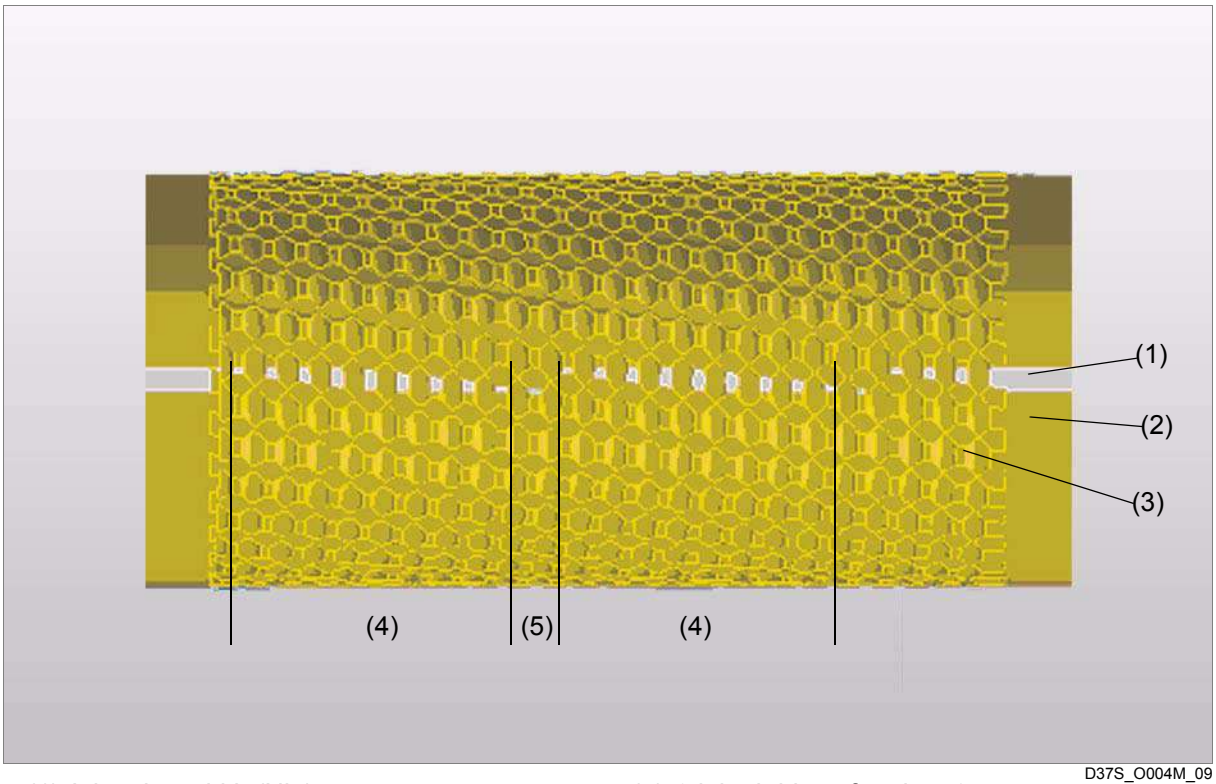

D37S_O004M_09

(1) Ink stripe width (Nip)
(2) Ink pickup roller
(3) Ridge
(4) 9 inked ridges for nip = 8 mm
(5) 1 slightly inked ridge for nip = 8 mm

Setting sheet for ink form roller no. 1

Transfer of the ink (Fig. 19):
Ink oscillator drum > *ink form roller no. 1* > plate cylinder

Set position ON

1. Throwon rubber roller.
2. Measure ink stripe width.
3. Using the symmetry (D) adjusting screws, set ink stripe width 7-8 mm to ink oscillator drum (A).
4. Using the adjusting screws stop ON (E), set ink stripe width 5-6 mm to plate cylinder (C).

Note

If larger adjustments on the adjusting screws (D) and (E) are made, both ink stripe widths change! For this reason, at the end re-measure both ink stripe widths and correct if necessary.

5. Retract rubber roller.
6. Throwon rubber roller.
7. Re-measure both ink stripe widths and correct if necessary.

> The roller is set.

Set distance of thrown off ink form roller no. 1 to plate cylinder

This distance (4 mm) is factory set. If required, this distance can be adjusted with the adjusting screw (G).

Fig. 19 Set ink form roller no. 1

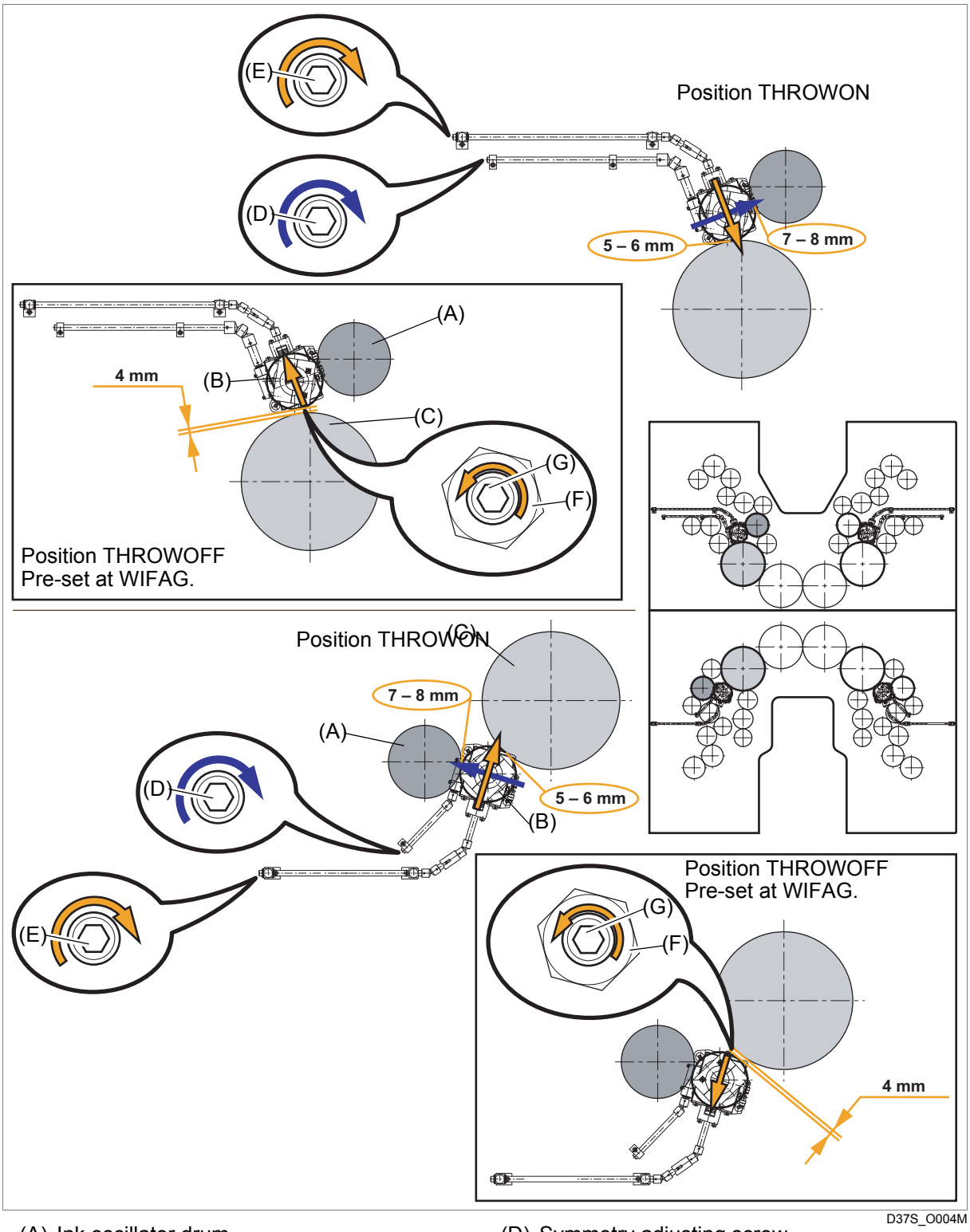

(A) Ink oscillator drum
(B) Ink form roller no. 1
(C) Plate cylinder
(D) Symmetry adjusting screw
(E) Stop ON adjusting screw
(F) Locknut
(G) Stop OFF adjusting screw

Setting sheet for ink form roller no. 2

Transfer of the ink (Fig. 20):
Ink oscillator drum / rider roller no. 6 > *ink form roller no. 2* > plate cylinder

Set position ON

1. Throwon rubber roller.
2. Measure ink stripe width.
3. Using the symmetry (D) adjusting screws, set ink stripe width 7-8 mm to ink oscillator drum (A).
4. Using the adjusting screws stop ON (E), set ink stripe width 5-6 mm to plate cylinder (C).

Note

If larger adjustments on the adjusting screws (D) and (E) are made, both ink stripe widths change! For this reason, at the end re-measure both ink stripe widths and correct if necessary.

5. Retract rubber roller.
6. Throwon rubber roller.
7. Re-measure both ink stripe widths and correct if necessary.

> The roller is set.

Set distance of thrown off ink form roller no. 2 to plate cylinder

This distance (4 mm) is factory set. If required, this distance can be adjusted with the adjusting screw (G).

Fig. 20 Set ink form roller no. 2

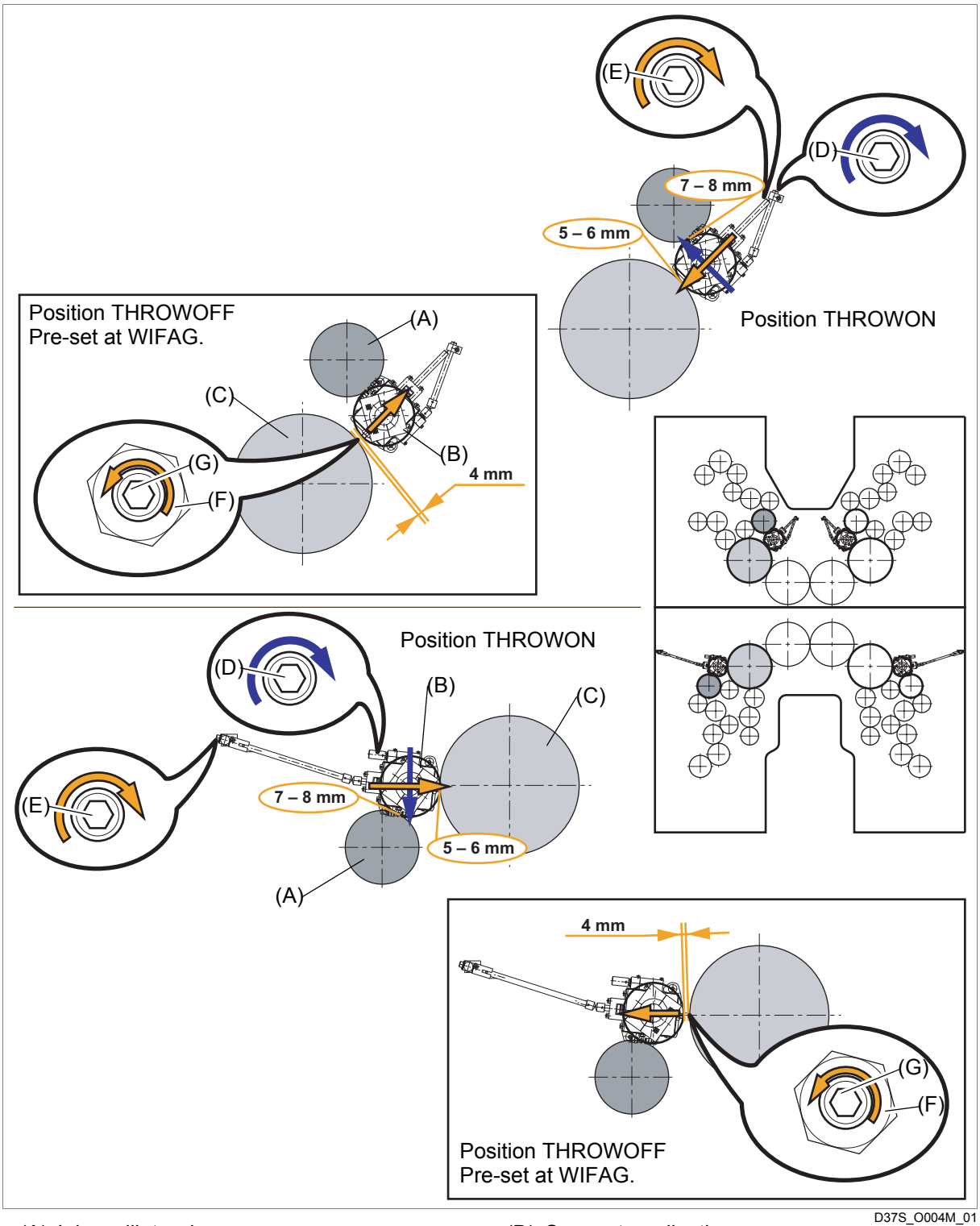

D37S_O004M_01

(A) Ink oscillator drum
(B) Ink form roller no. 2
(C) Plate cylinder
(D) Symmetry adjusting screw
(E) Stop ON adjusting screw
(F) Locknut
(G) Stop OFF adjusting screw

Set sheet for ink transfer roller no. 3

Transfer of the ink (Fig. 21):
Ink transfer roller no. 4 > *ink transfer roller no. 3* > ink oscillator drum

Set ink stripe width to the ink oscillator drum

1. Measure ink stripe width.
2. Using the adjusting screws stop ON (D), set ink stripe width 7-8 mm to ink oscillator drum (C).
3. Re-measure ink stripe width and correct if necessary.

> The roller is set.

Note

The ink stripe width 6-7 mm for ink transfer roller no. 4 (A) with its roller bearing is set later.

The symmetry (E) adjusting screws are not needed for this setting.
The symmetry (E) adjusting screws are needed only for large diameter fluctuations of the rubber rollers that cannot be compensated by the roller bearing of the ink transfer roller no. 4 (A). So that the parallelism to the ink oscillator drum (C) is maintained, the symmetry (E) adjusting screws are always adjusted on both sides with the same number of revolutions.

Fig. 21 Set ink transfer roller no. 3

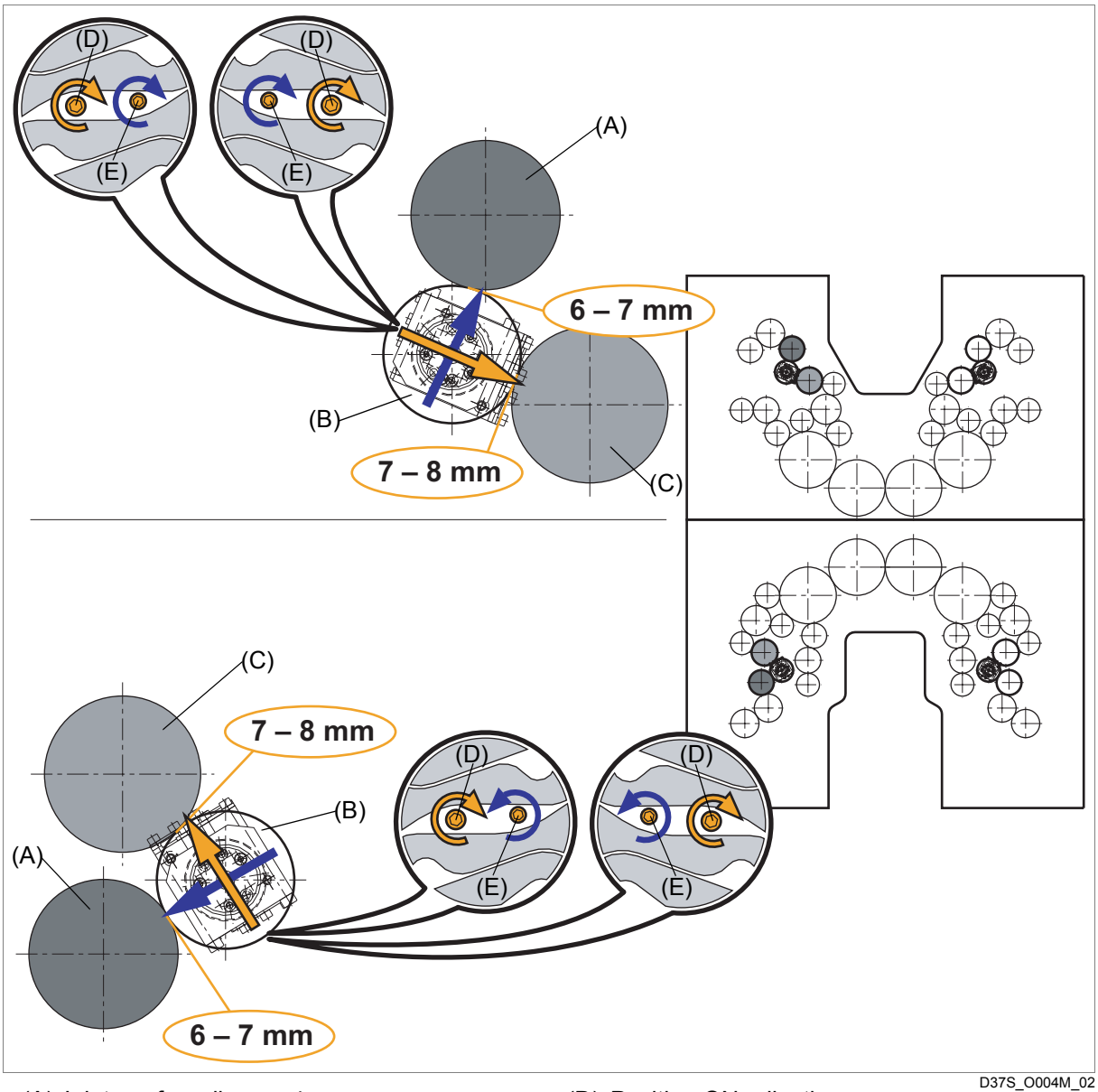

(A) Ink transfer roller no. 4
(B) Ink transfer roller no. 3
(C) Ink oscillator drum
(D) Position ON adjusting screw
(E) Symmetry adjusting screw

Set sheet for ink transfer roller no. 4

Transfer of the ink (Fig. 22):
Ink pickup roller > *ink transfer roller no. 4* > ink transfer roller no. 3

Set relation

1. Measure ink stripe widths.
2. Using the symmetry (E) adjusting screws, set the relation between the ink pickup roller (A) and the ink transfer roller no. 3 (C).

Note

The adjustment axis is exactly in the bisecting angle. Each adjustment of the Position ON (D) adjusting screws thus changes both ink stripe widths equally.

The rubber rollers in the upper and lower bridges have different lengths:

- Lower bridge = 1509 mm
- Upper bridge = 1559 mm

Set ink stripe widths

3. With the Position ON (D) adjusting screws, set both ink stripe widths.
4. Re-measure both ink stripe widths and correct if necessary.

> The roller is set.

Fig. 22 Set ink transfer roller no. 4

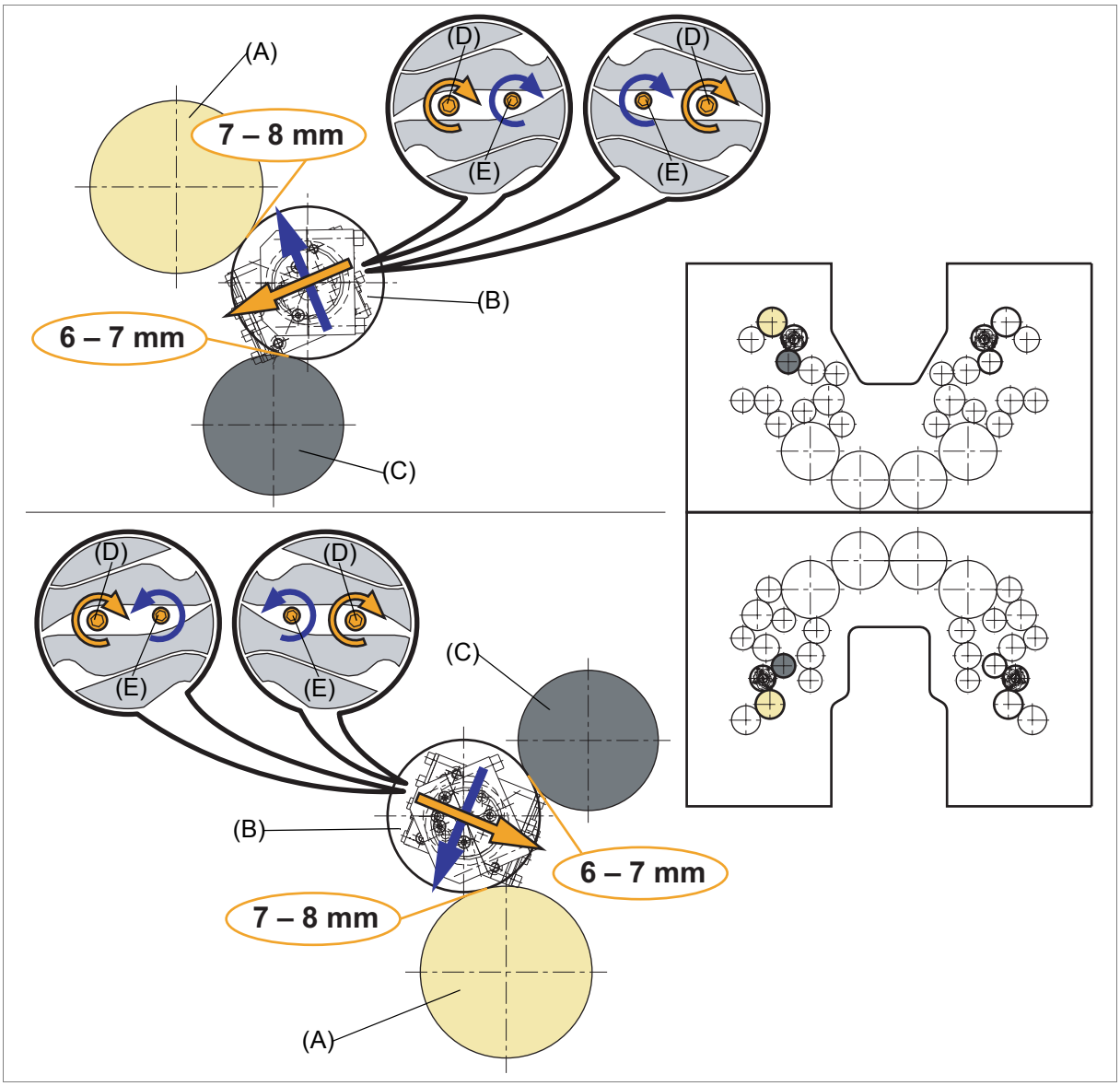

D37S_O004M_03

(A) Ink pickup roller
(B) Ink transfer roller no. 4
(C) Ink transfer roller no. 3
(D) Position ON adjusting screw
(E) Symmetry adjusting screw

Set sheet for ink transfer roller no. 5

Transfer of the ink (Fig. 23):
Ink oscillator drum > *ink transfer roller no. 5* > ink oscillator drum

Set relation

1. Measure ink stripe widths.
2. Using the symmetry (E) adjusting screws, set the relation between ink oscillator drums (A) and (C).

Note

The adjustment axis is exactly in the bisecting angle. Each adjustment of the Position ON (D) adjusting screws thus changes both ink stripe widths equally.

Set ink stripe widths

3. With the Position ON (D) adjusting screws, set both ink stripe widths.
4. Re-measure both ink stripe widths and correct if necessary.

> The roller is set.

Fig. 23 Set ink transfer roller no. 5

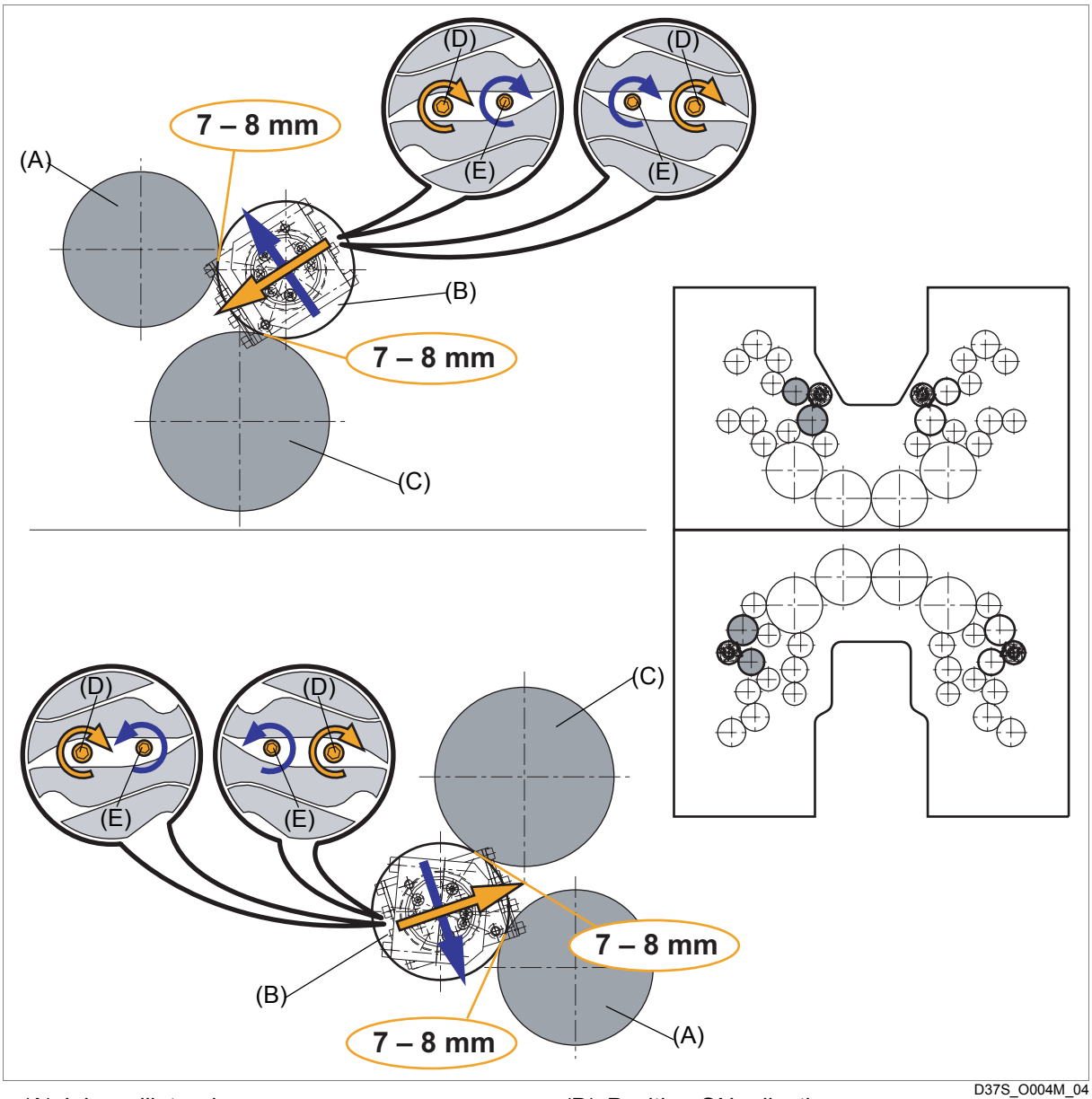

D37S_O004M_04

(A) Ink oscillator drum
(B) Ink transfer roller no. 5
(C) Ink oscillator drum
(D) Position ON adjusting screw
(E) Symmetry adjusting screw

Set sheet for dampening form roller no. 6

Transfer of the dampening solution (Fig. 24):
Water oscillator drum > *dampening form roller no. 6* > plate cylinder

Set position ON

1. Throwon rubber roller.
2. Measure ink stripe width.
3. Using the symmetry (D) adjusting screws, set ink stripe width 5-6 mm to the water oscillator drum (A).
4. Using the adjusting screws stop ON (E), set ink stripe width 6-7 mm to plate cylinder (C).

Note

If larger adjustments on the adjusting screws (D) and (E) are made, both ink stripe widths change! For this reason, at the end re-measure both ink stripe widths and correct if necessary.

5. Retract rubber roller.
6. Throwon rubber roller.
7. Re-measure both ink stripe widths and correct if necessary.

> The roller is set.

Set distance of thrown off dampening form roller no. 6 to plate cylinder

This distance (4 mm) is factory set. If required, this distance can be adjusted with the adjusting screw (G).

Fig. 24 Set dampening form roller no. 6

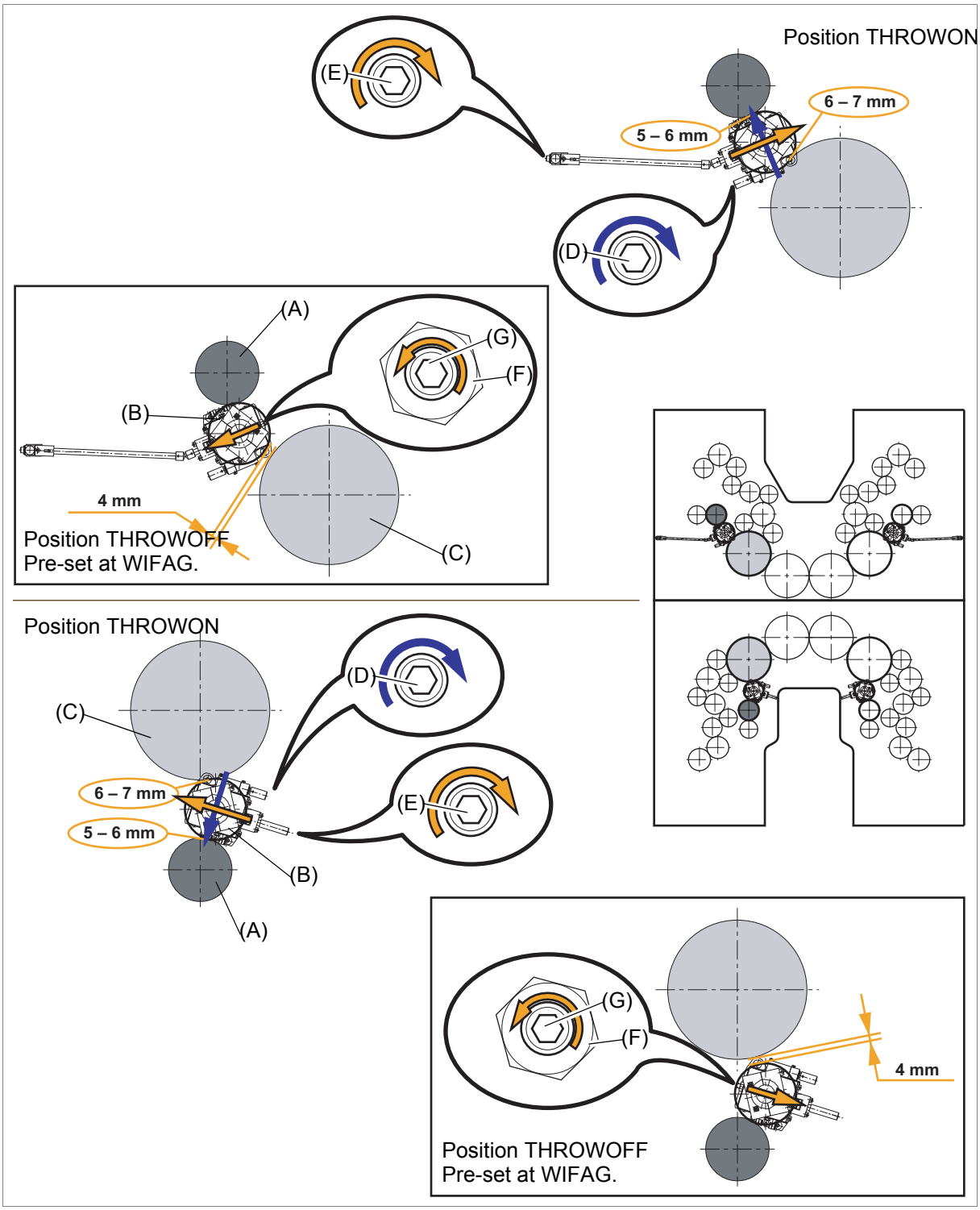

(A) Water oscillator drum
(B) Dampening form roller no. 7
(C) Plate cylinder
(D) Symmetry adjusting screw
(E) Stop ON adjusting screw
(F) Locknut
(G) Stop OFF adjusting screw

Set sheet for dampener transfer roller no. 7

Transfer of the dampening solution (Fig. 25):
Dampener transfer roller no. 7 > water oscillator drum > dampening form roller no. 6

Set ink stripe width to the water oscillator drum

1. Measure ink stripe width.
2. Using the adjusting screws position ON (D), set ink stripe width 5-6 mm to water oscillator drum (A).
3. Re-measure ink stripe width and correct if necessary.
4. Check the position of the spray dampening unit and adjust if necessary (Chapt. 4.1.2 Set spray dampening system position in Reg. 12 Dampening unit).

> The roller is set.

The symmetry (E) adjusting screws are not needed for this setting.
The symmetry (E) adjusting screws are needed only for large diameter fluctuations of the rubber rollers that cannot be compensated by the adjusting screws (D). So that the parallelism to the water oscillator drum (A) is maintained, the symmetry (E) adjusting screws are always adjusted on both sides with the same number of revolutions.

Fig. 25 Set dampener transfer roller no. 7

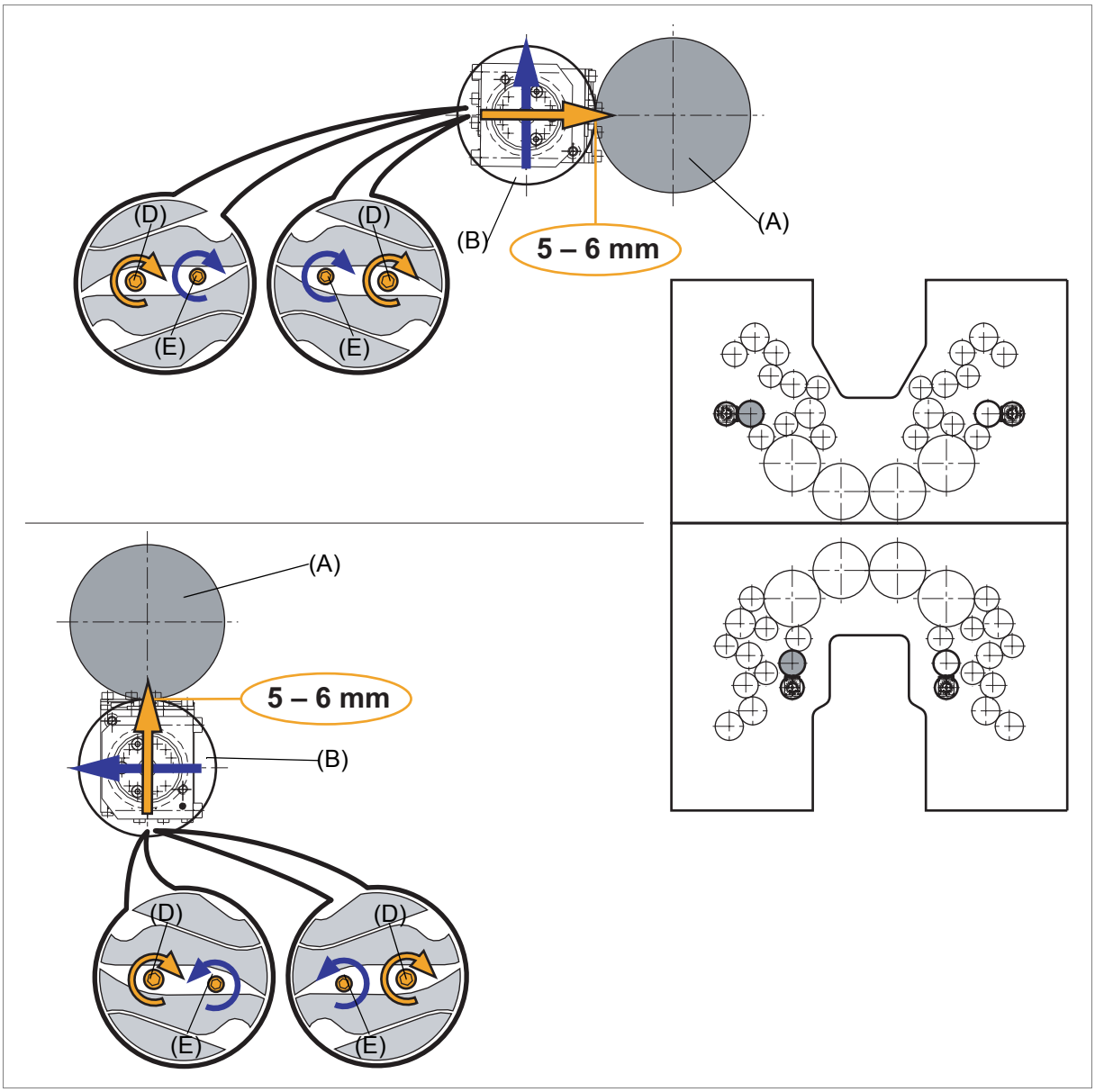

D37S_O004M_06

(A) Water oscillator drum
(B) Dampener transfer roller no. 8
(C) ----------
(D) Position ON adjusting screw
(E) Symmetry adjusting screw

4.2 Calibration

Note

No calibrations are necessary on this sub-function group.

4.3 Testing

Note

No tests are necessary on this sub-function group.

16 Plate cylinder

1 Overview **16.3**

2 Construction and function **16.5**
2.1 Plate tensioning device **16.6**
2.2 Sidelay register adjustment **16.7**
2.3 Sidelay register control **16.8**
2.4 Adjusting the circumferential register **16.9**

3 Replace components **16.10**
3.1 WIFAG article numbers **16.11**
3.2 Replacing the sidelay register drive **16.12**
3.3 Replacing leaf spring **16.15**

4 Basic settings **16.18**
4.1 Setting **16.19**
4.1.1 Set sidelay register adjustment 16.19
4.1.2 Set register cams 16.24
4.2 Calibration **16.31**
4.3 Testing **16.31**

1 Overview

Fig. 1 Overview of plate cylinder

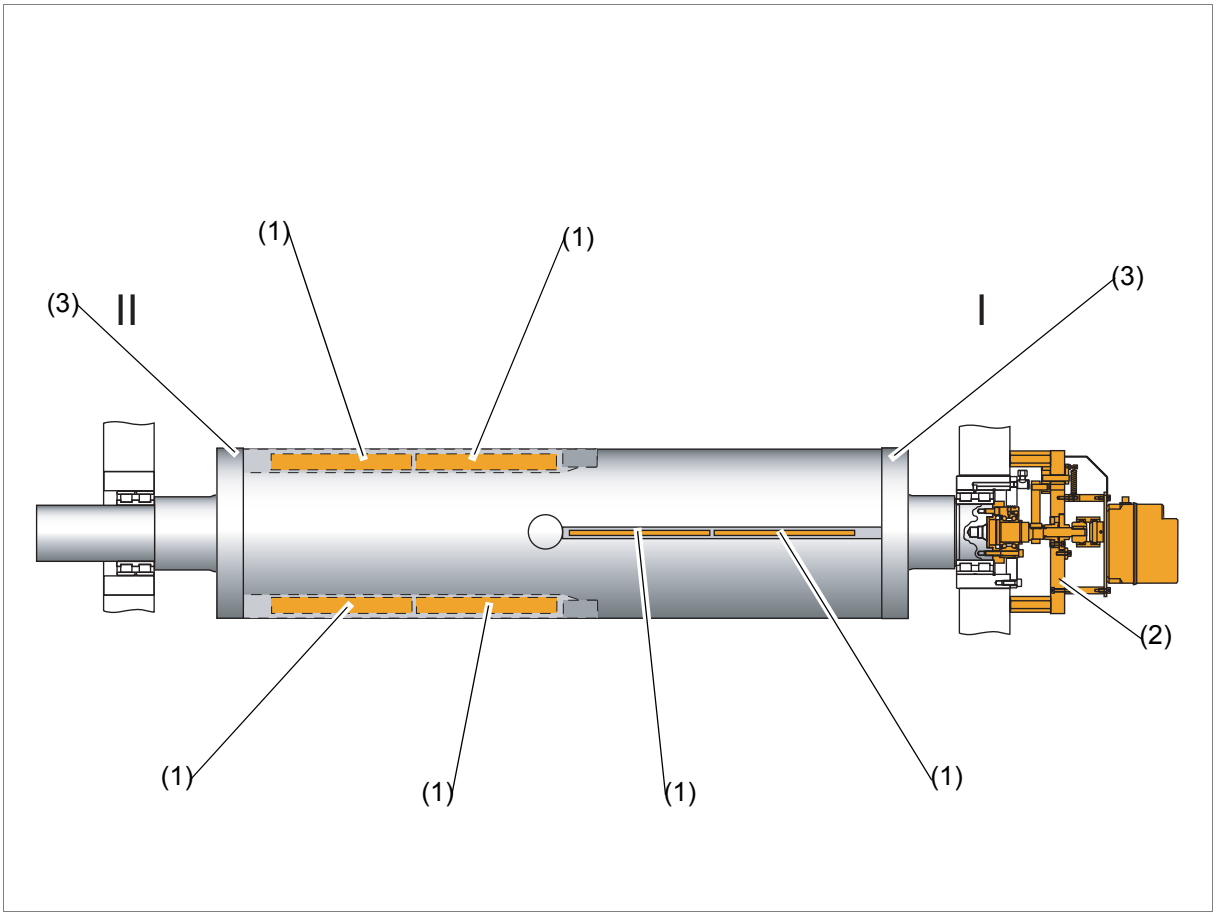

D47S_P001M

(1) Plate tensioning device (Chapt. 2.1 Plate tensioning device)

(2) Sidelay register adjustment (Chapt. 2.2 Sidelay register adjustment); (Chapt. 2.3 Sidelay register control)

(3) Bearer ring (Chapt. 2.4 printing throwon in Reg. 17 Blanket cylinder), (Chapt. 2.2 Bearer ring lubrication in Reg. 5 Lubrication)

Note

The designation of the cylinder lock-up slots (5); (6) refers to printing unit 1 with one inner dampening unit (Fig. 2). The work on the other printing units is identical; leading and trailing edge of lock-up slots and run commands are different due to the rotation direction of the plate and blanket cylinders.

Fig. 2 Lock-up slots designation (schematic diagram)

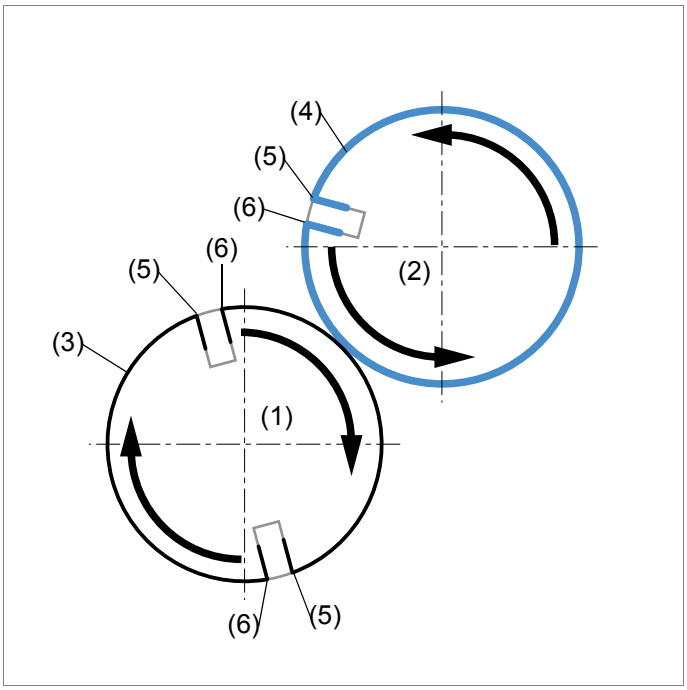

Dx73e_P002M

(1) Plate cylinder
(2) Blanket cylinder
(3) Printing plate
(4) Blanket
(5) Leading lock-up slot edge
(6) Trailing lock-up slot edge

2 Construction and function

Contents

This chapter contains the following information:

- Chapt. 2.1 Plate tensioning device
- Chapt. 2.2 Sidelay register adjustment
- Chapt. 2.3 Sidelay register control
- Chapt. 2.4 Adjusting the circumferential register

2.1 Plate tensioning device

With the plate tensioning devices, 4 two-page wide or 8 one-page wide printing plates can be locked up per plate cylinder (Fig. 3), (Fig. 4).

The printing plate (4) is hooked into the retaining lug (1), fastened to the register cam (2), and tensioned with the leaf spring (3).

Fig. 3 Plate tensioning device

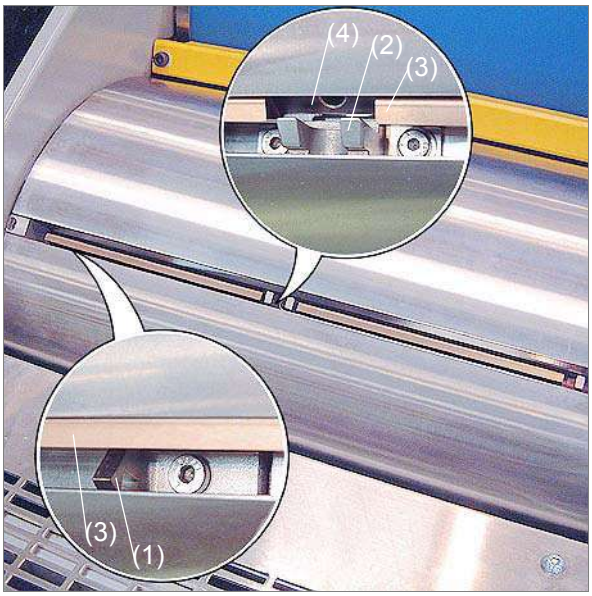

D_157_005_01

(1) Retaining lug
(2) Register cam
(3) Leaf spring
(4) Actuating element

Fig. 4 Section of plate cylinder lock-up slot

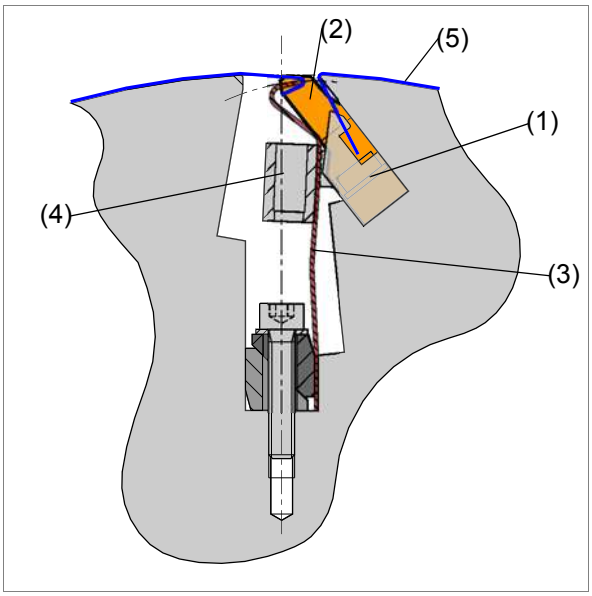

D37e_P003M

(1) Retaining lug
(2) Register cam
(3) Leaf spring
(4) Actuating element
(5) Printing plate

2.2 Sidelay register adjustment

The plate cylinder can be axially displaced with the sidelay register setting (Fig. 5).

The drive (1) transfers the rotary movement via the clutch (2) to the spindle (6). The spindle (6) transfers the axial movement via the ball bearing (4) to the plate cylinder (5). The axial play of the spindle (6) is counteracted by the locknut (7). The adjustment torque of the locknut (7) is 7 Nm.

The automatic displacement is limited by a software limit switch.
The manual displacement is limited by the mechanical stop (3).

Software limit switch: ± 1.5 mm
Mechanical stop: ± 1.94 mm

Fig. 5 Sidelay register displacement, view from side

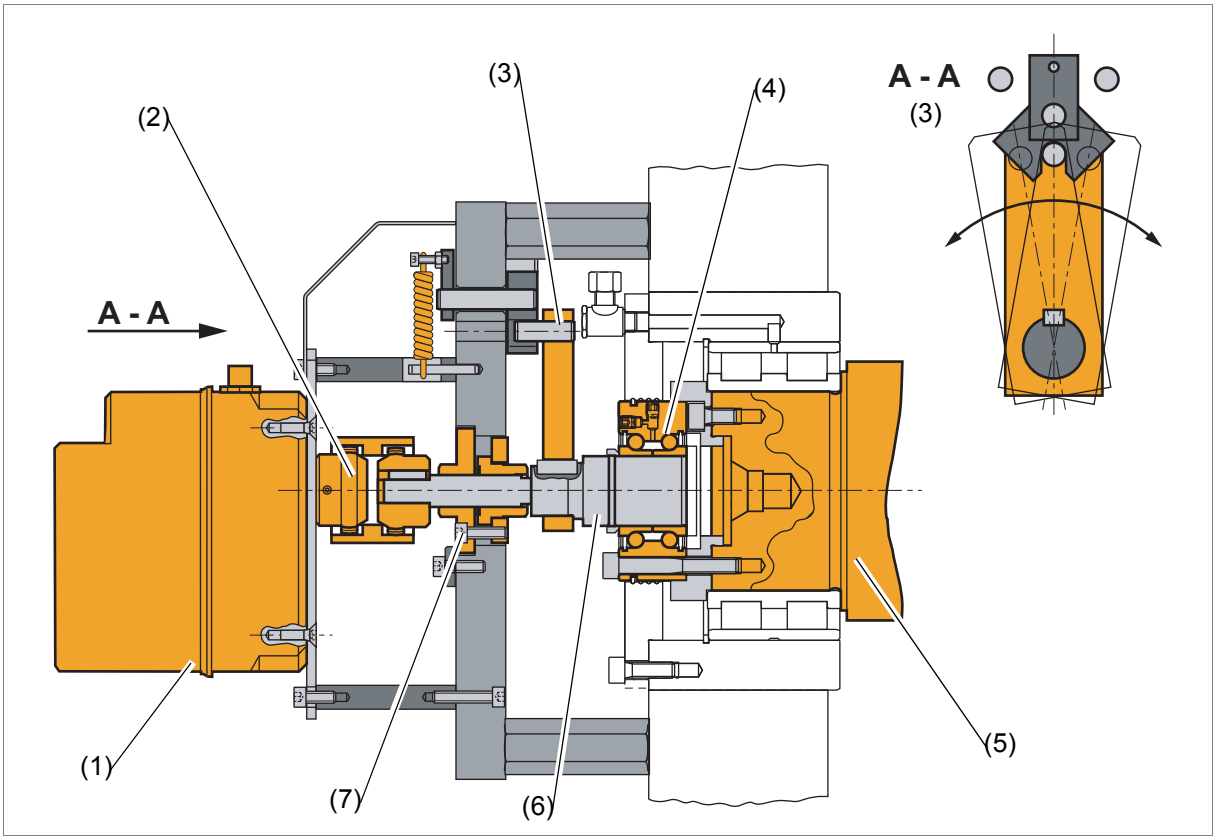

D37_K011M_03.

(1) drive
(2) coupling
(3) Mechanical stop
(4) Ball bearing
(5) Plate cylinder
(6) Spindle
(7) Locknut

In an emergency the sidelay register adjustment can be manually displaced using the attachment (1) (Fig. 6).

Fig. 6 Manually adjusting sidelay register

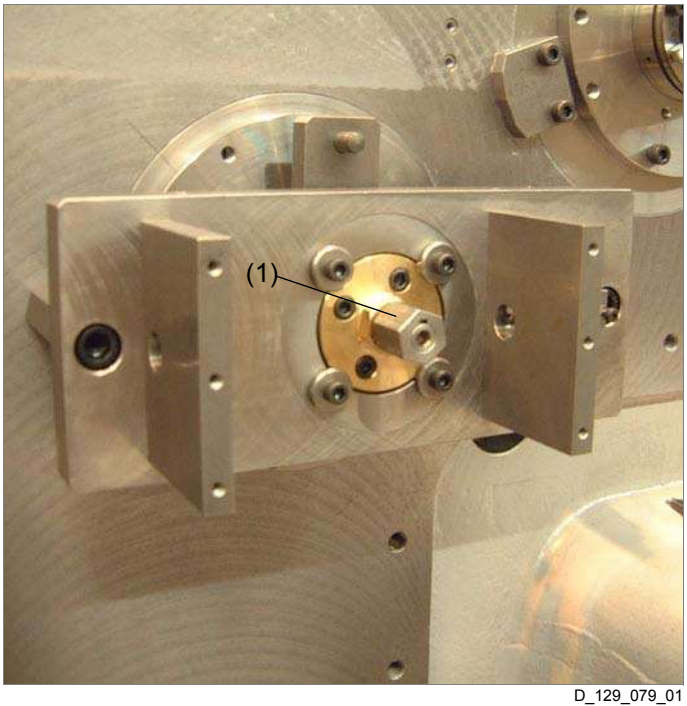

D_129_079_01

(1) Attachment

2.3 Sidelay register control

The sidelay register control is installed in the bridge boxes (+BK BU / +BK BO) (Chapt. 1 Overview in Reg. 7 Electrical and control systems).

The sidelay register adjustment is actuated via WAGO I/O.

Note

Further information about WAGO I/O is in Chapt. 2.4.3 WAGO I/O system in Reg. 7 Electrical and control systems in the *System* file.

2.4 Adjusting the circumferential register

The adjustment of the circumferential register is controlled by the printing couple drive.

Note

Information about the printing couple drive can be found in the following chapters:

- Chapt. 2.1 Printing couple drive in Reg. 13 Printing couple drive
- Chapt. 2.4 Drive control in Reg. 13 Printing couple drive

3 Replace components

Contents

This chapter contains the following information:

- Chapt. 3.1 WIFAG article numbers
- Chapt. 3.2 Replacing the sidelay register drive
- Chapt. 3.3 Replacing leaf spring

Specification

For safety reasons only the replacement work described in these operating instructions may be performed! All replacement work not described herein must be performed by qualified WIFAG personnel.

3.1 WIFAG article numbers

Tab. 1 Overview of components and accessories

Article	Obtainable only from WIFAG	Can be ordered from WIFAG
Plate cylinder	1416452 1416447	----------
Printing plate tool	1432914	----------
Setting gauge (register cams)	1421543	----------
Sidelay register adjustment	1329351	----------
Setting gauge (sidelay register adjustment)	A4-13015RO	----------
Attachment (sidelay register adjustment)	A4-12893RO	----------
Center pins (sidelay register drive)	A4-12319RO	----------
Pin for central position (side register adjustment)	A4-13156RO	----------

3.2 Replacing the sidelay register drive

Requirements

- Production group / function group at standstill
- Work on the electrical system may be performed only by specially trained **technicians**.
- Read Chapt. 8.9 Carrying out repairs in Reg. 2 Important for your safety in the *System* file.
- Cause of malfunction is known (sidelay register drive, electrical system, control system, mechanics)

Materials needed

- Allen key set
- Bearing puller for clutch pinion
- Center pins (sidelay register drive)
- 2 Allen screws M5 × 12
- Loctite 243
- Warning signs *Work is in progress!*
- Chapt. 4.1.1 Set sidelay register adjustment

⚠ WARNING	**Risk of injury!** **Risk of being trapped and crushed** by rotating axels and shafts! => De-allocate function group from the production group at the terminal and electrically disable (push the *SAFE-STOP* pushbutton). => Place *Work in progress!* warning signs on the corresponding terminals and control panels.

Replacing the sidelay register drive

1. Electrically isolate sidelay register drive (Chapt. 2.2 Replacing drives in Reg. 11 Electrical setting and commissioning instructions in the *System* file).
2. Loosen retaining screws (1) and remove cover (2) (Fig. 7).
3. Loosen retaining screws (3) and remove drive (4) with coupling union (5).
4. Loosen retaining screws (6) and remove drive (4) from the base plate (7).
5. Loosen setscrew (8).
6. Detach clutch pinion (9) and clean.

Preparing the sidelay register drive for installation

7. Fit clutch pinion (9) and tighten with setscrew (8).
8. Place drive (4) on the baseplate (7) and tighten with the retaining screws (6).
9. Insert the center pin (10) and tighten with the retaining screw.
10. Loosen the retaining screws (11) and remove with the centering sleeve.
11. Coat new retaining screws (11) with Loctite 243.
12. Screw in the retaining screws (11) with the centering sleeve (do not tighten).
13. Mount drive (4) with base plate (7) and slide clutch pinion (9) onto center pin (10) at the same time.
14. Align base plate (7) and tighten retaining screws (11).
15. Remove drive (4) with base plate (7).
16. Remove center pin (10).
17. Electrically connect sidelay register drive (1) (Chapt. 2.2 Replacing drives in Reg. 11 Electrical setting and commissioning instructions in the *System* file).

Setting the sidelay register adjustment

18. Setting the sidelay register adjustment (Chapt. 4.1.1 Set sidelay register adjustment).
19. Electrically enable function group with the *SAFE-STOP* pushbutton.
20. Remove *Work is in progress!* warning sign.

> The sidelay register drive is now replaced

Fig. 7 Replacing the sidelay register drive

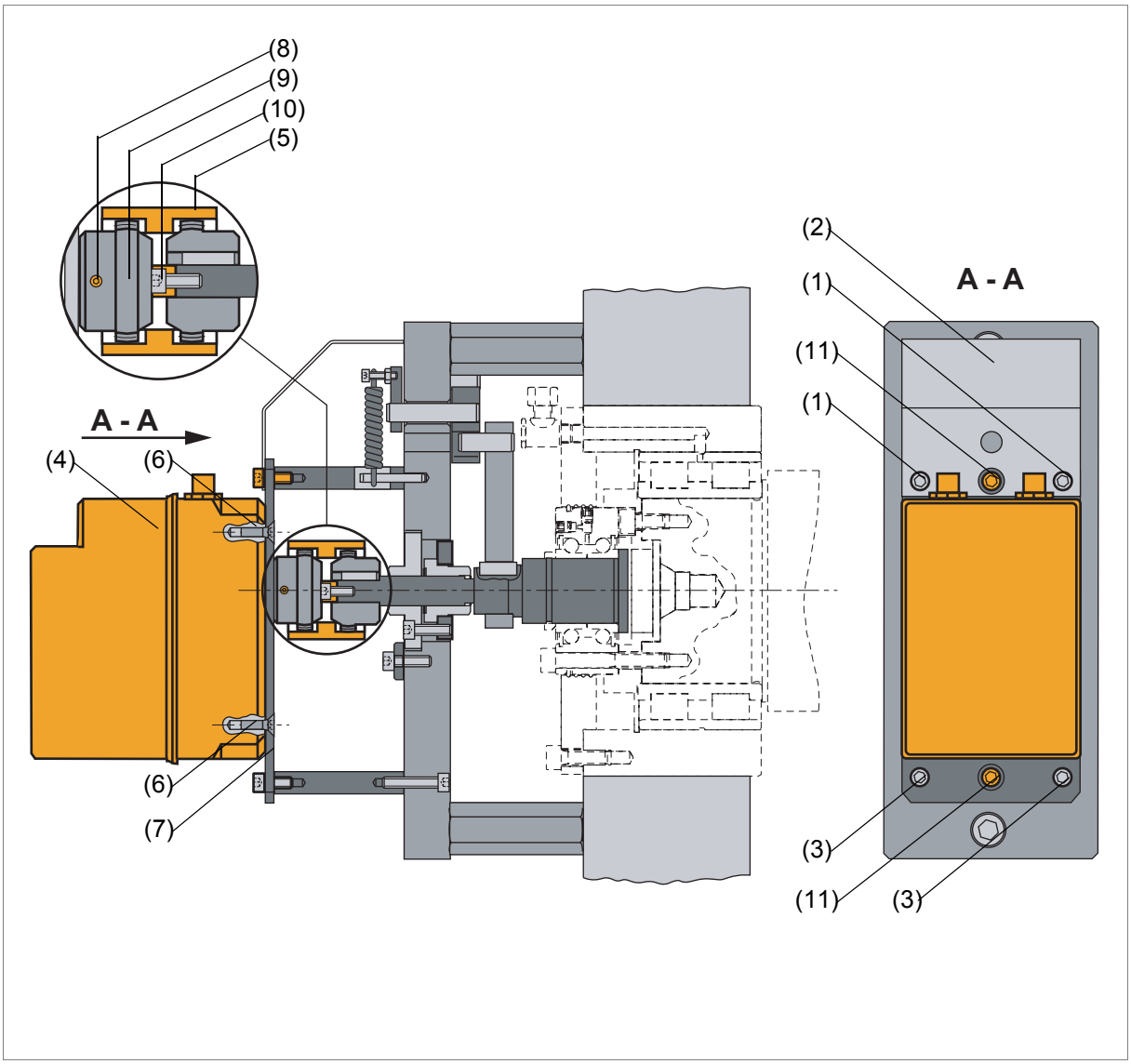

(1) Retaining screw for cover
(2) Cover
(3) Retaining screw for base plate
(4) drive
(5) Coupling union
(6) Retaining screw for drive
(7) Baseplate
(8) Setscrew
(9) Clutch pinion
(10) Center pin with retaining screw
(11) Retaining screw with centering sleeve

3.3 Replacing leaf spring

Requirements

- Production group / function group at standstill
- Read Chapt. 8.9 Carrying out repairs in Reg. 2 Important for your safety in the *System* file.
- No printing plates on the plate cylinder (Chapt. 6.1 Manually insert and lift out printing plates in Reg. 4 operation)
- Plate cylinder clean (Chapt. 4.5 Clean and conserve plate cylinder in Reg. 6 Maintenance)

Materials needed

- Soft cloth
- Cleaning agents approved by WIFAG
- Spray can with corrosion prevention No. 6 (Chapt. 1.3 Lubricant properties; Chapt. 1.4 Lubricant overview in Reg. 5 Lubrication)
- Resistant rubber gloves
- Allen key set
- Torque wrench with 3 mm and 4 mm Allen socket
- Loctite 243
- Warning signs *Work is in progress!*
- Chapt. 4.1.2 Set register cams

⚠ WARNING	**Risk of injury!** **Risk of being trapped and crushed** by rotating rollers and cylinders! => De-allocate function group from the production group at the terminal and electrically disable (push the *SAFE-STOP* pushbutton). => Place *Work in progress!* warning signs on the corresponding terminals and control panels.

⚠ CAUTION	**Machine damage!** Damage to the **system** due to corrosion! => Use only cleaning agents approved by WIFAG. => Mix the cleaning agent according to the instructions of the supplier. => Never use pure water for preliminary and after-washing.

Removing the register cams

1. Loosen retaining screw (1) and remove register cams (2) (Fig. 8).

Replacing leaf spring

2. Loosen retaining screws (3) and remove leaf spring (4).
3. Loosen retaining screws (6) and remove actuating element (7).
4. Clean clamp screws (6) and coat with Loctite 243.
5. Mount actuating element (7) on the new leaf spring (4) and tighten retaining screws (6) using a torque of 3 Nm .
6. Remove and clean locking wedge (5).
7. Clean plate cylinder lockup slot.
8. Spray plate cylinder lockup slot with corrosion prevention No. 6.
9. Instal locking wedge (5).
10. Insert leaf spring (4), align in the center and slide down to the lock-up slot bottom.
11. Tighten retaining screws (3) with a tightening torque of 6 Nm .

Installing register cams

12. Install register cams (2) and slightly tighten with retaining screws (1).

Set register cams

13. Set register cams (Chapt. 4.1.2 Set register cams).
14. Electrically enable function group with the *SAFE-STOP* pushbutton.
15. Remove *Work is in progress!* warning sign.

>The contact pressure roller is now replaced

Fig. 8 Replacing leaf spring

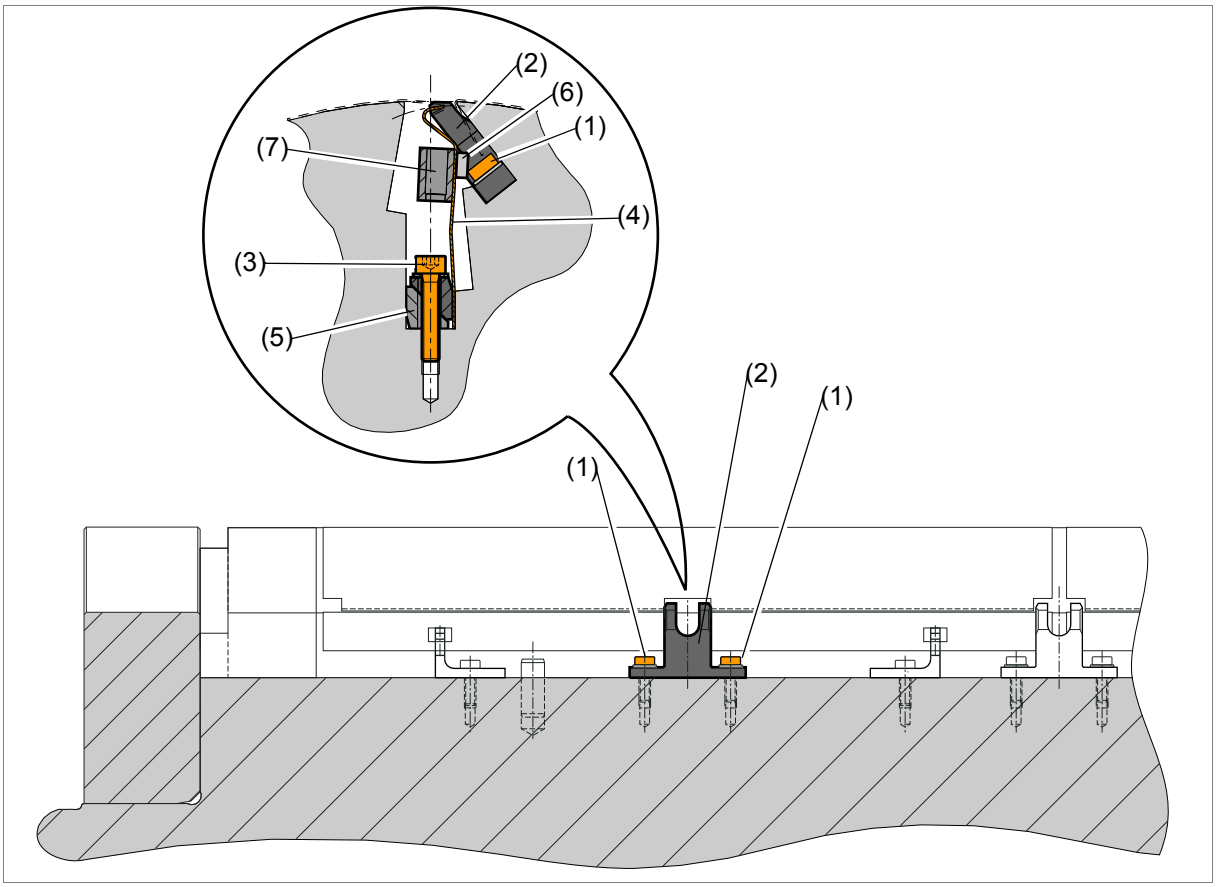

D37e_P003M_01

(1) Retaining screw
(2) Register cam
(3) Retaining screw
(4) Leaf spring
(5) Locking wedge
(6) Retaining screw
(7) Actuating element (for tensioning lever)

4 Basic settings

Contents

This chapter contains the following information:

- Chapt. 4.1 Setting
- Chapt. 4.2 Calibration
- Chapt. 4.3 Testing

Specification

For safety reasons only the adjustment work described in these operating instructions may be performed! All adjustment work not described herein must be performed by qualified WIFAG personnel.

4.1 Setting

4.1.1 Set sidelay register adjustment

Requirements

- Production group / function group at standstill
- Blanket cylinder is thrown off (Menu Printer \ Offset sequences \ Manual)
- Work on the electrical system may be performed only by specially trained **technicians**.
- Read Chapt. 8.9 Carrying out repairs in Reg. 2 Important for your safety in the *System* file.

Materials needed

- Allen key set
- Screwdriver no. 4
- Fork wrench size 24
- Pin for central position
- Setting gauge 110 mm
- Bearing puller for clutch pinion
- Attachment hex key 24 mm
- Warning signs *Work is in progress!*
- Chapt. 2.2 Sidelay register adjustment
- Reg. 3 Control elements

WARNING	
	Risk of injury! **Risk of being trapped and crushed** by rotating rollers and cylinders! => De-allocate function group from the production group at the terminal and electrically disable (push the *SAFE-STOP* pushbutton). => Place *Work in progress!* warning signs on the corresponding terminals and control panels.

Mechanically setting the sidelay register adjustment

1. Loosen retaining screws (1) and remove cover (2) (Fig. 9).
2. Loosen retaining screws (3) and remove drive (4) with coupling union (5).
3. Turn arrester lever (6) by hand to the zero-position (7).

If the arrester lever (6) cannot be turned by hand:

The threaded spindle or the bearing is jammed.

=> Pull off the clutch pinion (8) and fit the attachment (9).

=> Turn the threaded spindle carefully until the jammed element is released.

=> If the lever still cannot be turned by hand, contact WIFAG.

=> Fit the clutch pinion (8).

4. Slide pin (10) through the centre hole to the cylinder pin (11) (zero position); the tension spring (12) must not be removed.
5. Slacken retaining screws (13).

CAUTION	**Machine damage!**
	Damage to **plate cylinder bearing** due to excess load! => Slowly rotate the plate cylinder by hand while adjusting the sidelayregisters!

6. Turn locknut (14) counterclockwise until the setting gauge (1) (Fig. 10) can be used.
7. Turn locknut (14) clockwise until the setting gauge (1) (Fig. 10) can be moved without play between bearer ring (2) and wall side I (3).
8. Remove setting gauge (1).
9. Tighten retaining screws (13) (Fig. 9).
10. Use setting gauge (1) to check dimension 110 mm (Fig. 10).
    > The setting gauge (1) can be moved without play between bearer ring (2) and wall side I (3).
11. Fit drive (4) with coupling union (5) and tighten with retaining screws (3).
12. Mount the cover (2) and tighten the retaining screws (1).
13. Turn the clutch pinion (8) on the drive (4) until the coupling union (5) can be easily moved.
14. Remove holder (10) (Fig. 9).

Fig. 9 Set sidelay register adjustment

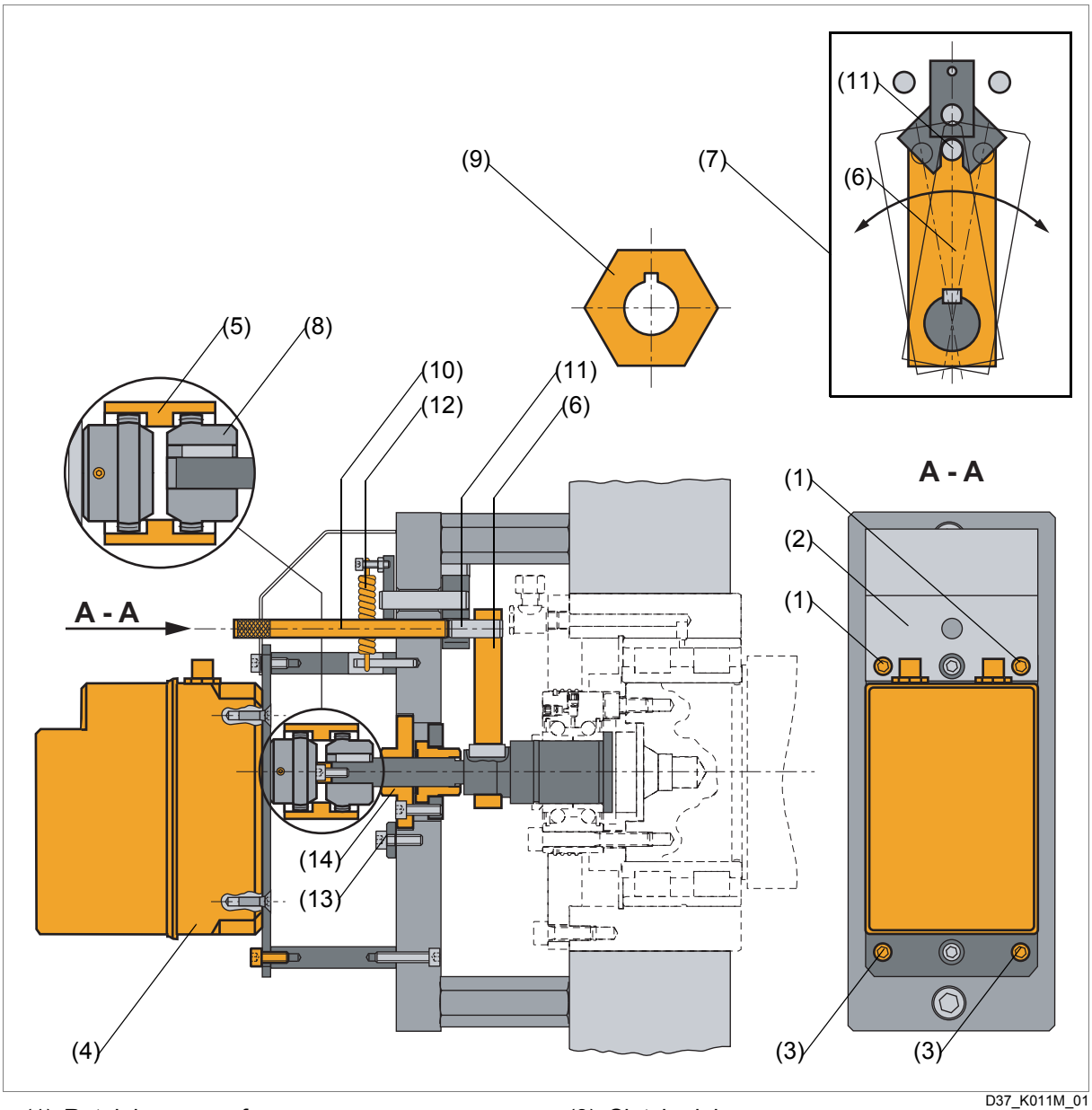

(1) Retaining screw for cover
(2) Cover
(3) Retaining screw for base plate
(4) drive
(5) Coupling union
(6) Arrester lever
(7) Zero position
(8) Clutch pinion
(9) Attachment
(10) Pin for central position
(11) Cylinder pin
(12) Tension spring
(13) Retaining screw for flange
(14) Locknut

Fig. 10 Central position, sidelay register

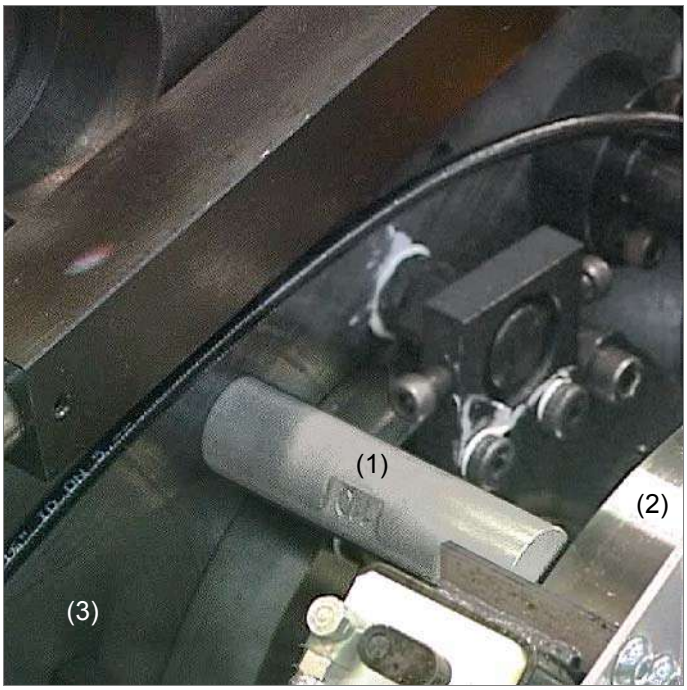

D_167_002_01

(1) Setting gauge 110 mm
(2) Bearer ring
(3) Wall side I

Electrically adjusting the sidelay register adjustment

15. Remove protective cap (1) (Fig. 11).
16. On the terminal, change to the Menu Test \ Sidelay register mask.
17. Turn potentiometer setting screw (2) until the actual value 0 mm is shown on the terminal.

CAUTION	**Machine damage!** Damage to **plate cylinder bearing** due to excess load! => Turn printing couple *DURING* adjustment of the sidelay register on the control panel with the pushbutton *INSERT PLATES* or *LIFT OUT PLATES* .

18. Electrically enable function group with the *SAFE-STOP* pushbutton.
19. Turn operating mode switch to position *MAKEREADY*.
20. With the *INSERT PLATES* pushbutton pressed down, simultaneously adjust the sidelay register on the terminal between the positions *MIN* (- 1.5 mm) and *MAX* (+ 1.5 mm).

Note

The travel direction (+ / -) of the sidelay register when operating on the control console depends on the printing side of the web (recto and verso). The print image is therefore always displaced from left to right (from - to +).
The travel direction (+ / -) of the sidelay register when operating on the terminal is always the same:

- Adjustment in minus direction = adjustment toward side I
- Adjustment in plus direction = adjustment toward side II

21. Press and hold the *INSERT PLATES* pushbutton and at the same time move the sidelay register to the *CENTER POSITION* (0 mm) on the terminal.
22. Use setting gauge (1) to check dimension 110 mm (Fig. 10).
    > The setting gauge (1) can be moved without play between bearer ring (2) and wall side I (3).
23. Remove setting gauge (1).
24. Turn operating mode switch to position *OPERATION*.
25. Remove *Work is in progress!* warning sign.
    > The sidelay register adjustment is set

Fig. 11 Set the potentiometer

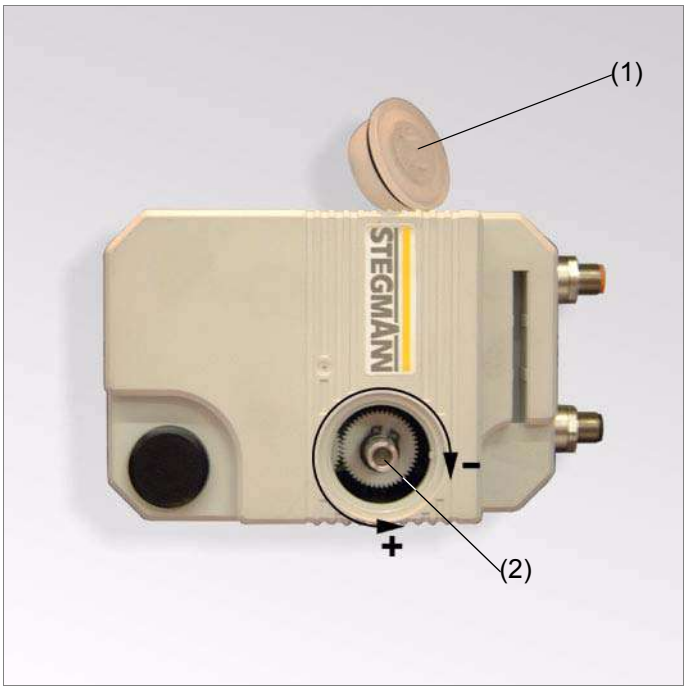

D_129_092_01

(1) Protective cap
(2) Adjusting screw

4.1.2 Set register cams

Note

Setting the register cams refers to the sidelay register adjustment.

Requirements

- Production group / function group at a standstill
- No printing plates on the plate cylinder
- Plate cylinder clean (Chapt. 4.5 Clean and conserve plate cylinder in Reg. 6 Maintenance)
- Plate tensioning device clean (Chapt. 4.23 Clean plate tensioning device in Reg. 6 Maintenance)

Materials needed

- Hexagon key set
- Setting gauge (WIFAG drawing no. 1421543)
- Cleaning agent (product must be approved by WIFAG!)
- Cleaning cloth
- Warning signs *Work is in progress!*

⚠ WARNING	**Exposed, rotating rollers and cylinders!** Risk of injury due to pulling in, catching and crushing! => Turn operating mode switch to position *MAKEREADY*. => Actuate the *SAFE-STOP* pushbutton. => Place the *Work is in progress!* warning sign.

ATTENTION	**Aggressive cleaning agent!** Damage to components due to corrosion! => Use only cleaning agents approved by WIFAG. => Mix the cleaning agent according to the instructions of the supplier. => Never use pure water for preliminary and after-washing.

Checking optical measuring system

Specification

The optical measuring system has been set in the factory. The optical measuring system may be set only by trained and qualified personnel!

1. Clean contact surfaces on setting gauge (1) and optical measuring system (2) (Fig. 12).

> The surface on the stop (11) is flat and shows no signs of damage.

If the surface on the stop (11) is not flat or is damaged:

=> Loosen terminal screws (12), turn over the stop (11) and tighten the terminal screws again.

2. Electrically connect the optical measuring system (2).
3. Carefully place the optical measuring system (1) on the setting gauge (2).
4. Push scale (10) and optical measuring system (2) to the stop (11) (press optical measuring system (2) to the left and to the front) and check the setting.
5. If necessary, adjust the focus on the measuring scale (7) on adjustment ring A (3).

> The measuring scale (7) is at a 90° angle to the edge of the setting gauge (8).

> The edge of the setting gauge (8) is exactly in the middle of the measuring scale (7).

If the measuring scale (7) is slanted to the edge of the setting gauge (8):

=> Turn adjustment ring B (6) downward to the stop.

=> Loosen terminal screw to the adjustment ring B (6), turn microscope accordingly and retighten terminal screw.

If the edge of the setting gauge (8) is not in the center of the measuring scale (7):

=> Adjust position of the measuring scale (7) with the adjusting screws (4).

If the difference is too great and cannot be adjusted with the adjusting screws (4):

=> Loosen terminal screws (9), move measuring scale (10) accordingly and retighten terminal screws.

> The optical measuring system is checked and adjusted.

Fig. 12 Checking optical measuring system

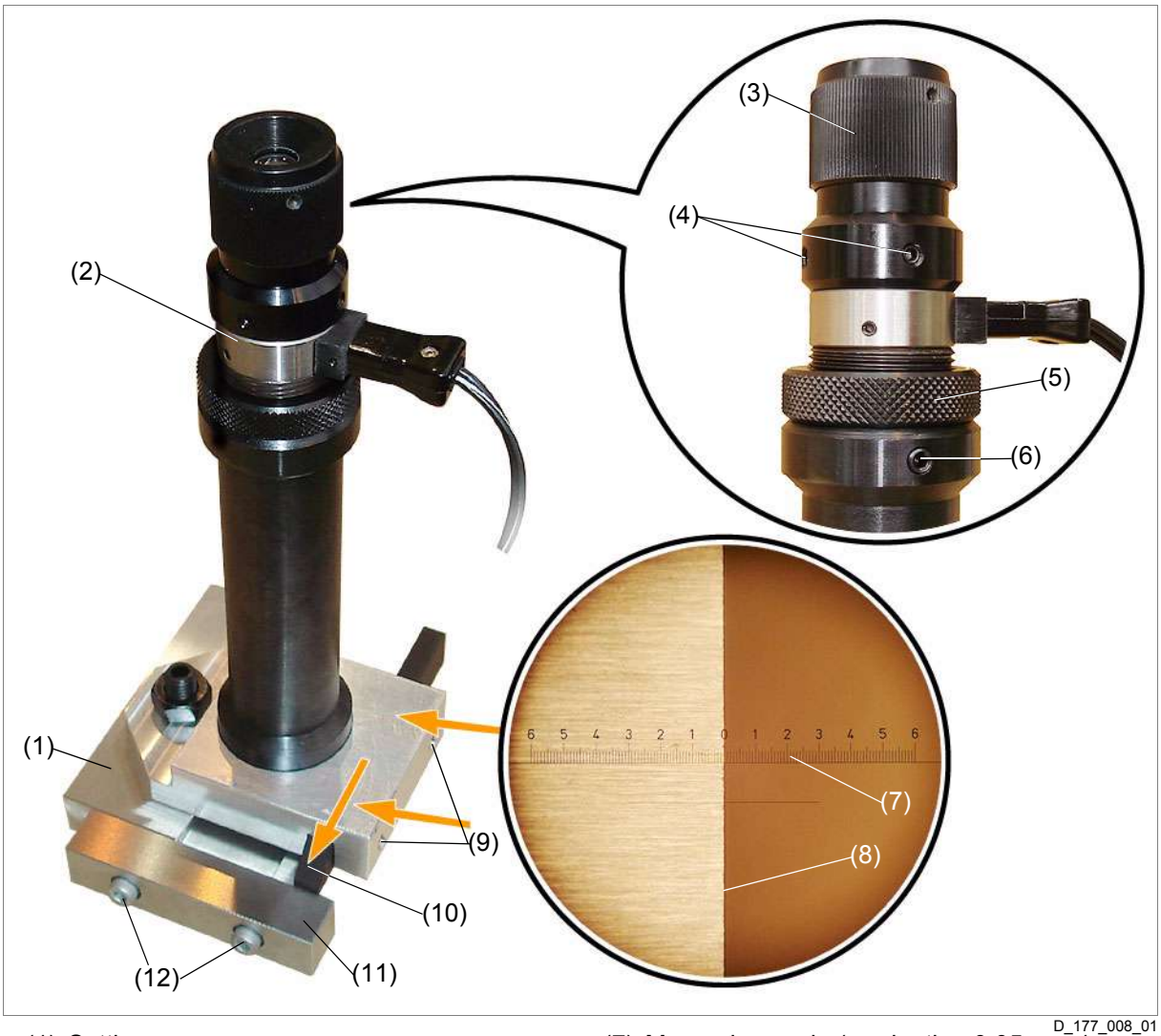

(1) Setting gauge
(2) Optical measuring system
(3) Adjustment ring A *(focus on measuring scale)*
(4) Adjusting screw *(measuring scale fine adjustment)*
(5) Adjustment ring B *(focus on object)*
(Turn only when absolutely necessary and only after loosening the terminal screw!)
(6) Terminal screw to adjustment ring B
(Loosen only when absolutely necessary!)
(7) Measuring scale (graduation 0.05 mm / 0.50 mm)
(8) Edge of the setting gauge
(9) Terminal screw to scale
(Loosen only when absolutely necessary!)
(10) Rule
(11) Setting gauge stop
(12) Terminal screw to stop

Set register cams

6. Clean contact surfaces on plate cylinder (5) and optical measuring system (4) (Fig. 14).
7. Electrically connect the optical measuring system (4).
8. Slacken terminal screw (1) and then slightly retighten so that the register cam (2) can be moved by hand.
9. Carefully place the optical measuring system (4) between leaf spring and register cam (2) on the plate cylinder (5).
10. Push optical measuring system (4) and scale (3) against the register cam (2).
11. Push register cam (2) to the desired value while lightly pulling the optical measuring system (2) to the rear and pressing against the register cam (2).

> The view through the microscope is a mirrored image.

> If the contrast is insufficient, color the marking with a felt pen and remove the ink on the plate cylinder surface with a polishing cloth.

> A small mark on the measuring scale (7) is equal to 0.05 mm.

12. Tighten retaining screws (1) with a tightening torque of 5-6 Nm.
13. Copy the check sheet (Tab. 3 Blank check sheet for register cam settings) in the operating instructions and enter the set values as in the example (Tab. 2 Example of check sheet for register cam setting).
14. Electrically enable function group with the *SAFE-STOP* pushbutton.
15. Remove *Work is in progress!* warning sign.

> The register cams are set.

Fig. 13 Reading the scale (examples)

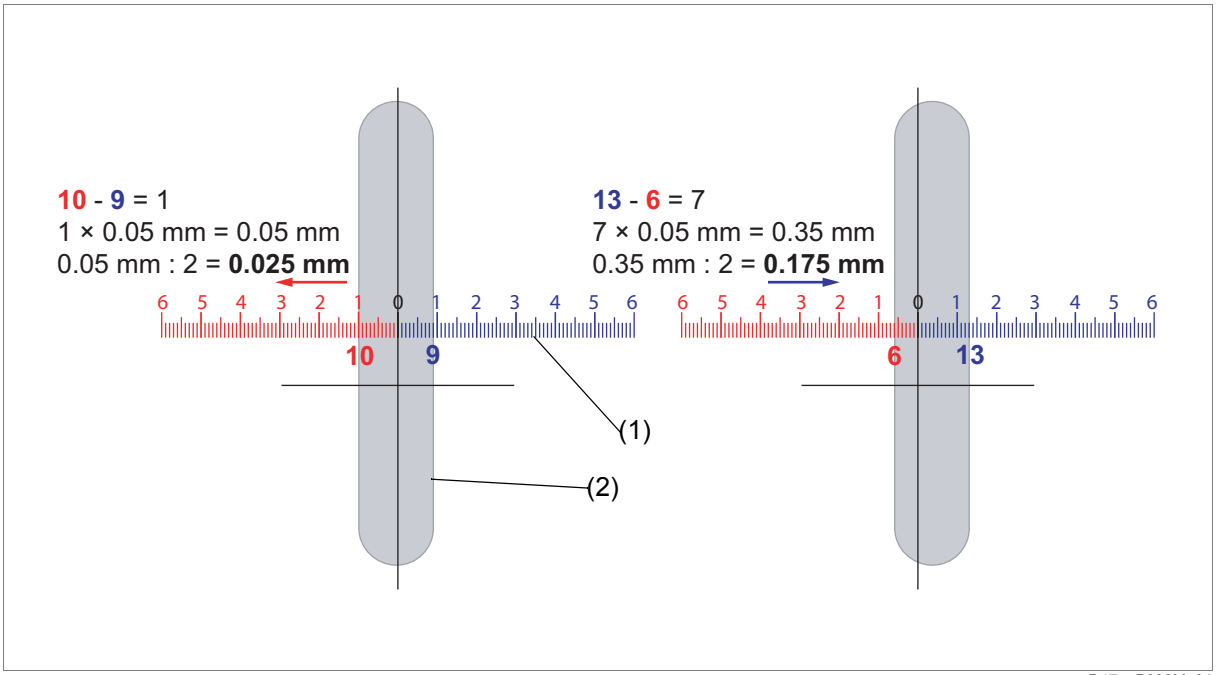

(1) Measuring scale (graduation 0.05 mm / 0.50 mm)

(2) Marking on the plate cylinder

Fig. 14 Set register cams

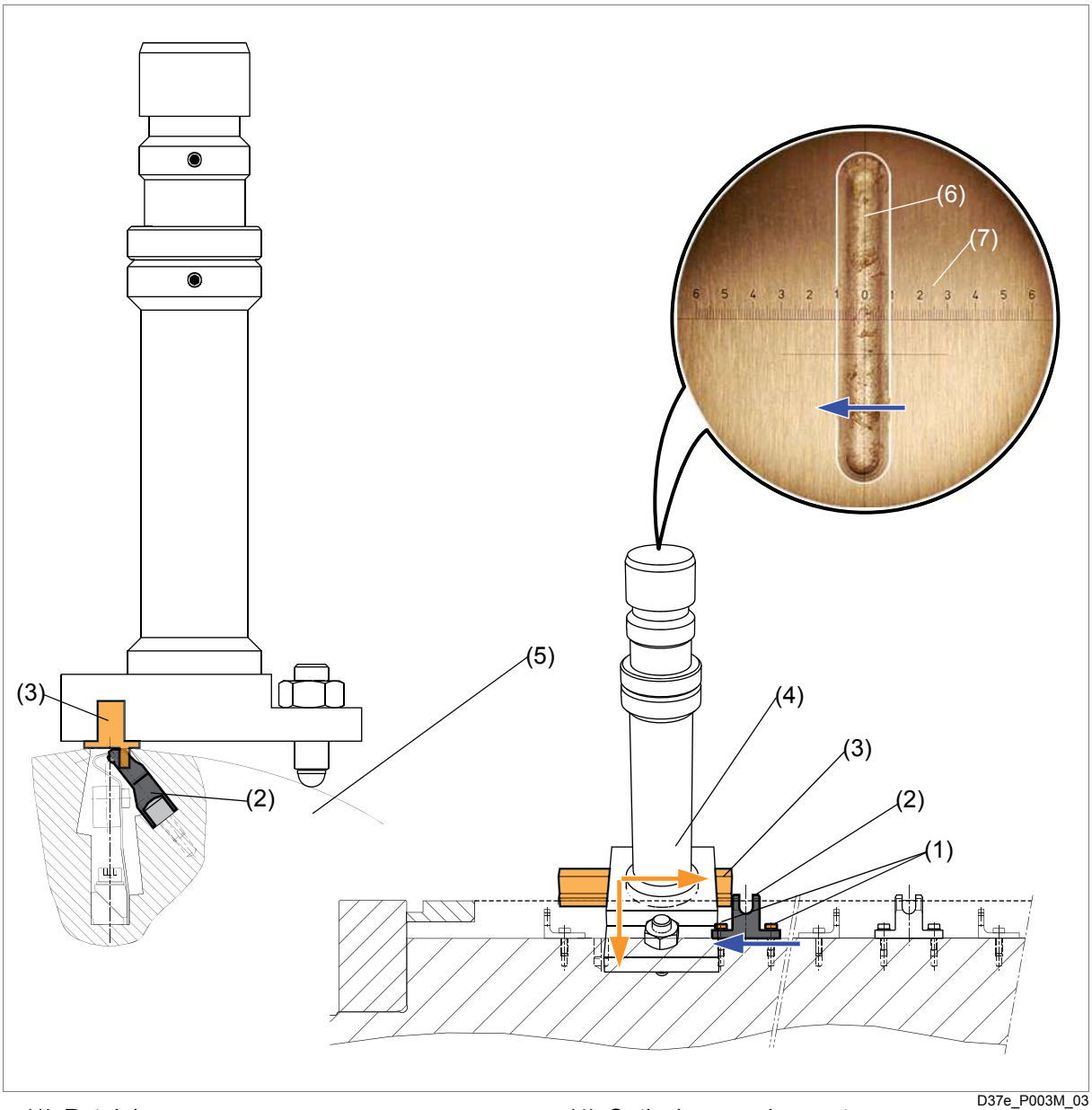

D37e_P003M_03

(1) Retaining screws
Torque 5-6 Nm

(2) Register cam

(3) Rule

(4) Optical measuring system

(5) Plate cylinder

(6) Marking on the plate cylinder

(7) Measuring scale (graduation 0.05 mm / 0.50 mm)

Check sheet for register cam setting

Tab. 2 Example of check sheet for register cam setting

Bridge no. (ASO code)	Plate cylinder zones	Remarks
0106	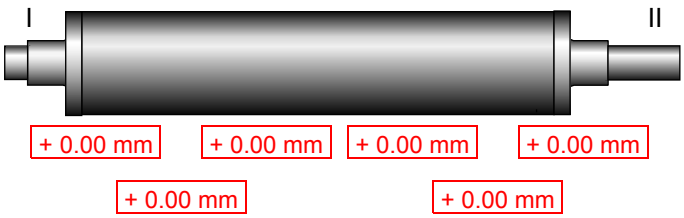	Setting Printing tower No.1
0105	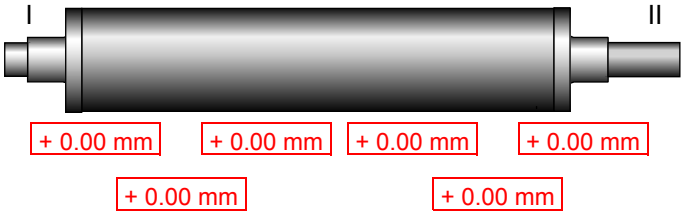	
0104	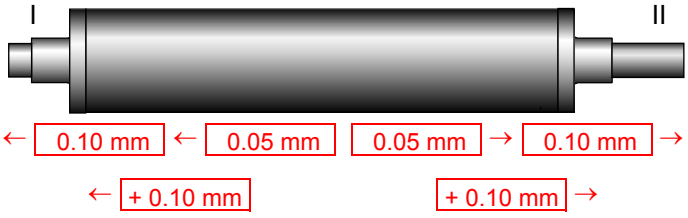	
0103	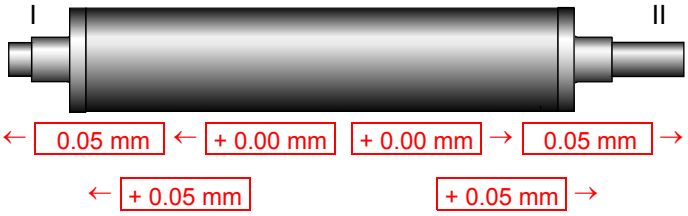	
0102	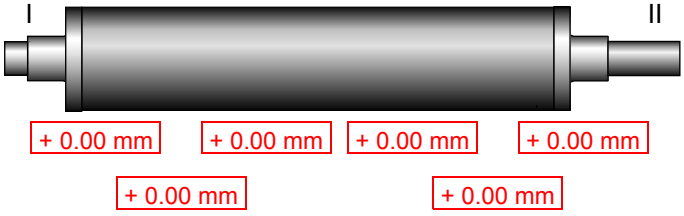	
0101	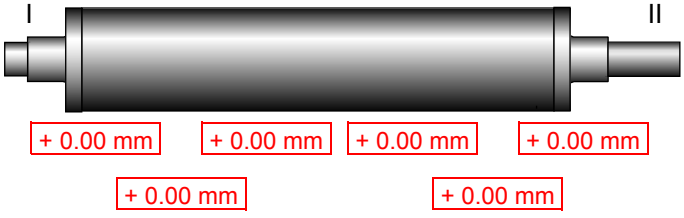	

Tab. 3 Blank check sheet for register cam settings

Bridge No. (ASO code)	Plate cylinder zones	Remarks
	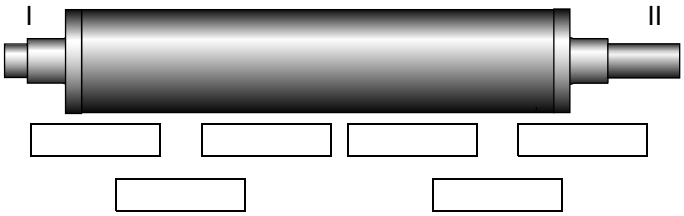	
	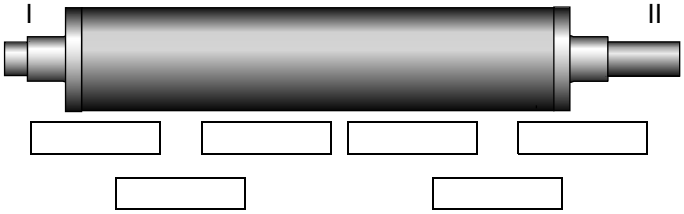	
	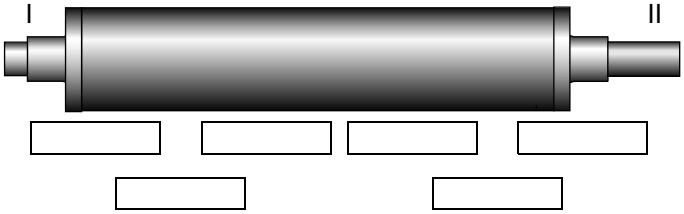	
	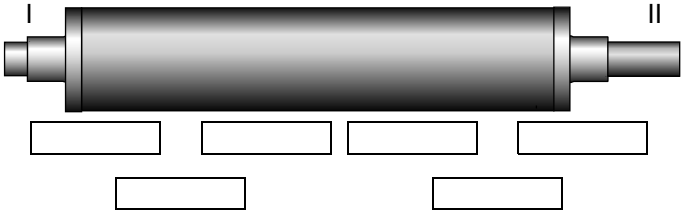	
	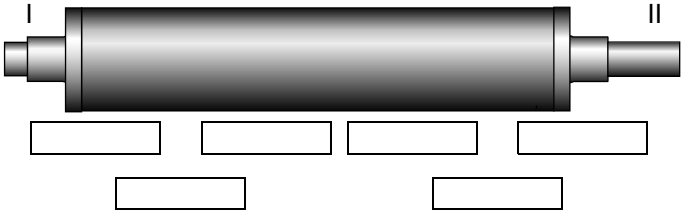	
	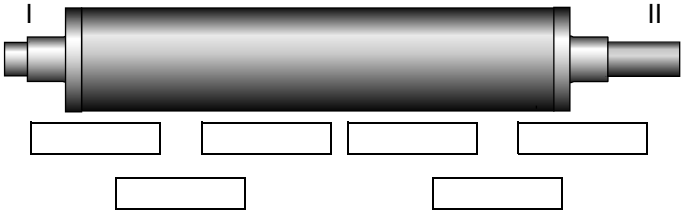	

4.2 Calibration

Note

No calibrations are necessary on this sub-function group.

4.3 Testing

Note

No tests are necessary on this sub-function group.

17 Blanket cylinder

1 Overview 17.3

2 Construction and function 17.5
2.1 Rubber blanket tensioning device 17.6
2.2 Useable blankets 17.7
2.3 Oversize blankets and printing plates 17.7
2.4 printing throwon 17.9

3 Replacing components 17.11
3.1 WIFAG article numbers 17.12
3.2 Replace rubber blankets / rubber blanket underlays 17.13
3.3 Replacing tightening screw 17.23

4 Basic settings 17.26
4.1 Setting 17.26
4.2 Calibration 17.26
4.3 Testing 17.26

1 Overview

Fig. 1 Overview of blanket cylinder

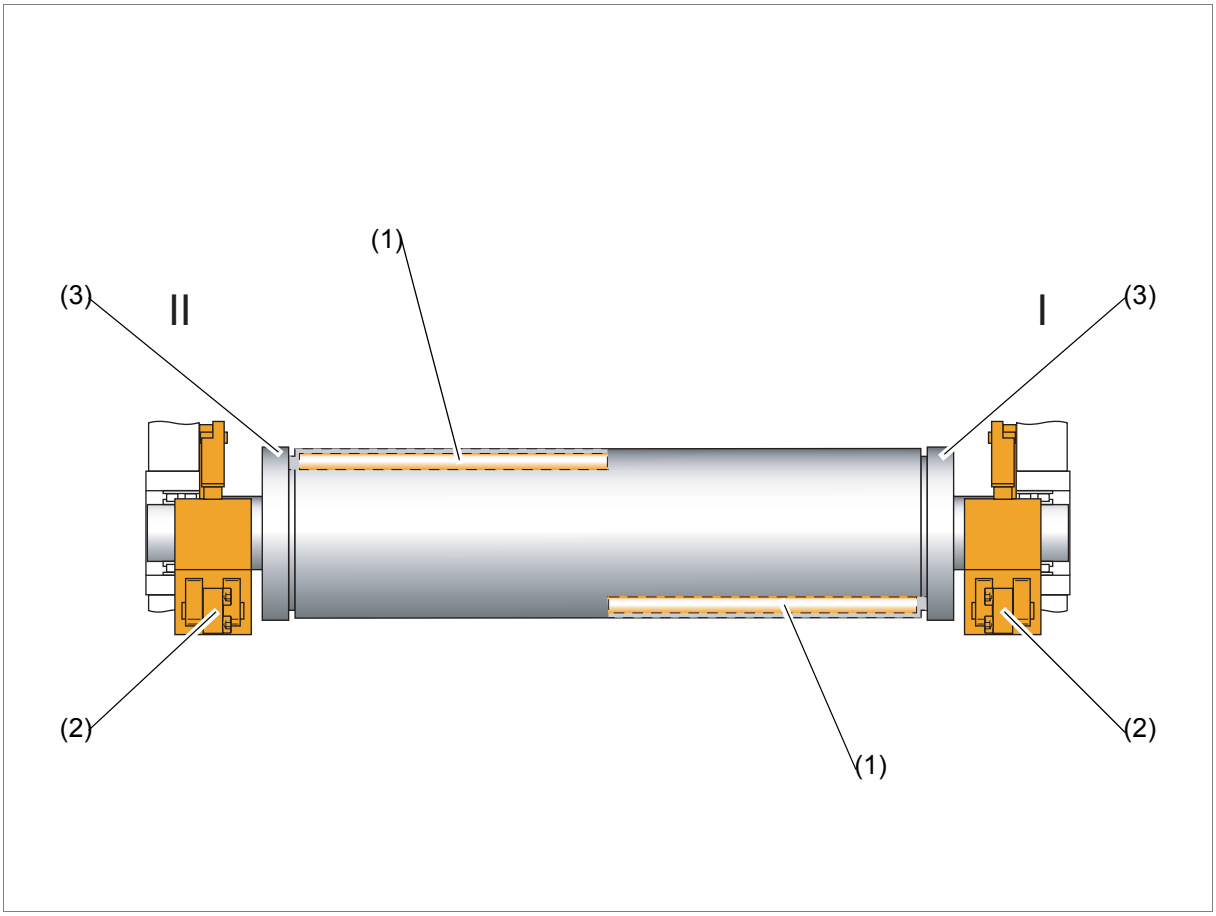

D37e_Q001M

(1) Rubber blanket tensioning device (Chap. 2.1 Rubber blanket tensioning device)

(2) Impression throwon (Chap. 2.4 printing throwon)

(3) Bearer ring (Chap. 2.4 printing throwon), (Chap. 1.1.2 Bearer ring lubrication in the Index 5 Lubrication)

Note

The designation of the cylinder lock-up slots (5); (6) refers to printing unit 1 with one inner dampening unit (Fig. 2). The work on the other printing units is identical; leading and trailing edge of lock-up slots and run commands are different due to the rotation direction of the plate and blanket cylinders.

Fig. 2 Lock-up slots designation (schematic diagram)

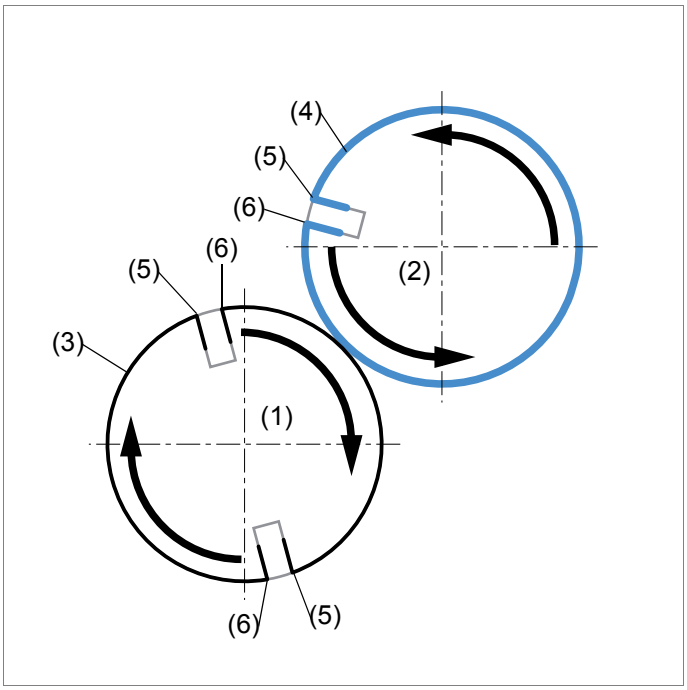

Dx73e_P002M

(1) Plate cylinder
(2) Blanket cylinder
(3) Printing plate
(4) Blanket
(5) Leading lock-up slot edge
(6) Trailing lock-up slot edge

2 Construction and function

Contents

This chapter contains the following information:

- Chap. 2.1 Rubber blanket tensioning device
- Chap. 2.2 Useable blankets
- Chap. 2.3 Oversize blankets and printing plates
- Chap. 2.4 printing throwon

2.1 Rubber blanket tensioning device

Two rubber blankets (4) per blanket cylinder are tensioned with the rubber blanket tensioning devices (Fig. 3).

The trailing lock-up bar (5) is hooked into the slot. The leading lock-up bar (6) is hooked into the tension rod (2).
Turning the tightening screw (1) turns the tension rod (2), and the rubber blanket (4) is tensioned.

Fig. 3 Rubber blanket tensioning device

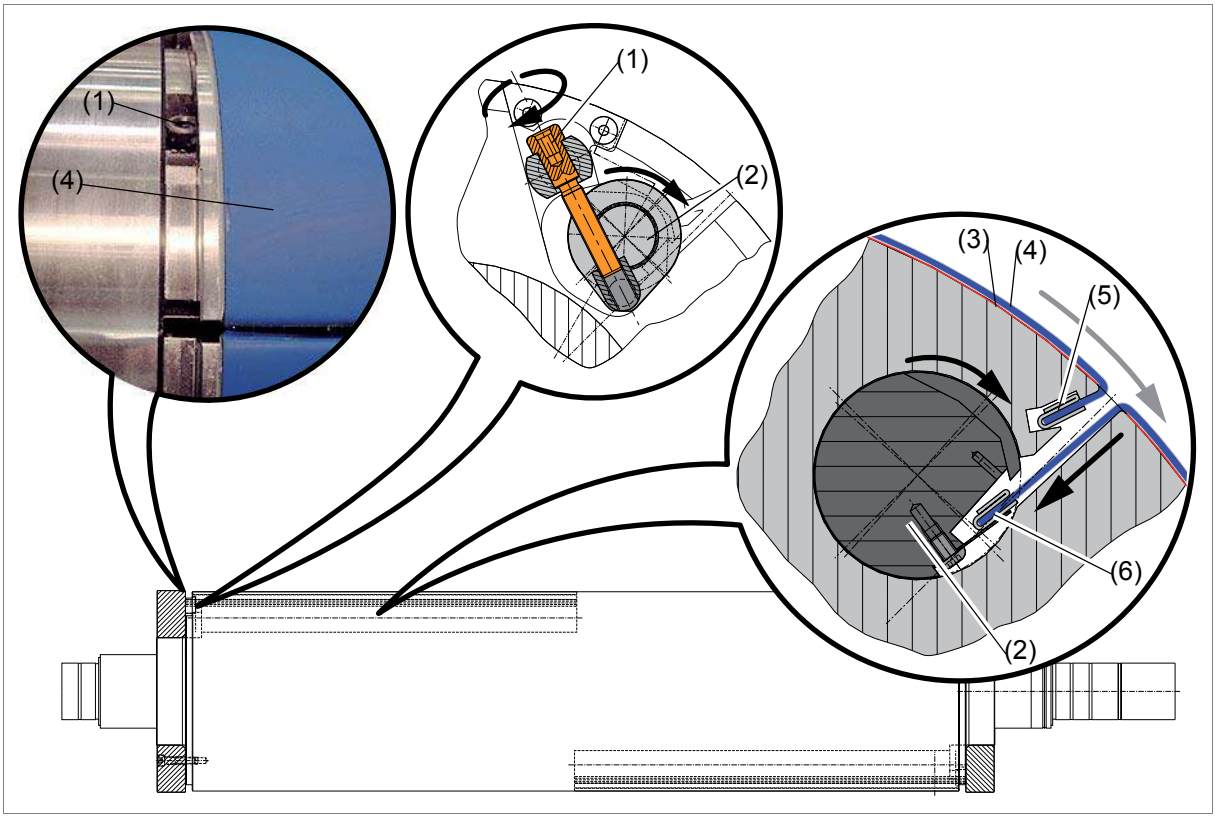

D37e_Q002M

(1) Tensioning screw
(2) Tension rod
(3) Blanket underlay
(4) Blanket
(5) Leading lock-up bar
(6) Trailing lock-up bar

2.2 Useable blankets

Only use compressible blankets with a thickness of 1.96 ± 0.015 mm (ISO 12636 / DIN 16621).

The blanket manufacturer is obliged to observe all the specifications in drawings no. 1421014 / 1421013. The blanket drawings can be found in the *Spare parts drawings* file.

2.3 Oversize blankets and printing plates

The necessary pressure ratios result from the oversize of the printing plates over the bearer rings of the plate cylinders, the oversize of the blankets over the bearer rings of the blanket cylinder, and the paper thickness.

The oversizes below (Fig. 4) (Fig. 5) refer to the system's original equipment at the factory. The original equipment (blanket and underlay types) is selected on the basis of good results with the printing quality and paper feed response.

The type and properties of the blankets influence the printing quality and the paper feed response. For this reason it may be necessary to adjust the underlays when changing the blanket type.

Regulation

The following points must be observed to achieve the optimum printing quality and paper feed response with our original equipment:

- Only use compressible blankets with a thickness of 1.96 ± 0.015 mm.
- Only use **one** blanket type by the same manufacturer within a printing tower or system.
- A change in blanket type or manufacturer may require other oversizes, blanket thicknesses or underlay thicknesses. Contact the WIFAG printing instructors before making such a change – we can then recommend the relevant corrections.

Oversize blanket bearer ring

Oversize (4) (theoretical values) for **non-tensioned and non-shrunken** blankets (1) (Fig. 4) (without lock-up loss of 0.01 - 0.02 mm):

- 0.25 mm Underlay = 0.16 - 0.19 mm
- 0.23 mm Underlay = 0.14 - 0.17 mm

Oversizes (4) (empirical values) for **shrunken and retensioned** blankets (1) after approx. 300,000 – 500,000 cylinder revolutions (Fig. 4):

- 0.25 mm Underlay = 0.11 - 0.14 mm
- 0.23 mm Underlay = 0.10 - 0.13 mm

Note

The installation locations for the various underlay thicknesses can be found on drawing no. 1447660 in the *Spare parts drawings* file.

Oversize printing plate bearer ring

The printing plate (1) with nominal dimension 0.30 0 / -0.02 mm has an oversize (3) above the bearer ring (2) of approx. 0.040 mm (Fig. 5).

Fig. 4 Oversize blanket

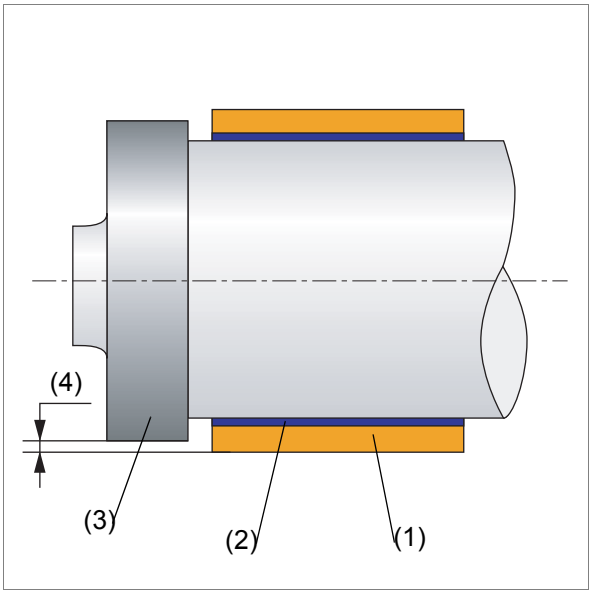

D37S_Q001M

(1) Blanket
(2) Underlay
(3) Bearer ring
(4) Blanket - bearer ring oversize

Fig. 5 Oversize printing plate

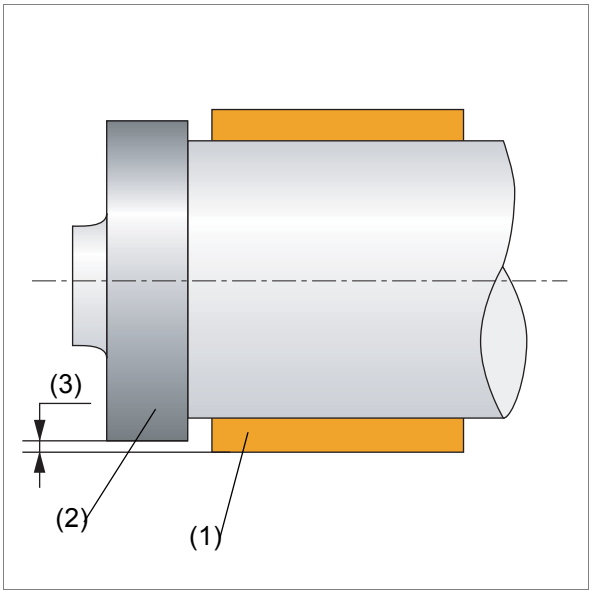

D37S_Q002M

(1) Printing plate
(2) Bearer ring
(3) Printing plate - bearer ring oversize

2.4 printing throwon

The impression throw-on positions the blanket cylinder (1) on the plate cylinder (2) and the opposite blanket cylinder (1) (Fig. 6).

Fig. 6 Impression throw-on, view from side I

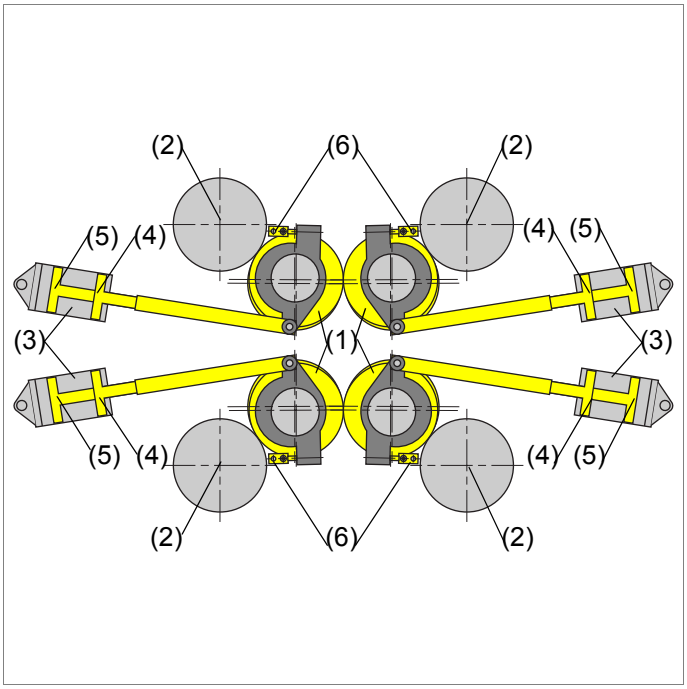

D37_M001M_01

(1) Blanket cylinder
(2) Plate cylinder
(3) Pneumatic cylinder
(4) Pneumatic piston in position PRINTING ON
(5) Pneumatic piston in position PRINTING OFF
(6) Stop for bearer ring setting

In the *PRINTING ON* position the bearer rings (6) of the cylinder run on contact (Fig. 7).

Regulation

The stops for the bearer ring adjustment are factory set and can only be set by qualified WIFAG personnel!

The throw-off speed is set at the one-way restrictor valves (3).

Note

The pneumatic valve for controlling the impression throw-on is located on the valve bank. Information about the pneumatic valve is found in the following chapters:

- Chap. 1.3 Pneumatic system schematics in the Index 8 Pneumatic system
- Chap. 2 Design and function in the Index 8 Pneumatic system
- Chap. 2.5 Valve bank in the Index 8 Pneumatic system

Fig. 7 Impression throw-on, side II

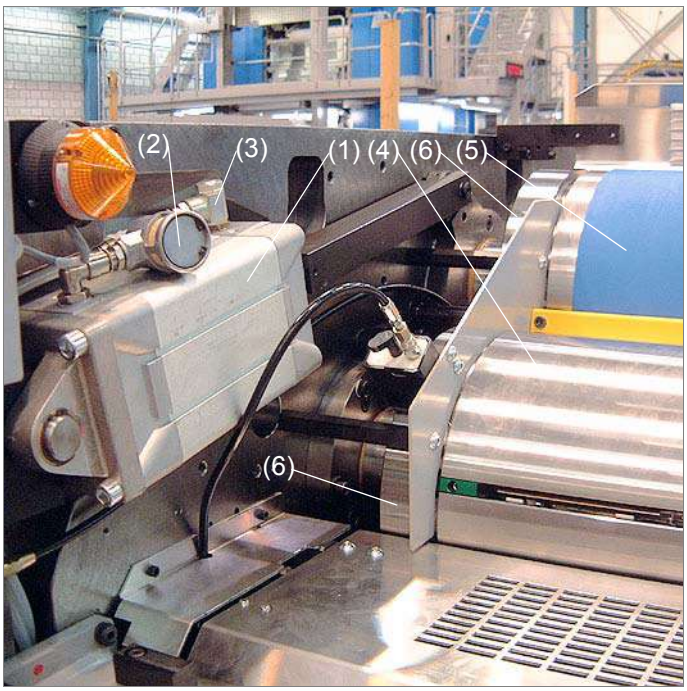

D_141_038_01

(1) Pneumatic cylinder
(2) Quick venting valve (PRINTING OFF)
(3) One-way restrictor valve (PRINTING ON)
(4) Plate cylinder
(5) Blanket cylinder
(6) Bearer ring

3 Replacing components

Contents

This chapter contains the following information:

- Chap. 3.1 WIFAG article numbers
- Chap. 3.2 Replace rubber blankets / rubber blanket underlays
- Chap. 3.3 Replacing tightening screw

Regulation

For safety reasons only the replacement work described in these operating instructions may be performed! All replacement work not described herein must be performed by qualified WIFAG personnel.

3.1 WIFAG article numbers

Tab. 1 Overview of components and accessories

Article	Obtainable only from WIFAG	Can be ordered from WIFAG
Blanket cylinder	1419456 1419859	----------
Arrester wedge (tension rod)	1363259	----------
Special grease Tunap Tunpas WP	----------	A96816
Blanket underlay 0.23 mm	----------	1420977
Blanket underlay 0.25 mm	----------	1420976
Stop gauge (blanket underlay)	1433539	----------
Cleaning agent Wema-Top	----------	A96815
Blanket	----------	1421014 / 1421013
Lifting strength measuring device	----------	100427
Velcro tape (tightening screw cover)	----------	119875 (1495010)
Round cord (tightening screw cover)	----------	119875 (1495008)
Sealing cord (lock up cover)	----------	1439041
Press-in device for lock up cover	1437533	----------
Steel spatula for clamping bar	1430300	----------
Allen socket (rubber blanket tensioning device)	1350823	----------
Impression throwon	1416574 1416580	----------

3.2 Replace rubber blankets / rubber blanket underlays

Requirements

- Production group / function group at a standstill
- Read Chap. 8.9 Carrying out repairs in the Index 2 Important for your safety in the *System* file.
- Blanket complies to specifications (Chap. 2.2 Useable blankets)

Auxiliary means

- Torque ratchet wrench
- Allen key attachment 6 mm 1350823
- Sharp knife
- Plastic spatula
- Cleaning cloth, cleaning paper
- Pure gasoline
- Cleaning agent Wema-Top
- Teflon-base lubricant spray
- Lifting strength measuring device 100427
- Sealing cord (lock-up cover) 1439041
- Press-in device for lock-up cover 1437533
- Velcro tape (tightening screw cover) 119875 (1495010)
- Round cord (tightening screw cover) 119875 (1495008)
- Gauge for blanket underlay 1433539
- 2 steel spatulas for clamping bar 1430300
- WIFAG drawing no. 1421014 / 1421013 (rubber blanket)
- WIFAG drawing no. 1420976 (rubber blanket underlay 0.25 mm)
- WIFAG drawing no. 1420977 (rubber blanket underlay 0.23 mm)
- WIFAG drawing no. 1447660 (installation location of rubber blanket underlays)
- Documentation for cylinder washing unit

⚠ WARNING	**Exposed, rotating rollers and cylinders!** Risk of injury due to pulling in, catching and crushing! => On the terminal, de-allocate the concerned printing couple from the production group with the *CHANGE RUBBER BLANKET* command and electrically disable. => Turn printing couple only with the command *PLACE PLATES* or *LIFT OUT PLATES*. => Inch printing couple *FORWARD* or *BACK* only when nobody is in the danger zone.

CAUTION	**Loose connection cable and hoses!** Damage to the cylinder caused by feed in, clamping! => Secure connection cable and hoses against clamping between cylinders and moving machine parts when removing cylinder washing units.

Prepare rubber blankets / rubber blanket underlays

1. Check rubber blankets in accordance with drawing no. 1421014 / 1421013.
2. Check underlays in accordance with drawing no. 1420977 / 1420976.
3. Fold over both ends of the blanket and roll over several times until the lock-up bars stand at about a 90° angle (Fig. 8), (Fig. 9).

Fig. 8 Roll over rubber blanket ends

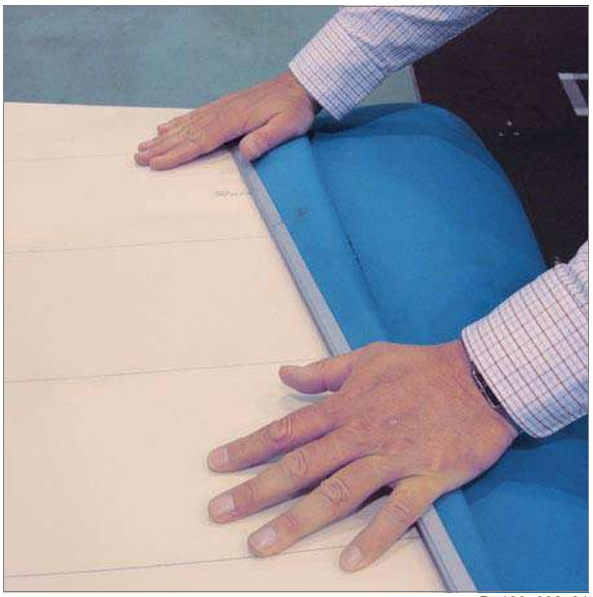

D_190_002_01

Fig. 9 Rubber blanket prepared

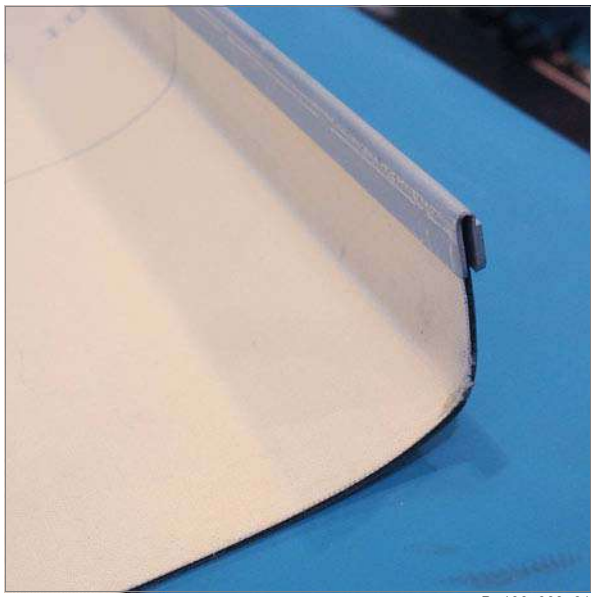

D_190_003_01

Pull off rubber blankets

4. On the terminal, change to the Menu Printer \ Blanket change mask.
5. Switch on *CHANGE RUBBER BLANKET* operating mode.
6. Remove the cylinder washing unit according to the manufacturer's documentation.
7. Remove lock-up slot cover (sealing cord) (1) (Fig. 14).
8. Remove the round cord (3) and open the Velcro tape (1) (Fig. 15).

CAUTION	**Damaged tension rod!** Damage to the tension rod due to excessive force when turning the tightening screw! => When turning, lightly shake the Allen key on the tightening screw. => Turn the tightening screw counterclockwise only until the opening of the tension rod is parallel to the lock-up slot. => Do not continue turning once the tightening screw is up against one of the stops.

9. Turn the tightening screw (1) counterclockwise as far as the stop (Fig. 10).
10. Pull the trailing clamping bar (2) out of the lock-up slot.
11. Pull off the rubber blanket (3).
12. Push the leading clamping bar (5) forwards and pull out of the lock-up slot.
13. Remove the rubber blanket (3).
14. Check the underlay (4) for damage and adhesion.

Fig. 10 Rubber blanket / rubber blanket underlay

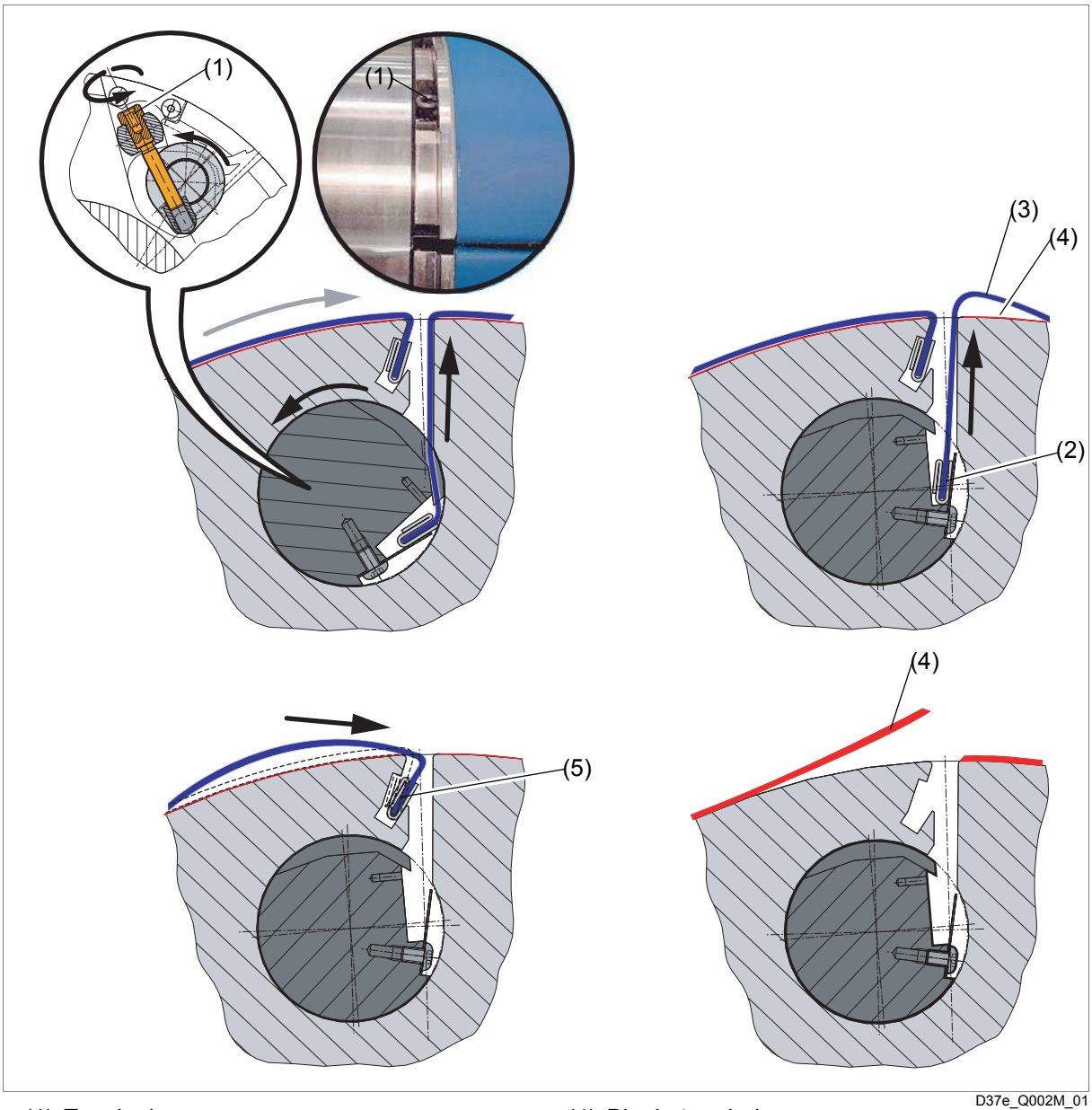

D37e_Q002M_01

(1) Tensioning screw
(2) Trailing clamping bar
(3) Blanket
(4) Blanket underlay
(5) Leading clamping bar

Replace rubber underlays

Note

The rubber blanket underlays can best be removed directly after a production (due to the higher cylinder temperature).

15. Pull off the underlays (4) (Fig. 10).
16. Check the blanket cylinder surface for damage.
17. Rub the blanket cylinder surface with Wema-Top, let it take effect 5 min. and then clean it off thoroughly with a sponge.
    - Mix 1 part Wema-Top with 4 - 5 parts of warm water.
18. Clean again with pure gasoline until the blanket cylinder surface is grease-free.
19. Place the gauge (1) into the lock-up slot (Fig. 13).

Regulation

The underlays (2) must be circumferentially and laterally centered. In the center of the cylinder the distance between the underlays (2) must not exceed 2 mm.

20. Position the first underlay half (2) across the entire width on gauge (1) and stick down.
21. Position the second underlay half (2) across the entire width on gauge (1) and stick down.
22. Bevel the edges of the underlay (2) running parallel to the slot at an angle of 30° to 45° using a sharp knife.

Pull on rubber blankets

Note

To prevent creasing in the center of the web, the blankets should be offsetwhen pulled on. Push blankets in the following directions from the center (this is a displacement of 3 - 4 mm):

- **Printing couples 1, 3, 5, 7** > Push blankets toward **side II**
  – Push the right blanket to the left until the edge of the blanket (1) is flush to the edge of the lock-up slot (2); push the left blanket to the right one (Fig. 11).
- **Printing couples 2, 4, 6, 8** > Push blankets toward **side I**
  – Push the right blanket to the left until the edge of the blanket (1) is flush to the edge of the lock-up slot (2); push the left blanket to the right one (Fig. 11).

Fig. 11 Blanket correctly positioned

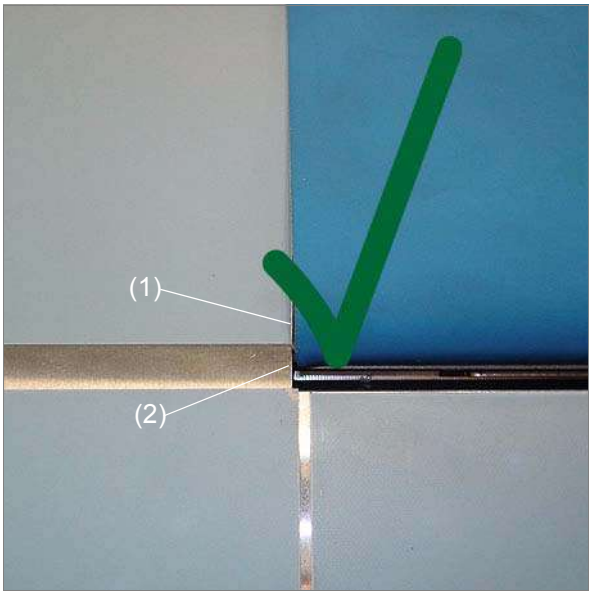

D_168_005_01

(1) Blanket edge
(2) Lock-up slot edge

Fig. 12 Blanket pushed too far

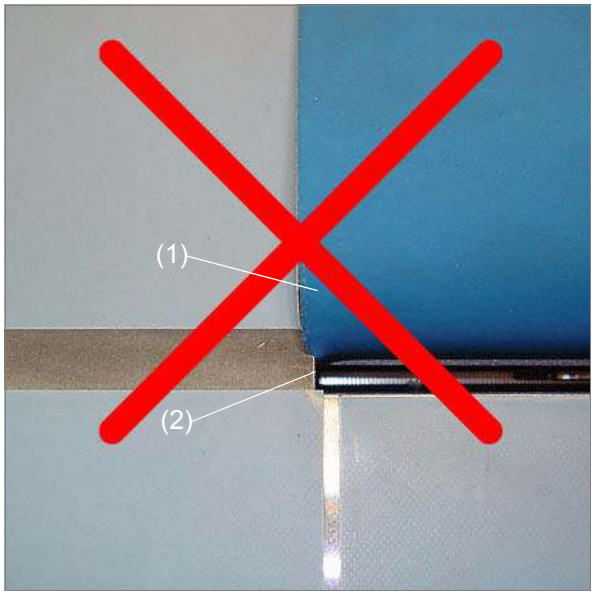

D_168_006_01

(1) Blanket pushed too far to the left
(2) Lock-up slot edge

23. Bend the blanket end by hand so that the leading clamping bar (3) (long clamping bar) can be pushed in (Fig. 13).
24. Push in the leading clamping bar (3) and pull to rear.
25. Pull on the rubber blanket (4) as taut as possible and overlapping 1 - 1.25 mm in the center of the cylinder.
26. On the terminal set the blanket cylinder to *PRINTING ON* position.
27. Bend the blanket end by hand so that the trailing clamping bar (5) (short clamping bar) can be pushed in.
28. Push in the trailing clamping bar (5) by hand.
29. Use two spatulas (6) to push the trailing clamping bar (5) downward to the stop.
30. Turn the tightening screw (7) clockwise until the rubber blanket (4) is slightly tensioned.
31. On the terminal set the blanket cylinder to *PRINTING OFF* position.
32. Flush adjust the blankets (4) overlapping in the middle of the blanket cylinder with the plastic spatula so that no gap is present.
33. Tighten the tightening screw (7) with a tightening torque of 25 Nm.

Fig. 13 Pull on rubber blanket / rubber blanket underlay

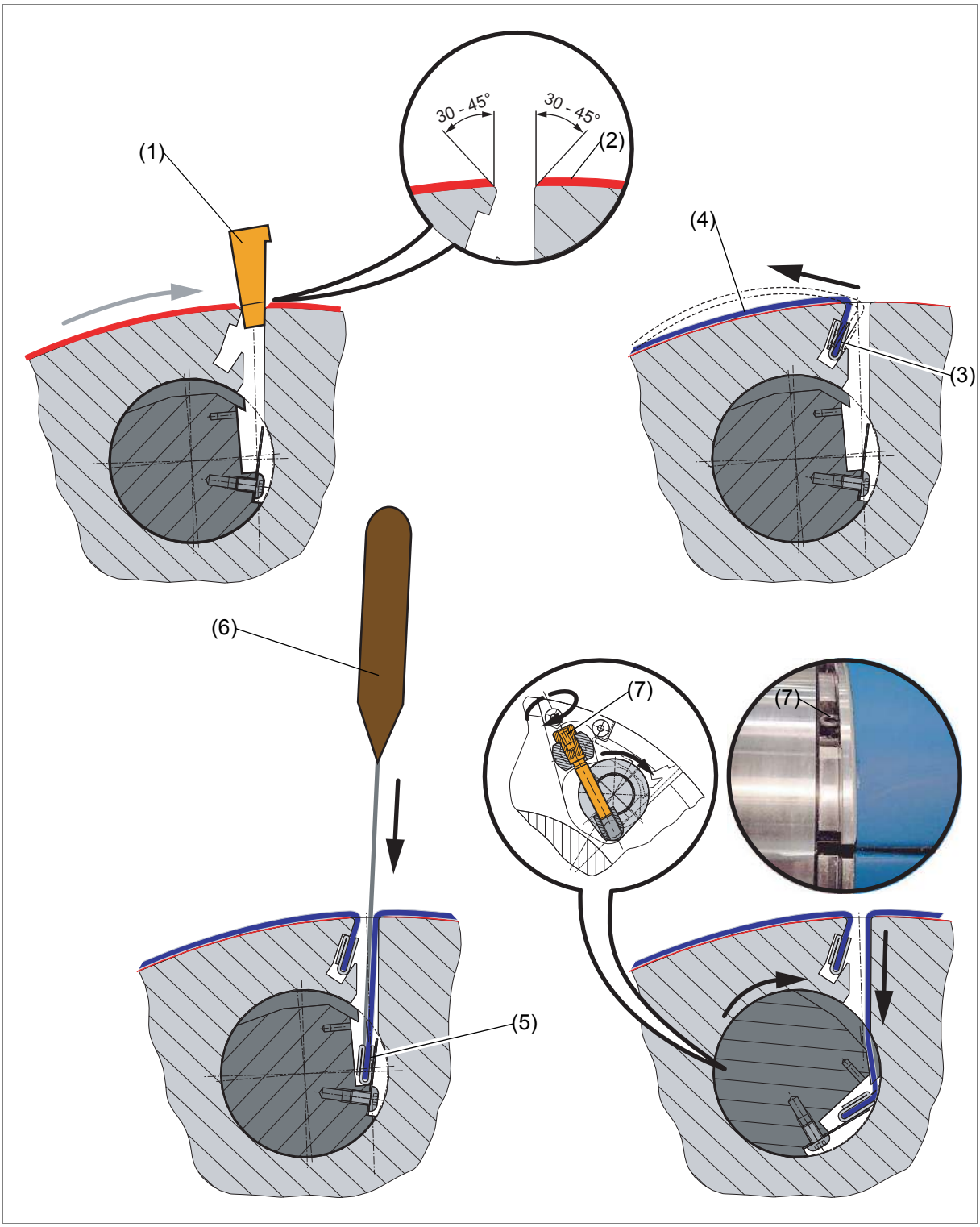

(1) Gauge (stop)
(2) Blanket underlay
(3) Leading clamping bar
(4) Blanket
(5) Trailing clamping bar
(6) Spatula
(7) Tensioning screw

Mount covers

34. Lightly spray the lock-up cover (sealing cord) (1) with Teflon spray and use the press-in device (2) to press it along the entire length into the lock-up slot (Fig. 14).

> There should be a 5 mm space on both sides between the lock-up slot cover (sealing cord) (1) and the edge of the blanket. If the distance to the bearer ring for pressing in the round cord (3) (Fig. 15) is not enough, shorten the sealing cord accordingly.

Fig. 14 Press in the lock-up slot cover (sealing cord)

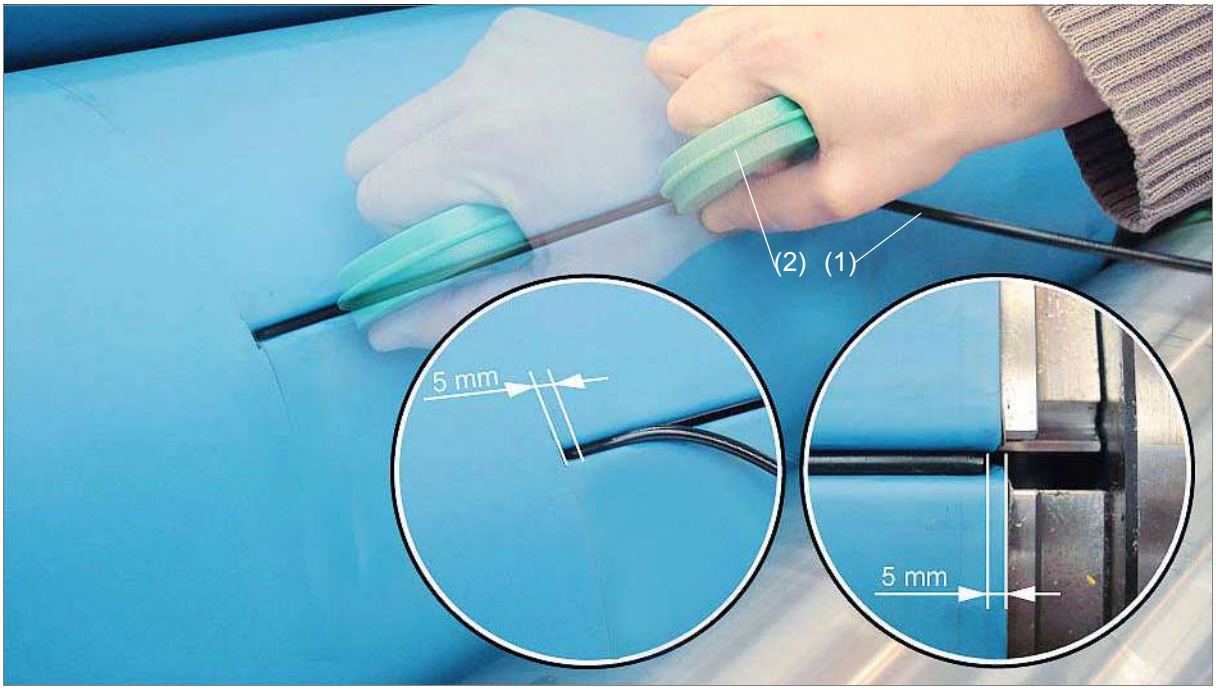

D_190_001_01

(1) Lock-up slot cover (sealing cord) (2) Press-in device

WARNING	**Exposed, rotating rollers and cylinders!** Risk of injury due to pulling in, catching and crushing! => Turn operating mode switch to position *MAKEREADY*. => Actuate the *SAFE-STOP* pushbutton. => Rotate cylinder by hand.

35. Position the Velcro tape (1) before the tightening screw (2), fix in place with the round cord (3) and press into the slot around the circumference (Fig. 15).
36. Remove the round cord (3), bind the Velcro tap (1) and press in the round cord (3) again.

Fig. 15 Insert tightening screw cover

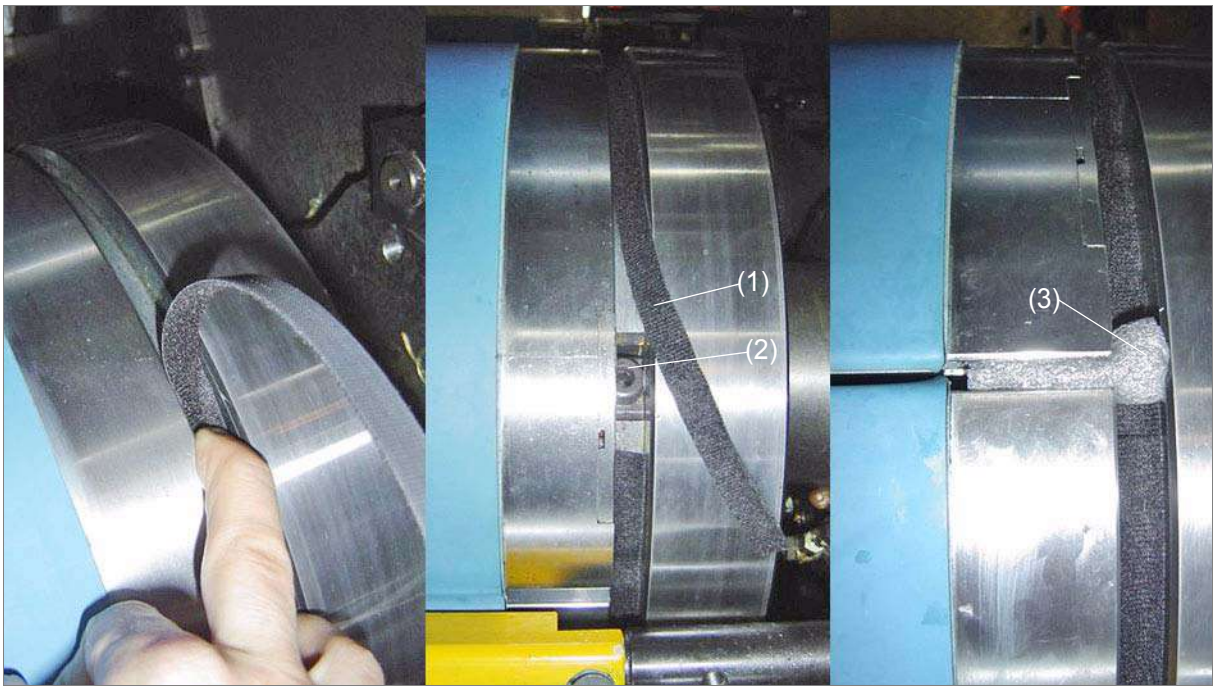

(1) Velcro tape
(2) Tensioning screw
(3) Round cord

Shrink rubber blanket

⚠ WARNING	**The rubber blanket can become loose and tear!** Risk of injury due to flying parts! => When blankets are drawn on, turn the cylinders only if the corresponding lock-up covers (sealing cords) are mounted.

37. Initiate the *ACKNOWLEDGE CHANGE* command.
    > The revolution counter is reset.
38. Switch off *CHANGE RUBBER BLANKET* operating mode.
39. Initiate the *START SHORT SHRINK PROGRAM* command.
    > The printing couple (with counterpressure cylinder) begins to turn.
    > The blanket cylinder is set to *PRINTING ON* position.
    > The printing couple turns 8 revolutions at 1000 cyl/hr. = 30 s (factory setting).
    > Position stop, the tightening screw (7) is at an accessible position.
40. Switch on *CHANGE RUBBER BLANKET* operating mode.
41. Re-tighten the tightening screw (7) with a tightening torque of 25 Nm (Fig. 13).
42. Switch off *CHANGE RUBBER BLANKET* operating mode.

43. On the terminal set the blanket cylinder to *PRINTING OFF* position.
44. Initiate the *START LONG SHRINK PROGRAM* command.
    > The printing couple (with counterpressure cylinder) begins to turn.
    > The blanket cylinder is set to *PRINTING ON* position.
    > The printing couple turns 2000 revolutions at 10,000 cyl/hr. = 12 min. (factory setting).
    > Position stop, the tightening screw (7) is at an accessible position.
45. Switch on *CHANGE RUBBER BLANKET* operating mode.
46. Re-tighten the tightening screw (7) with a tightening torque of 25 Nm.
47. Install the cylinder washing unit according to the manufacturer's documentation.
48. Switch off *CHANGE RUBBER BLANKET* operating mode.
49. On the terminal set the blanket cylinder to *PRINTING OFF* position.
50. On the terminal, change to the Information mask.
51. Re-tighten tightening screw (7) after 10,000 - 15,000 cyl/rev and 80,000 - 100,000 cyl/rev with a tightening torque of 25 Nm.
    > The rubber blankets / rubber blanket underlays are replaced.

Shrinking blanket during production

Note

To achieve best printing results, the procedure described above is also recommended during production. If it is not feasible to remove and feed in the paper web again due to time constraints, the following procedure is recommended:

1. Replace the rubber blanket as previously described.
2. Initiate the *ACKNOWLEDGE CHANGE* command.
   > The revolution counter is reset.
3. Switch off *CHANGE RUBBER BLANKET* operating mode.
4. On the terminal set the blanket cylinder to *PRINTING ON* position.
5. Rotate 20 revolutions at 2000 cyl/hr = about 40 s.
6. Re-tighten the tightening screw (7) with a tightening torque of 25 Nm.
7. Rotate 20 revolutions at 2000 cyl/hr = about 40 s.
8. Re-tighten the tightening screw (7) with a tightening torque of 25 Nm.
9. Re-tighten tightening screw (7) after 10,000 - 15,000 cyl/rev and 80,000 - 100,000 cyl/rev with a tightening torque of 25 Nm.

3.3 Replacing tightening screw

Requirements

- Production group / function group at standstill
- Read Chap. 8.9 Carrying out repairs in the Index 2 Important for your safety in the *System* file.

Auxiliary means

- Allen key set
- Torque wrench with 0.24 in Allen socket
- Plastic spatula
- Arrester wedges for tension rod
- Short Allen key 0.24 in
- Marking tool
- Brush and special grease Tunap Tunpas WP
- Chap. 3.2 Replace rubber blankets / rubber blanket underlays

WARNING	**Risk of injury!** **Risk of being trapped and crushed** by rotating rollers and cylinders! => On the terminal, de-allocate the concerned printing couple from the production group with the *CHANGE RUBBER BLANKET* command and electrically disable. => Turn printing couple only with the command *PLACE PLATES* or *LIFT OUT PLATES*. => Inch printing couple *FORWARD* or *BACK* only when nobody is in the danger zone.

CAUTION!	**Machine damage!** Damage to the **tension rod** due to excessive force when turning the tightening screw! => When turning, lightly shake the Allen key on the tightening screw. => Turn the tightening screw counterclockwise only until the opening of the tension rod is parallel to the lock-up slot. => Do not continue turning once the tightening screw is up against one of the stops.

1. Remove cylinder washing unit according to the manufacturer's documentation.
2. Pull off rubber blanket.
3. Turn tightening screw (3) clockwise as far as the stop and then turn back slightly (Fig. 16).
4. Insert arrester wedges (1) left and right in the slot.

⚠ **CAUTION!**	**Machine damage!** Unfastening of the **tension rod** due to dead weight! If the tension rod unfastens, the tension rod can no longer be screwed in and the whole expander must be removed. => Before screwing out the tightening screw, insert an arrester wedge left and right. => Use adhesive tape to fasten arrester wedges on upper bridges and printing couples. => If tightening screw is screwed out, do not move the inserted arrester wedges.

5. Turn tightening screw (3) clockwise as far as the stop.
   > The shank piece (5) contacts the screw holder (4).
6. Check arrester wedges (1) and push a little if necessary.
7. Clean the Allen of the screw lock (2) with the marking tool.
8. Loosen and remove retaining screw lock (2).
9. Carefully screw out tightening screw (3).
10. Clean new tightening screw (3) and coat with Tunap Tunpas WP.
11. Carefully screw in new tightening screw (3) as far as the stop.
12. Screw in screw lock (2) and tighten.
13. Remove arrester wedges (1).
14. Pull on rubber blanket.
15. Install cylinder washing unit according to the manufacturer's documentation.
16. Switch off *CHANGE RUBBER BLANKET*.
    > The tightening screw is now replaced.

Fig. 16 Replacing tightening screw

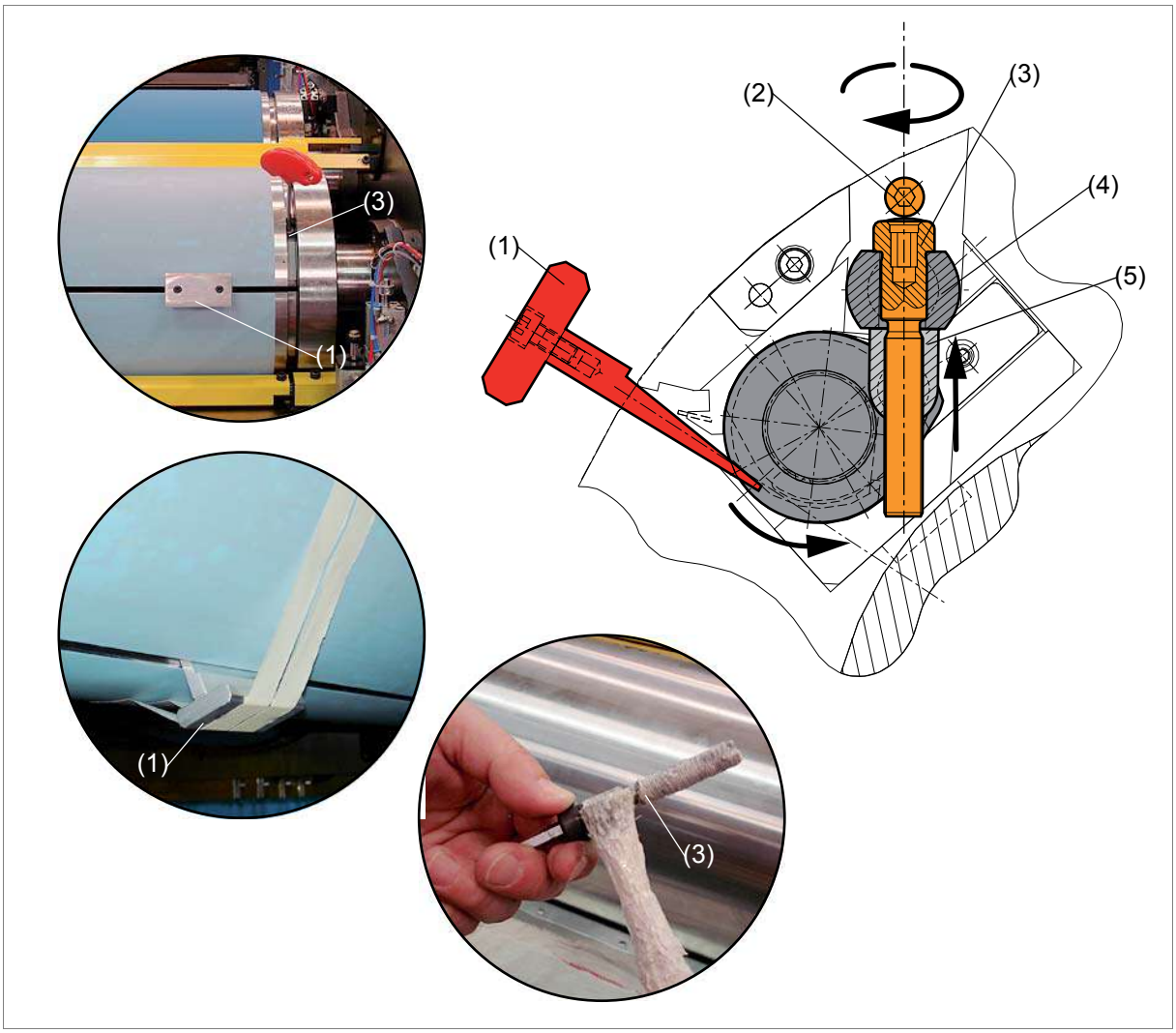

(1) Arrester wedge
(2) Screw lock (unfastened Allen screw 1412789)
(3) Tensioning screw
(4) Screw holder
(5) Shank piece on tension rod

4 Basic settings

Contents

This chapter contains the following information:

- Chap. 4.1 Setting
- Chap. 4.2 Calibration
- Chap. 4.3 Testing

Regulation

For safety reasons only the adjustment work described in these operating instructions may be performed! All adjustment work not described herein must be performed by qualified WIFAG personnel.

4.1 Setting

Note

No settings are necessary on this sub-function group.

4.2 Calibration

Note

No calibrations are necessary on this sub-function group.

4.3 Testing

Note

No tests are necessary on this sub-function group.

18 Washing units

1 Overview **18.3**

2 Construction and function **18.4**
2.1 Ink fountain roller washing unit **18.4**
2.2 Roller washing device **18.5**
2.3 Spray device cleaning agent (optional) **18.6**
2.4 Cylinder washing unit (optional) **18.8**

3 Replace components **18.9**
3.1 WIFAG article numbers **18.9**
3.2 Replacing doctor blade on the ink fountain roller washing unit **18.10**
3.3 Replacing doctor blade on the roller washing device **18.11**
3.4 Replace the filter cartridge of the pump group **18.12**
3.5 Replacing the solenoid valve on the spray device **18.14**
3.6 Replacing components of the cylinder washing unit **18.16**

4 Basic settings **18.17**
4.1 Setting **18.18**
4.1.1 Setting the roller washing device 18.18
4.2 Calibration **18.20**
4.3 Testing **18.20**

1 Overview

Fig. 1 Overview of washing unit, view from side I

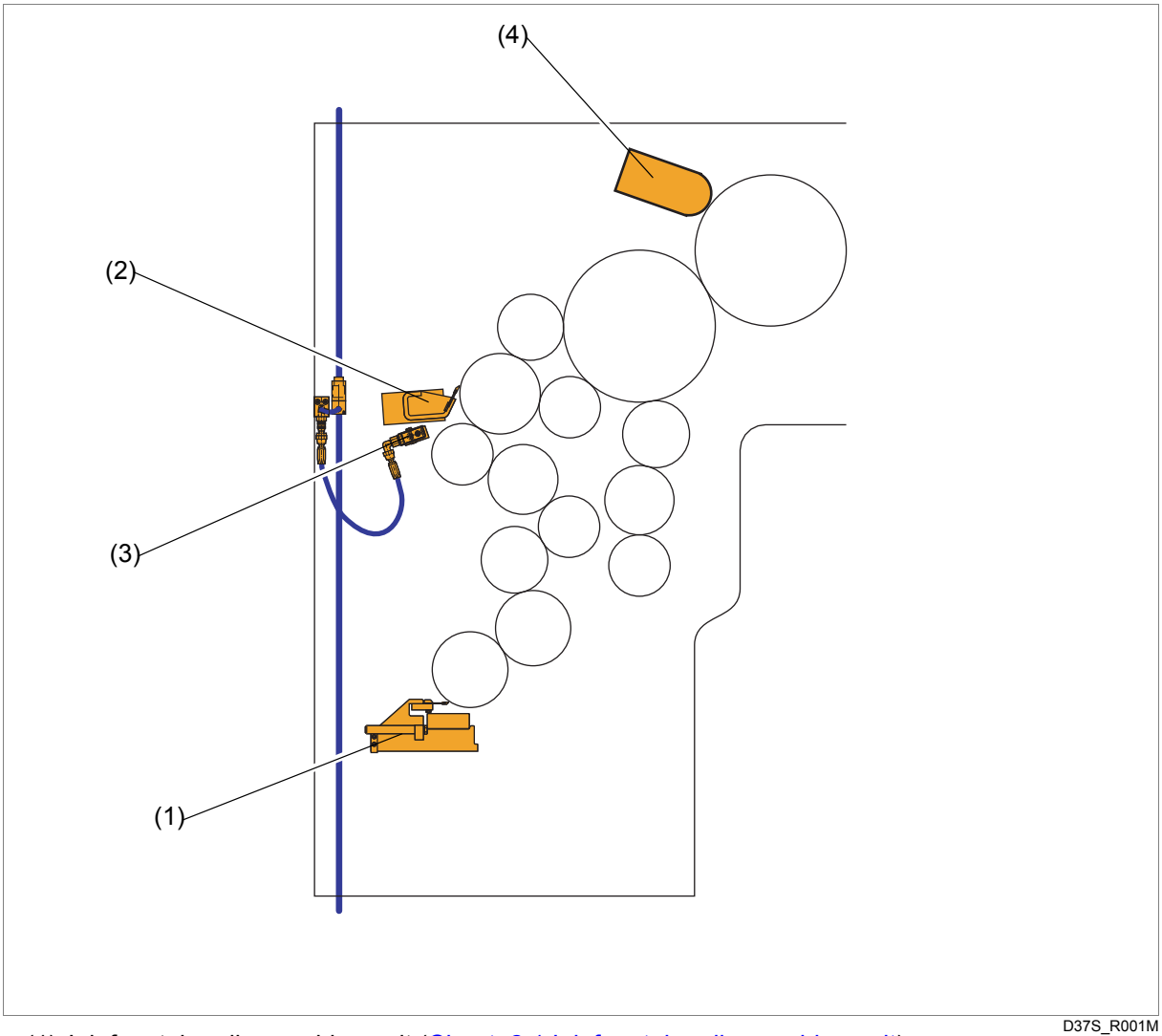

D37S_R001M

(1) Ink fountain roller washing unit (Chapt. 2.1 Ink fountain roller washing unit)
(2) Roller washing device (Chapt. 2.2 Roller washing device)
(3) Spraying device (optional) (Chapt. 2.3 Spray device cleaning agent (optional))
(4) Blanket cylinder washing unit (optional) (Chapt. 2.4 Cylinder washing unit (optional))

2 Construction and function

Contents

This chapter contains the following information:

- Chapt. 2.1 Ink fountain roller washing unit
- Chapt. 2.2 Roller washing device
- Chapt. 2.3 Spray device cleaning agent (optional)
- Chapt. 2.4 Cylinder washing unit (optional)

2.1 Ink fountain roller washing unit

The ink fountain roller washing unit (1) is used instead of the portable ink fountain and wipes off the ink on the ink fountain roller (2) (Fig. 2).

Fig. 2 Ink fountain roller washing unit

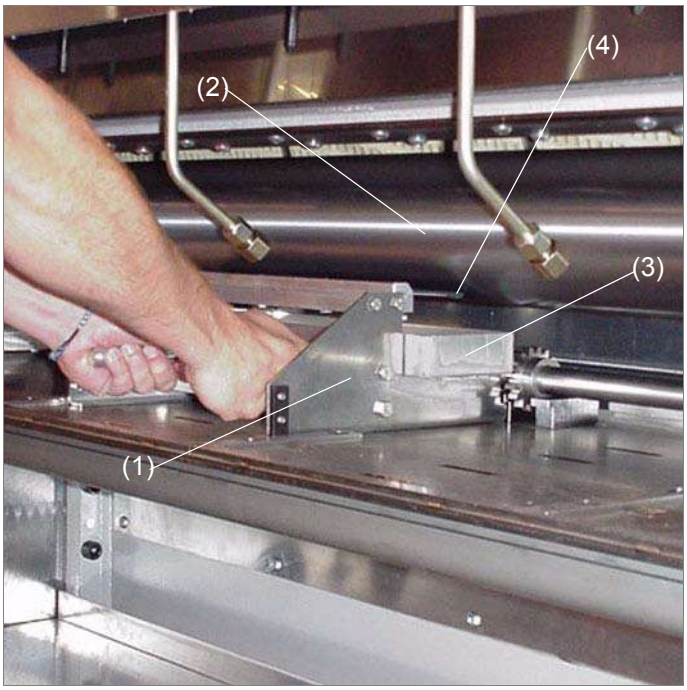

D_129_035_01

(1) Ink fountain roller washing unit
(2) Ink fountain roller
(3) Trough
(4) Doctor blade

2.2 Roller washing device

The roller washing device wipes off the ink on the ink oscillator drum (1) (Fig. 3).

Note

The trough (4) can be removed without using tools.

With the pneumatic cylinders in the holders (2) the trough (4) is thrown on and off with the doctor blade (5).
The throw-on speed is set at the one-way restrictor valves (3).
The throwon pressure is set on the pressure-regulating valve on the valve bank.

Note

The pneumatic valve for controlling the roller washing device is located on the valve bank. Information about the pneumatic valve is found in the following chapters:

- Chapt. 1.3 Pneumatic system schematics in Reg. 8 Pneumatic system
- Chapt. 2 Design and function in Reg. 8 Pneumatic system
- Chapt. 2.5 Valve bank in Reg. 8 Pneumatic system

Fig. 3 Roller washing device

D_188_013_01

(1) Ink oscillator drum
(2) Holder (with pneumatic cylinder)
(3) One-way restrictor valve (throw off)
(4) Trough
(5) Doctor blade

2.3 Spray device cleaning agent (optional)

The spray device (11) sprays the ink oscillator drum with cleaning agent (Fig. 4).

Fig. 4 Diagram of cleaning agent supply

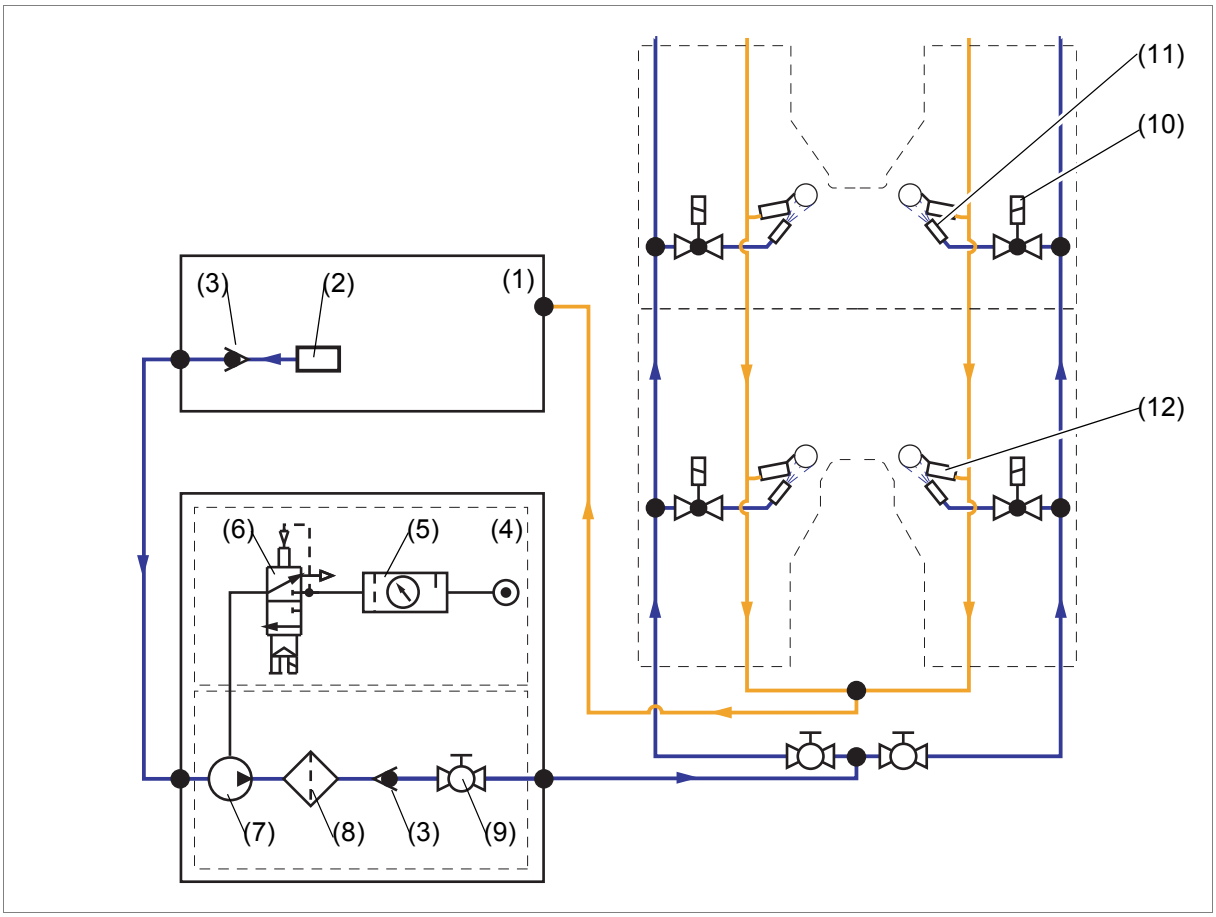

(1) Cleaning agent container
(2) Strainer
(3) One-way restrictor
(4) Pump group (Fig. 5)
(5) Filter-regulator-lubricator unit (Fig. 5)
(6) Pneumatic valve (Fig. 5)
(7) Double diaphragm valve (Fig. 5)
(8) Filter (Fig. 5)
(9) Stop-cock
(10) Solenoid valve (Fig. 6)
(11) Spray device (Fig. 7)
(12) Trough for roller washing device (return line optional) (Fig. 8)

Note

Further information about the double diaphragm valve and filter-regulator-lubricator unit can be found in the manufacturer's documentation in the *supplier's documentation* file.

Fig. 5 Pump group

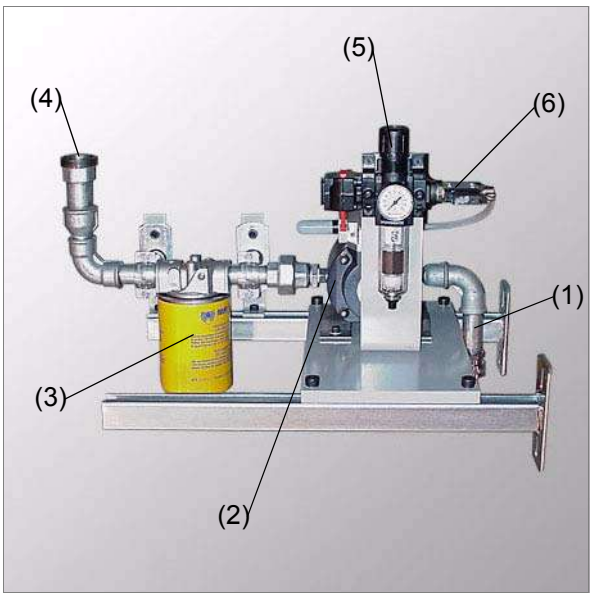

D_129_047_01

(1) Suction duct
(2) Double diaphragm valve
(3) Filter
(4) Pressure line (to solenoid valve)
(5) Filter-regulator-lubricator unit
(6) Pneumatic valve

Fig. 6 Solenoid valve, front face II

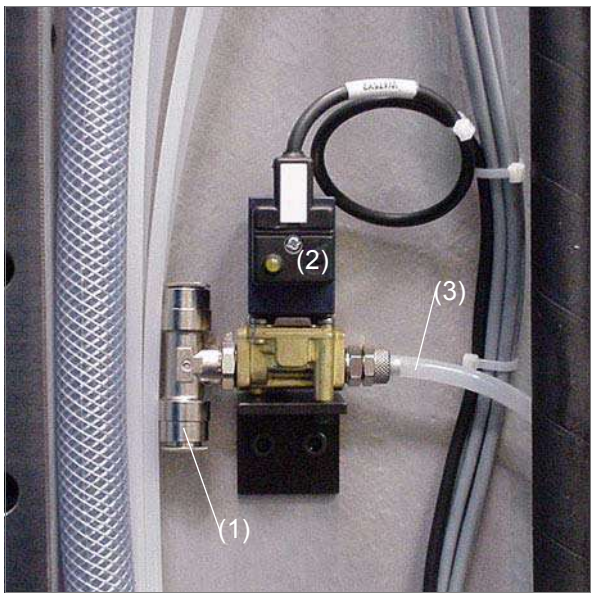

D_129_044_01

(1) Pressure line (from pump group)
(2) Solenoid valve
(3) Pressure line (to spray device)

Fig. 7 Spray device, side II

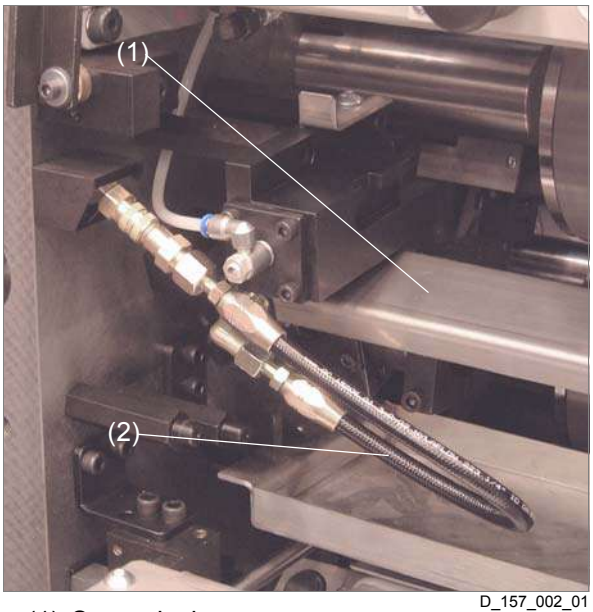

D_157_002_01

(1) Spray device
(2) Pressure line (to spray device)

Fig. 8 Spray device, side I

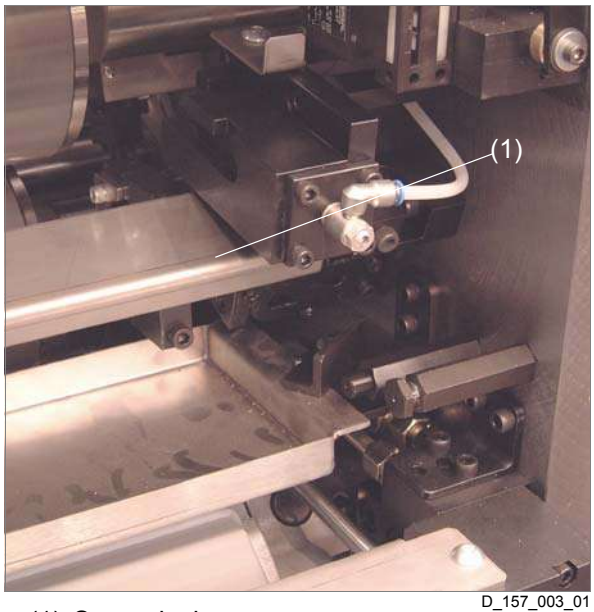

D_157_003_01

(1) Spray device

2.4 Cylinder washing unit (optional)

Note

Information on the cylinder washing units can be found in the manufacturer's documentation.

3 Replace components

Contents

This chapter contains the following information:

- Chapt. 3.1 WIFAG article numbers
- Chapt. 3.2 Replacing doctor blade on the ink fountain roller washing unit
- Chapt. 3.3 Replacing doctor blade on the roller washing device
- Chapt. 3.4 Replace the filter cartridge of the pump group
- Chapt. 3.5 Replacing the solenoid valve on the spray device
- Chapt. 3.6 Replacing components of the cylinder washing unit

Specification

For safety reasons only the replacement work described in these operating instructions may be performed! All replacement work not described herein must be performed by qualified WIFAG personnel.

3.1 WIFAG article numbers

Tab. 1 Overview of components and accessories

Article	Obtainable only from WIFAG	Can be ordered from WIFAG
Doctor blade for ink fountain roller washing unit	1415349	---------
Roller washing device doctor blade	1387725	---------
Pump group, spraying device	1344095	----------
Filter cartridge, spraying device	----------	A57306
Solenoid valve of the spray device	----------	A77365

3.2 Replacing doctor blade on the ink fountain roller washing unit

Requirements

- Washing unit is removed and clean (Chapt. 4.12 Clean ink fountain roller, ink knife, ink separators in Reg. 6 Maintenance)

Materials needed

- Soft cloth
- Cleaning agent
- Fork wrench size 10

CAUTION	**Machine damage!** Damage to the **ink oscillator drum** or the **ink fountain roller** due to damaged or not approved doctor blade! => Use only doctor blade in accordance with Chapt. 3.1 WIFAG article numbers. => Do not use damaged doctor blades.

1. Loosen retaining screws (1) and remove doctor blade (2) (Fig. 9).
2. Remove and clean retaining screws (1) and clamping bar (3).
3. Mount clamping bar (3) retaining screws (1).
4. Fit new doctor blade (2) and push as far as the stop.
5. Tighten retaining screws (1).

> The doctor blade is replaced.

Fig. 9 Ink fountain roller washing unit

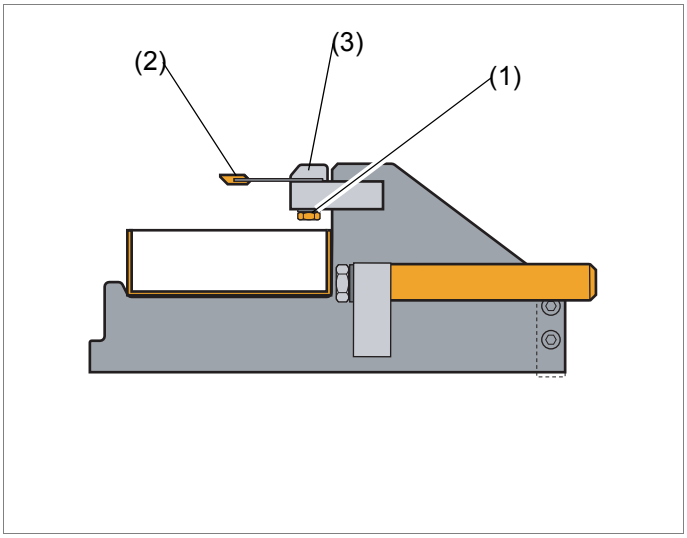

(1) Retaining screw
(2) Doctor blade
(3) Clamping bar

3.3 Replacing doctor blade on the roller washing device

Requirements

- Washing unit is removed and clean (Chapt. 4.10 Clean roller washing device in Reg. 6 Maintenance)

Materials needed

- Soft cloth
- Cleaning agent
- Fork wrench size 10
- Loctite 5910

CAUTION	**Machine damage!** Damage to the **ink oscillator drum** or the **ink fountain roller** due to damaged or not approved doctor blade! => Use only doctor blade in accordance with Chapt. 3.1 WIFAG article numbers. => Do not use damaged doctor blades.

1. Loosen retaining screws (1) and remove doctor blade (2) with clamping bar (3) (Fig. 10).
2. Clean retaining screws (1), clamping bar (3) and trough (4).
3. Coat mounting surfaces and tapping holes of the clamping bar (3) with Loctite 5910.
4. Insert clamping bar (3) in the trough (4) and screw in retaining screws (1).
5. Insert new doctor blade (2) and push to the retaining screws (1).
6. Tighten retaining screws (1).
7. Let dry 15 minutes and remove excess sealing compound.

> The doctor blade is now replaced.

Fig. 10 Roller washing device

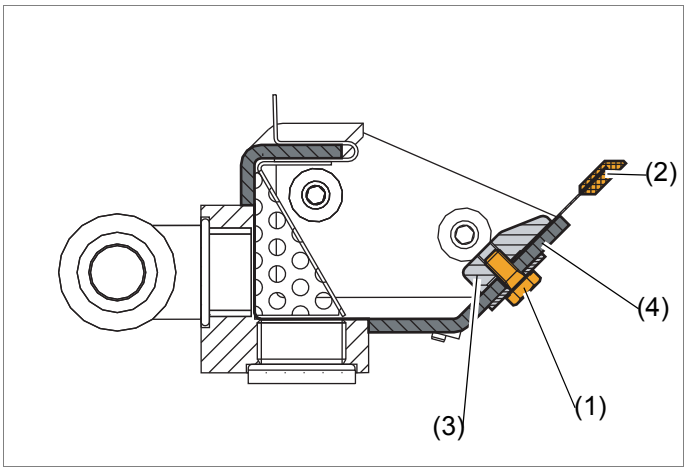

(1) Retaining screw
(2) Doctor blade
(3) Clamping bar
(4) Trough

3.4 Replace the filter cartridge of the pump group

Requirements

- Production group / function group at a standstill

Materials needed

- Cleaning cloth
- Collector
- Protective goggles
- Protective gloves

⚠ WARNING	**Spraying agent escaping under high pressure (4-6 bar)!** Eye injury due to escaping spraying agent! => Close the stop cock between the pump group and the pressure line. => Set pressure on filter-regulator-lubricator unit to 0 bar. => Wear protective goggles and protective gloves. => Observe the safety data sheets of the spraying agent manufacturer.

1. Place bucket under filter cartridge (3) (Fig. 11).
2. Turn filter cartridge (3) counterclockwise, loosen and remove.
3. Install and tighten new filter cartridge (3).
4. Open the stop cock between the pump group and the pressure line (4).
5. Adjust pressure on the filter-regulator-lubricator unit (5) to 3.5 - 5.5 bar (depending on the size of the system).

> The filter cartridge is replaced.

Fig. 11 Pump group

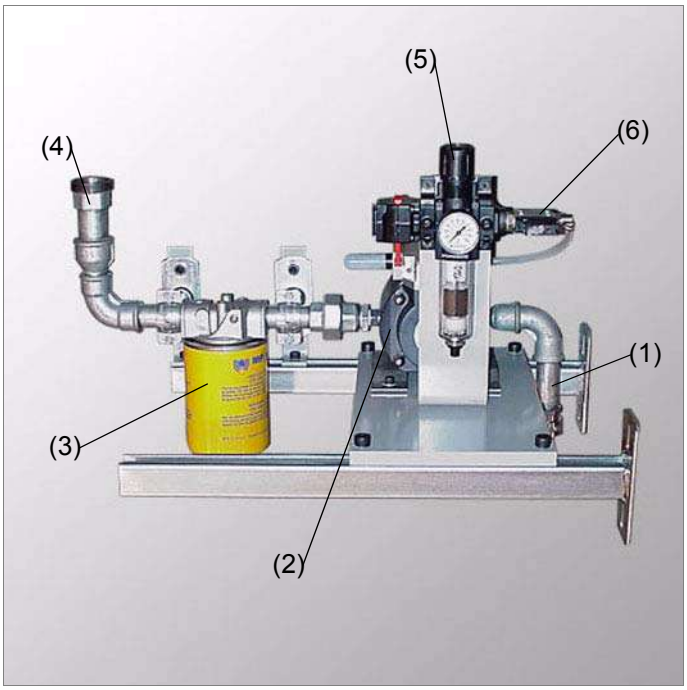

D_129_047_02

(1) Suction duct
(2) Double diaphragm valve
(3) Filter cartridge A57306
(4) Pressure line
(5) Filter-regulator-lubricator unit
Operating pressure: 3.5 - 5.5 bar
(6) Pneumatic valve

3.5 Replacing the solenoid valve on the spray device

Requirements

- Production group / function group at standstill
- Work on the electrical system may be performed only by specially trained **technicians**.
- Read Chapt. 8.9 Carrying out repairs in Reg. 2 Important for your safety in the *System* file.

Materials needed

- Allen key set
- Phillips screwdriver no. 2
- Soft cloth
- Bucket
- Protective goggles
- Resistant rubber gloves

DANGER	**Danger!** Risk of a lethal electric **surge**! => Work on electrical switching plants may be carried out only by personnel with the relevant training. => Observe instructions in Chapt. 5.1 Switching the power supply on and off in Reg. 2 Important for your safety. => Before touching electrical components, ensure that the power to the function group is switched off and check with a voltmeter.

WARNING	**Risk of injury!** **Damage to eyes** due to cleaning agent escaping at high pressure (3-7 bar)! => Close stop cock between pump group and pressure line. => Set pressure on filter-regulator-lubricator unit to 0 bar. => Wear protective goggles and protective gloves. => Observe the safety datasheets of the cleaning agent manufacturer.

1. Loosen retaining screw and pull plug (1) off (Fig. 13)
2. Loosen retaining screws (2) and remove solenoid valve.

3. Place bucket under solenoid valve and disconnect lines (3); (4).
4. Unscrew screw unions and screw onto new solenoid valve.

Note

Make sure the flow direction of the solenoid valve is correct. The flow direction is shown on the solenoid valve housing (arrow) or in the corresponding drawing.

5. Connect lines (3); (4).
6. Attach plug (1) and fasten with retaining screw.
7. Mount solenoid valve and tighten with the retaining screws (2).
8. Switch on the voltage supply/supplies.
9. Open stop-cock between pump group and pressure line (4) (Fig. 12).
10. Adjust pressure on the filter-regulator-lubricator unit (5) to 3.5 - 5.5 bar (depending on the size of the system).

> The solenoid valve is now replaced.

Fig. 12 Pump group

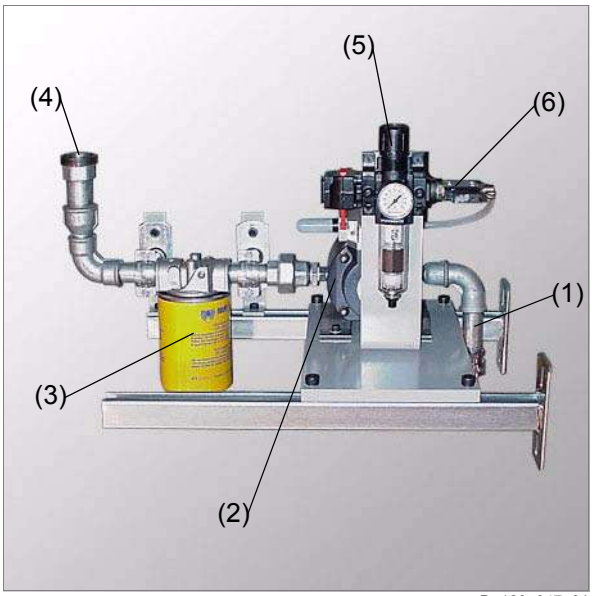

D_129_047_01

(1) Suction duct
(2) Double diaphragm valve
(3) Filter
(4) Pressure line
(5) Filter-regulator-lubricator unit
(6) Pneumatic valve

Fig. 13 Solenoid valve, front face II

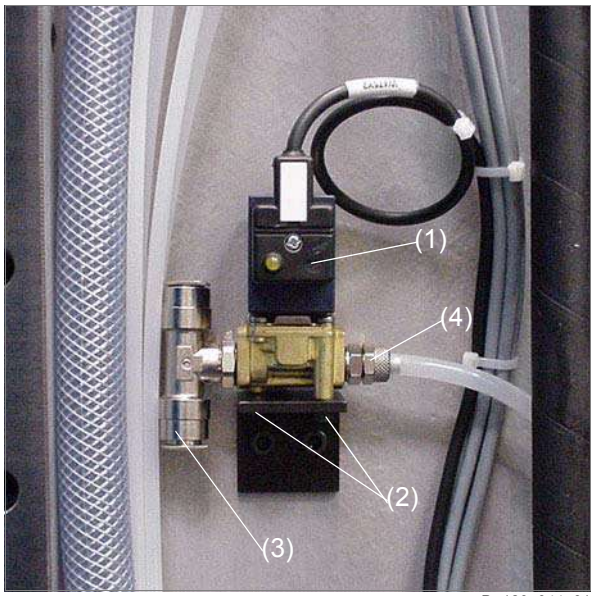

D_129_044_01

(1) Connector plug
(2) Retaining screw
(3) Pressure line (from pump group)
(4) Pressure line (to spray device)

3.6 Replacing components of the cylinder washing unit

Requirements

- Production group / function group at standstill
- Work on the electrical system may be performed only by specially trained **technicians**.
- Read Chapt. 8.9 Carrying out repairs in Reg. 2 Important for your safety in the *System* file.

Materials needed

- Manufacturer's documentation
- Warning sign *Work is in progress!*

WARNING	**Risk of injury!** **Risk of being trapped and crushed** by rotating rollers and cylinders! => De-allocate function group from the production group at the terminal and electrically disable (push the *SAFE-STOP* pushbutton). => Place *Work in progress!* warning signs on the corresponding terminals and control panels.

WARNING	**Risk of injury!** **Environmental pollution** due to improperly disposed of washing agent! => Comply with the local statutory regulations.

CAUTION	**Machine damage!** Damage to **cylinders** due to clamped connection cables and hoses! => Secure connection cable and hoses against clamping between cylinders and moving machine parts when removing cylinder washing units.

1. Replace component in accordance with the manufacturer's documentation.
2. Electrically enable function group with the *SAFE-STOP* pushbutton.
3. Remove *Work is in progress!* warning sign.

4 Basic settings

Contents

This chapter contains the following information:

- Chapt. 4.1 Setting
- Chapt. 4.2 Calibration
- Chapt. 4.3 Testing

Specification

For safety reasons only the adjustment work described in these operating instructions may be performed! All adjustment work not described herein must be performed by qualified WIFAG personnel.

4.1 Setting

4.1.1 Setting the roller washing device

Requirements

- Production group / function group at a standstill

Materials needed

- Hexagon key set
- Straight screwdriver no. 3
- Mobile pressure gauge
- Chapt. 1.3 Pneumatic system schematics in Reg. 8 Pneumatic system

⚠ WARNING	**Exposed, rotating rollers and cylinders!** Risk of injury due to pulling in, catching and crushing! => Turn operating mode switch to position *MAKEREADY*. => Actuate the *SAFE-STOP* pushbutton. => Place the *Work is in progress!* warning sign.

Setting the throw-off speed

1. Close one-way restrictor valves (1) clockwise as far as the stop (Fig. 14).
2. Open one-way restrictor valves (1) by 1 ½ turns (factory setting).

Setting the throw-on pressure

3. Set the pressure on the relevant pressure regulating valve (valve bank) to 4 bar (factory setting) using a portable manometer.
4. Turn operating mode switch to position *OPERATION*.

> The roller washing device is now set.

Fig. 14 Roller washing device

D_188_013_01

(1) Ink oscillator drum
(2) Holder (with pneumatic cylinder)
(3) One-way restrictor valve (throw off)
(4) Trough
(5) Doctor blade

4.2 Calibration

Note

No calibrations are necessary on this sub-function group.

4.3 Testing

Note

No tests are necessary on this sub-function group.

19 Web monitoring

1 Overview **19.3**

2 Construction and function **19.4**
2.1 web-break switch **19.4**
2.2 Web severer **19.6**
2.3 Anti-reversing device **19.7**
2.4 Carrier roller brake **19.9**

3 Replace components **19.10**
3.1 WIFAG article numbers **19.10**
3.2 Replacing the reflected light sensor of web break detector **19.11**
3.3 Replacing the web severer blade for the web severer **19.13**
3.4 Replace components of the anti-reversing device **19.15**
3.5 Replacing the brake segment for the carrier roller brake **19.20**
3.6 Replace pneumatic cylinder **19.21**

4 Basic settings **19.22**
4.1 Setting **19.23**
4.1.1 Set position of the reflected light sensor 19.23
4.1.2 Setting anti-reversing device 19.24
4.2 Calibration **19.25**
4.3 Testing **19.25**
4.3.1 Test reflected light sensors 19.25
4.3.2 Testing the web monitoring system 19.26

1 Overview

Note

(Fig. 1) provides a sample schematic diagram. An overview of customer-specific web monitoring is found in the webbing diagrams.

Fig. 1 Overview of web monitoring (example)

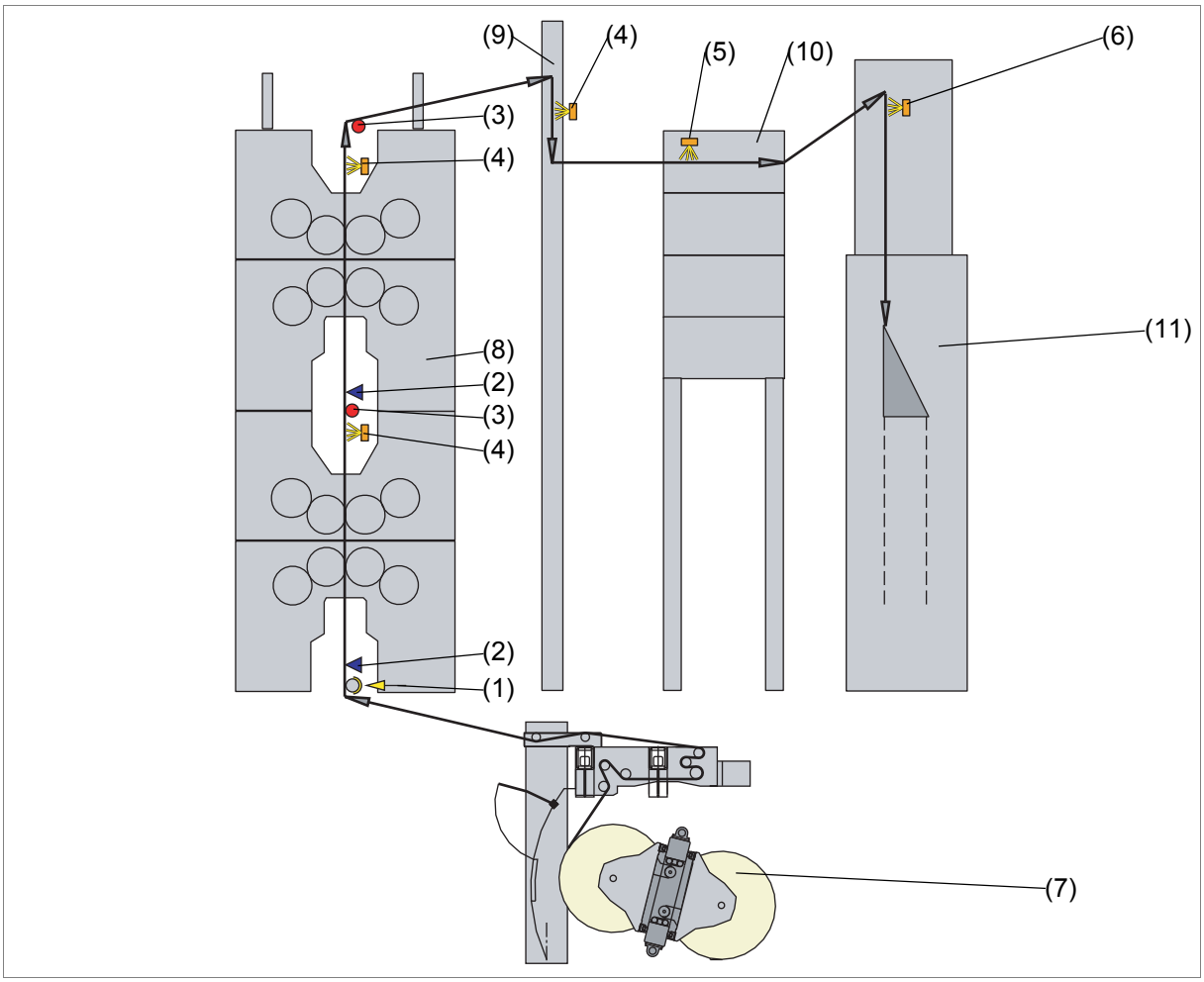

(1) Carrier roller brake (Chapt. 2.4 Carrier roller brake)
(2) Web severer (Chapt. 2.2 Web severer)
(3) Anti-reversing device (Chapt. 2.3 Anti-reversing device)
(4) web-break switch (Chapt. 2.1 web-break switch)
(5) Supplementary web break switch (Reg. 10 Web monitoring in the *Angle-bar module* file)
(6) Web break switch (in the Reg. 9 Web and copy monitoring *Folder* file)
(7) Dérouleur
(8) Printing tower
(9) Pillar
(10) Angle-bar module
(11) Folder

2 Construction and function

Contents

This chapter contains the following information:

- Chapt. 2.1 web-break switch
- Chapt. 2.2 Web severer
- Chapt. 2.3 Anti-reversing device
- Chapt. 2.4 Carrier roller brake

2.1 web-break switch

The web is monitored by reflected light sensors (1) (Fig. 2), (Fig. 3).
The reflected light sensors (1) can be laterally moved in the guide rails (2). The reflected light sensors (1) are connected to WAGO I/O.

Note

Further information about WAGO I/O is in Chapt. 2.4.3 WAGO I/O system in Reg. 7 Electrical and control systems in the *System* file.

Fig. 2 Reflected light sensor, below

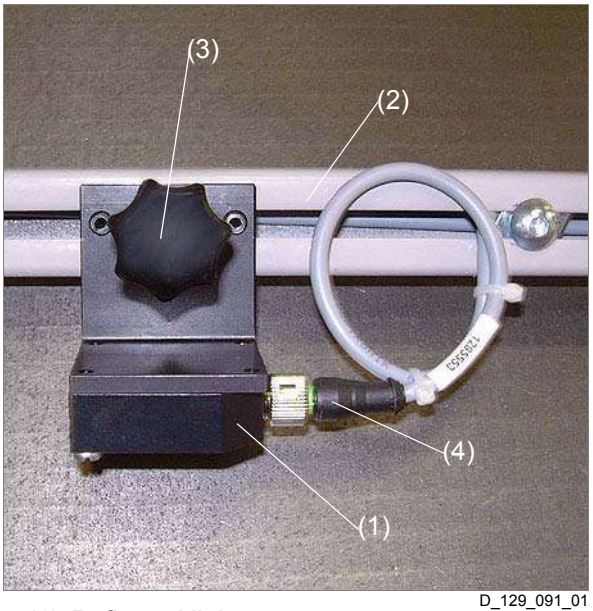

D_129_091_01

(1) Reflected light sensor
(2) Guide rail
(3) Handle for arrester
(4) Electrical connector plug

Fig. 3 Reflected light sensor, front

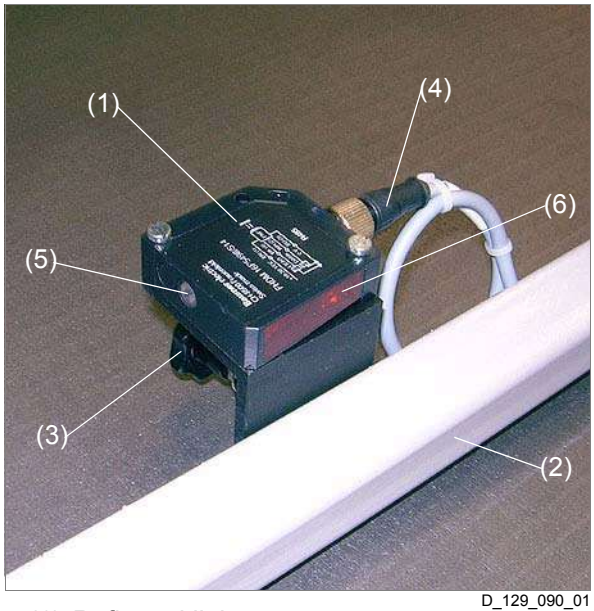

D_129_090_01

(1) Reflected light sensor
(2) Guide rail
(3) Handle for arrester
(4) Electrical connector plug
(5) LED (status display)
(6) Optical element

All web break detectors involved in the production are activated:
- after 10 seconds at a machine speed of > feed-in speed
- or at a machine speed of ≥ 3000 cyl. rev/hr.

Paper guide monitoring

This function can be activated or deactivated on the control console. However, this is only possible if the machine speed of system parts participating in the production is 0 cyl. rev/hr. When loading a new production, this function is automatically activated. After the “faster” command, an incorrect paper guide triggers the *STOP* command for the production group.

Web break monitoring (printing unit / pillar)

A web break triggers the following elements or commands:
- *SAFE-STOP* command for the concerned production group.
- *PRINTING OFF* command for the concerned production group.
- Beginning at a machine speed of ≥ 10,000 cyl. rev./hr the concerned web severers are triggered.
- Beginning at a machine speed of ≥ 10,000 cyl. rev./hr the carrier roller brakes are triggered.

The web break monitoring is deactivated.
- At machine standstill or at a machine speed of < 3000 cyl. rev/h.

Web break monitoring (angle-bar module)

A web break triggers the following elements or commands:
- *SAFE-STOP* command for the concerned production group.
- *PRINTING OFF* command for the concerned production group.
- Beginning at a machine speed of ≥ 20,000 cyl. rev/hr the concerned web severers are triggered.

Soiling monitoring of the reflected light sensors

A dirty reflected light sensor (1) triggers the *STOP* command for the corresponding web or production group (also in standstill).

Defect monitoring of the reflected light sensors

A defective reflected light sensor (1) triggers the *STOP* command for the corresponding web or production group (also in standstill).

2.2 Web severer

The web severer (1) is moved by the pneumatic cylinder (2) upward in the profile bar (3) (Fig. 4), (Fig. 5).

The web severer is triggered:

- If a web break detector detects a web break at a machine speed of ≥ 10,000 cyl. rev./hr.

Note

The pneumatic valve for controlling the web severer is located on the valve bank. Information about the pneumatic valve is found in the following chapters:

- Chapt. 1.3 Pneumatic system schematics in Reg. 8 Pneumatic system
- Chapt. 2 Design and function in Reg. 8 Pneumatic system
- Chapt. 2.5 Valve bank in Reg. 8 Pneumatic system

Fig. 4 Web severer, from the side

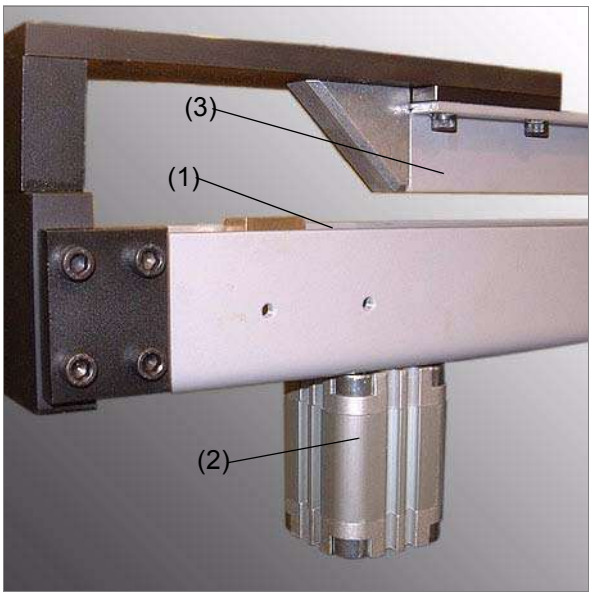

D_129_088_01

(1) web severer
(2) Pneumatic cylinder
(3) Profile bar

Fig. 5 Web severer, from the front

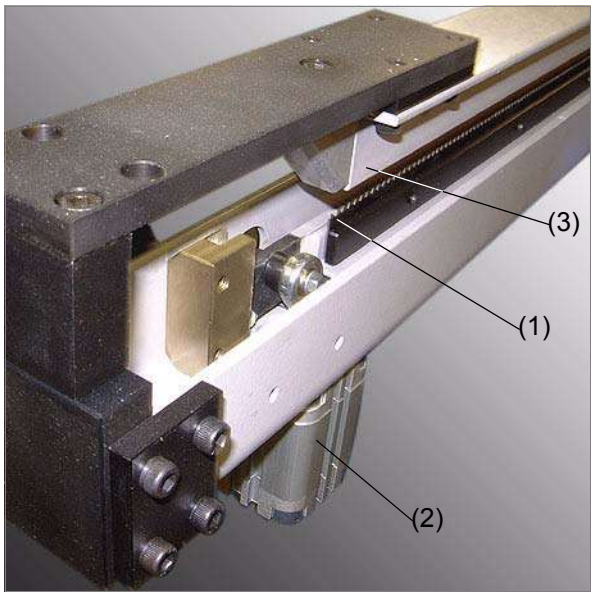

D_129_089_01

(1) web severer
(2) Pneumatic cylinder
(3) Profile bar

2.3 Anti-reversing device

Printing function

This anti-reversing device pulls a severed web tensioned out of the printing unit and in this way prevents reverse winding of the web (Fig. 6).

How it works

The pressure rollers (1) are pressed by the pneumatic cylinders (3) onto the carrier roller (2). The thrown-on pressure can be set. The pneumatic valve and the pressure-regulating valve are located on the valve bank in the topmost bridge of the corresponding printing tower.

The pressure rollers are automatically thrown on when:

- Machine speed is > feed in speed

The pressure rollers are automatically thrown off when:

- Machine speed is < feed in speed

Technical data

- Throwon pressure: 4 bar

Additional information

- Chapt. 1.3 Pneumatic system schematics in Reg. 8 Pneumatic system
- Chapt. 2 Design and function in Reg. 8 Pneumatic system

Fig. 6 Anti-reversing device

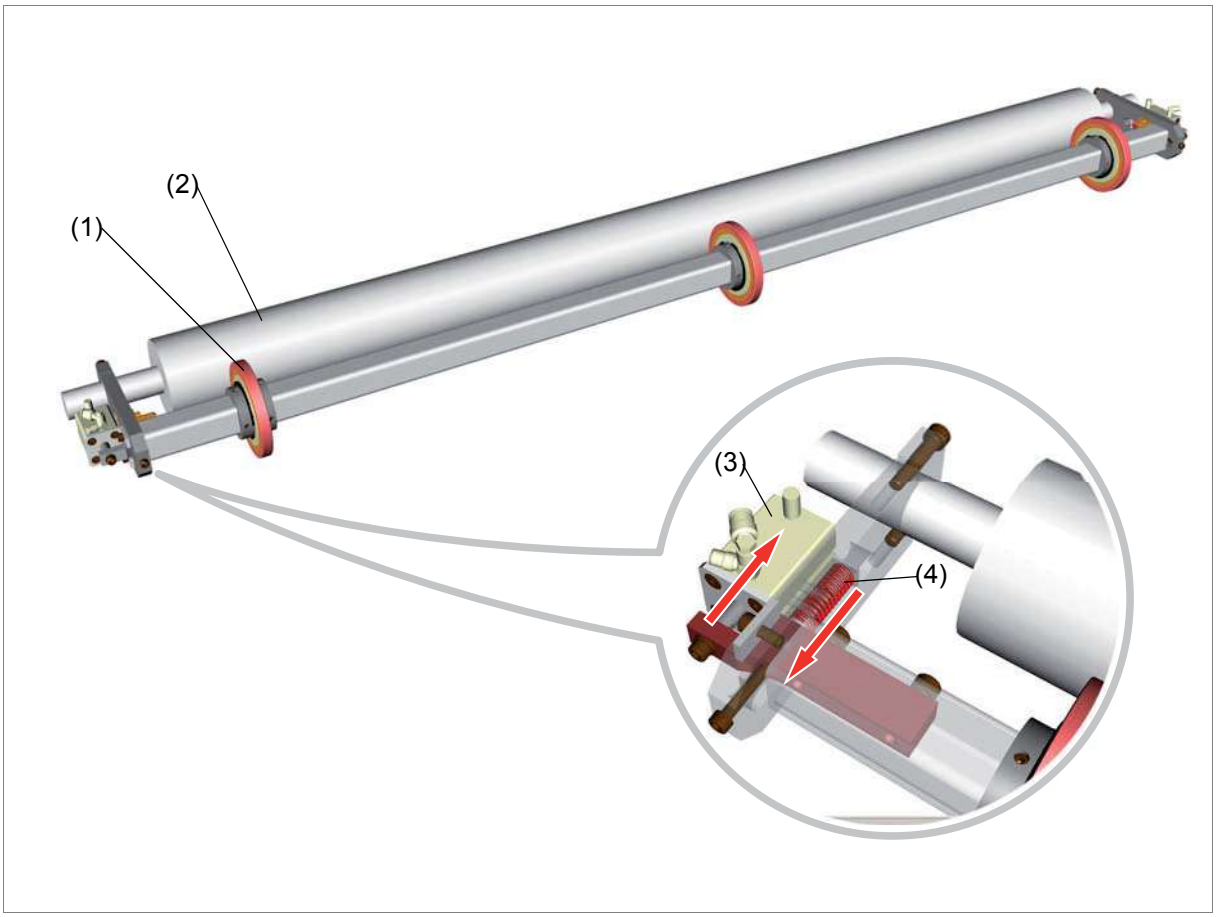

(1) Pressure roller
(2) carrier roller
(3) Pneumatic cylinder
(4) Compression spring

2.4 Carrier roller brake

The braking segment (1) is pressed by the pneumatic cylinder (2) onto the carrier roller (3) (Fig. 7).

The carrier roller brake is triggered:

- if the command *SAFE-STOP* was triggered at a machine speed of > feed-in speed.
- If a web break detector detects a web break at a machine speed of ≥ 10,000 cyl. rev./hr.

Note

The pneumatic valve for controlling the carrier roller brake is located on the valve bank.
Information about the pneumatic valve is found in the following chapters:

- Chapt. 1.3 Pneumatic system schematics in Reg. 8 Pneumatic system
- Chapt. 2 Design and function in Reg. 8 Pneumatic system
- Chapt. 2.5 Valve bank in Reg. 8 Pneumatic system

Fig. 7 Carrier roller brake

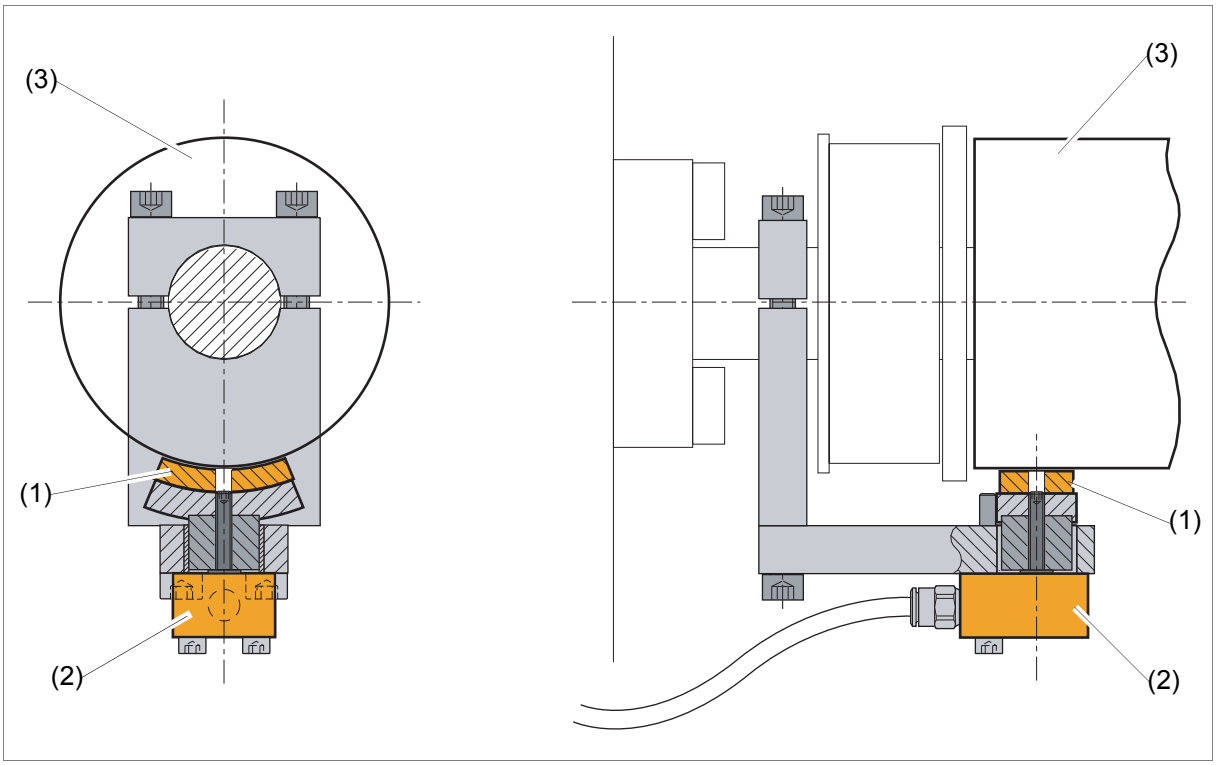

D47S_S002M

(1) Brake segment
(2) Pneumatic cylinder
(3) carrier roller

3 Replace components

Contents

This chapter contains the following information:

- Chapt. 3.1 WIFAG article numbers
- Chapt. 3.2 Replacing the reflected light sensor of web break detector
- Chapt. 3.3 Replacing the web severer blade for the web severer
- Chapt. 3.4 Replace components of the anti-reversing device
- Chapt. 3.5 Replacing the brake segment for the carrier roller brake
- Chapt. 3.6 Replace pneumatic cylinder

Specification

For safety reasons only the replacement work described in these operating instructions may be performed! All replacement work not described herein must be performed by qualified WIFAG personnel.

3.1 WIFAG article numbers

Tab. 1 Overview of components and accessories

Article	Obtainable only from WIFAG	Can be ordered from WIFAG
reflected light sensor of web break detector	----------	A4-04150EW
Web severer blade for web severer	1426901	----------
Pneumatic cylinder for web severer	----------	112396
Mounting bracket for the anti-reversing device	1426862	----------
Pressure roller of anti-reversing device	----------	1426840
Pneumatic cylinder for anti-reversing device	----------	116531
Brake segment for carrier roller brake	A4-11865RO	----------
Pneumatic cylinder for carrier roller brake	----------	112298

3.2 Replacing the reflected light sensor of web break detector

Requirements

- Production group at standstill
- Read Chapt. 8.9 Carrying out repairs in Reg. 2 Important for your safety in the *System* file.

Materials needed

- Screwdriver no. 4
- Matt black paper strip
- Warning signs *Work is in progress!*
- Chapt. 4.3.1 Test reflected light sensors

WARNING	
	Risk of injury! **Risk of being trapped and crushed** by rotating rollers and cylinders! => De-allocate function group from the production group at the terminal and electrically disable (push the *SAFE-STOP* pushbutton). => Place *Work in progress!* warning signs on the corresponding terminals and control panels.

Replacing the reflected light sensor

1. Remove electrical connector plug (2) (Fig. 8); (Fig. 9).
2. Loosen retaining screws (3) and remove reflected light sensor (1).
3. Mount new reflected light sensor (1) and tighten retaining screws (3).
4. Connect electrical connector plug (2).

Test the reflected light sensor

5. Test reflected light sensor (1) (Chapt. 4.3.1 Test reflected light sensors).
6. Electrically enable function group with the *SAFE-STOP* pushbutton.
7. Remove *Work is in progress!* warning sign.

> The reflected light sensor is now replaced.

Fig. 8 Reflected light sensor, below

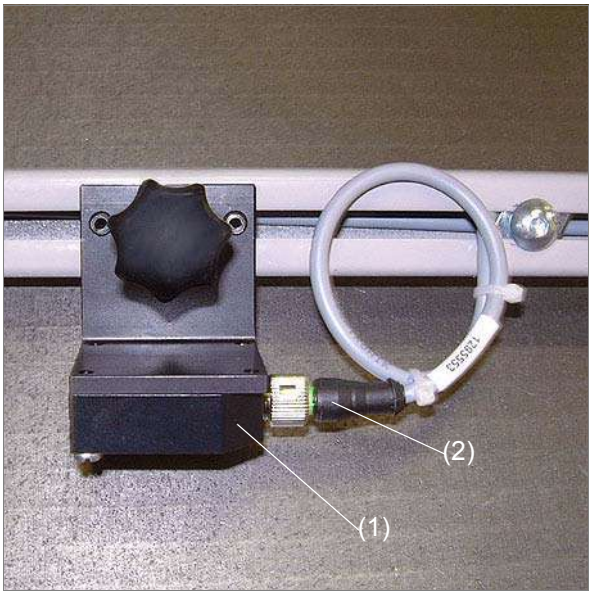

D_129_091_01

(1) Reflected light sensor
(2) Electrical connector plug

Fig. 9 Reflected light sensor, front

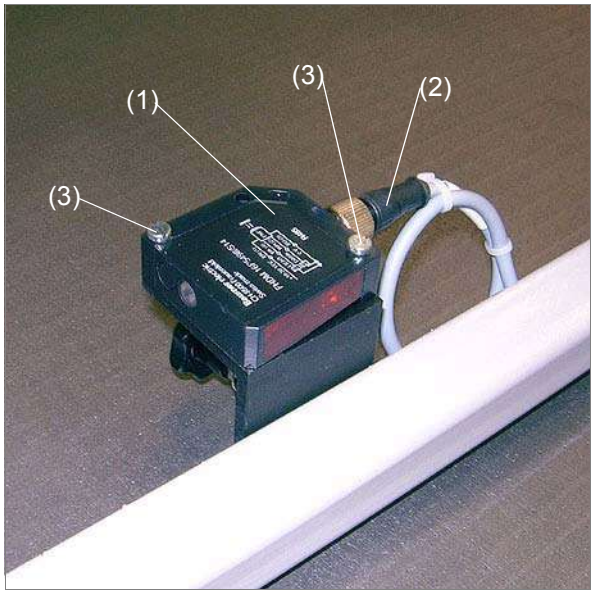

D_129_090_01

(1) Reflected light sensor
(2) Electrical connector plug
(3) Retaining screw

3.3 Replacing the web severer blade for the web severer

Requirements

- Production group / function group at standstill
- Read Chapt. 8.9 Carrying out repairs in Reg. 2 Important for your safety in the *System* file.
- Read Chapt. 4.4 Working in the tunnel / mobile terminal in Reg. 2 Important for your safety.

Materials needed

- Allen key set
- Forked wrench 0.39 in
- Oil stone
- Cleaning agent
- Soft cloth
- Warning sign *Work is in progress!*

WARNING	**Risk of injury!** **Injury through cuts** by advancing web severer! => De-allocate function group from the production group at the terminal and electrically disable (push the *SAFE-STOP* pushbutton). => Place *Work in progress!* warning signs on the corresponding terminals and control panels. => Reduce operating pressure on the concerned filter-regulator-lubricator unit to 0 bar. => Observe the danger zone of the web severer. => Touch web severer only when wearing protective gloves.

1. Loosen retaining screws (1) and remove profile bar (2) (Fig. 10).
2. Loosen retaining screws (6) and remove web severer blade (4) with cross-member (5).
3. Loosen retaining screws (3) and remove web severer blade (4).
4. Hone mounting surfaces of new web severer blade (4) with the oil stone.
5. Mount web severer blade (4).
6. Tighten retaining screws (3) with a tightening torque of 18 Nm.
7. Mount cross-member (5) and tighten with retaining screws (6).

8. Mount profile bar (2) and tighten with retaining screws (1).
9. Set pressure on the filter-regulator-lubricator unit to 6 - 6.5 bar.
10. Electrically enable function group with the *SAFE-STOP* pushbutton.
11. Remove *Work is in progress!* warning sign.

> The web severer blade is now replaced.

Fig. 10 Replacing the web severer blade

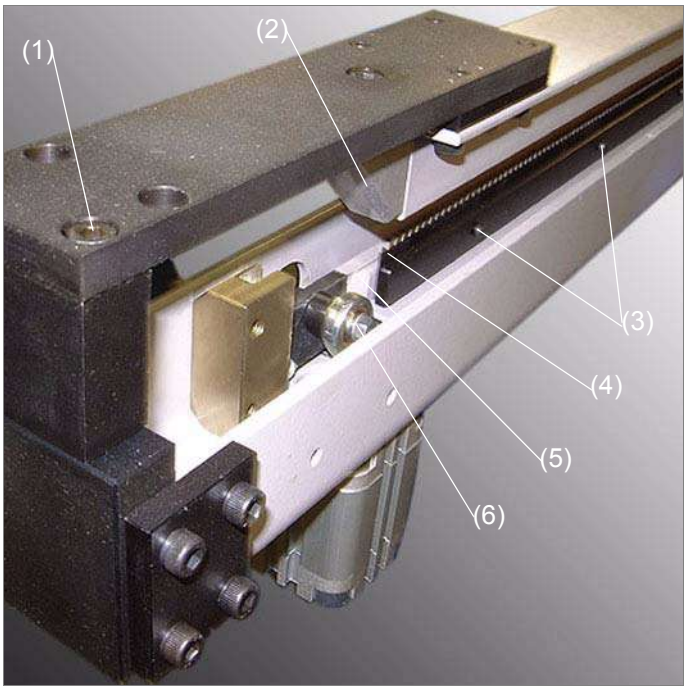

D_129_089_02

(1) Retaining screw
(2) Profile bar
(3) Retaining screw
(4) web severer
(5) Crossbeam
(6) Retaining screw

3.4 Replace components of the anti-reversing device

Requirements

- Production group / function group at a standstill
- Cause of damage recognized

Materials needed

- Hexagon key set
- External retaining ring pliers
- Rule
- Meter tape measure
- Mounting bracket (WIFAG drawing no. 1426862)
- K5 Loctite 641 adhesive / ergo 4401
- Chapt. 2 Using adhesives in Reg. 12 Mechanical assembly in System file
- Warning signs *Work is in progress!*
- Chapt. 1.3 Pneumatic system schematics in Reg. 8 Pneumatic system

⚠ WARNING	**Pressure rollers throwing on!** Risk of injury due to pulling in, catching and crushing! => Electrically disable function group (use the *SAFE-STOP* pushbutton). => Place *Work in progress!* warning signs on the corresponding terminals and control panels. => Before operation, ensure that no one is touching the anti-reversing device.

Remove the anti-reversing device

1. Tighten the mounting bracket (1) on both sides (Fig. 11).
2. Take off compressed air hose (2).
3. Loosen and remove clamp collars (3) and lift out the anti-reversing device (4).

Replace pneumatic cylinder

=> Set distance using adjusting screw (6).

Replace contact pressure rollers

WARNING	**Tensioned retaining rings!** Risk of eye injury if retaining rings fly off! => Wear safety goggles when installing and removing retaining rings.

=> Always replace all pressure rollers (7) at the same time.

=> Prior to dismantling the complete pressure rollers (7), mark the postions on the square pipe (8).

Mounting anti-reversing device

1. Lift in the anti-reversing device (4), mount the clamp collars (3) and slightly tighten.
2. Insert compressed air hose (2).
3. Remove mounting bracket (1).

Fig. 11 Replace components of the anti-reversing device

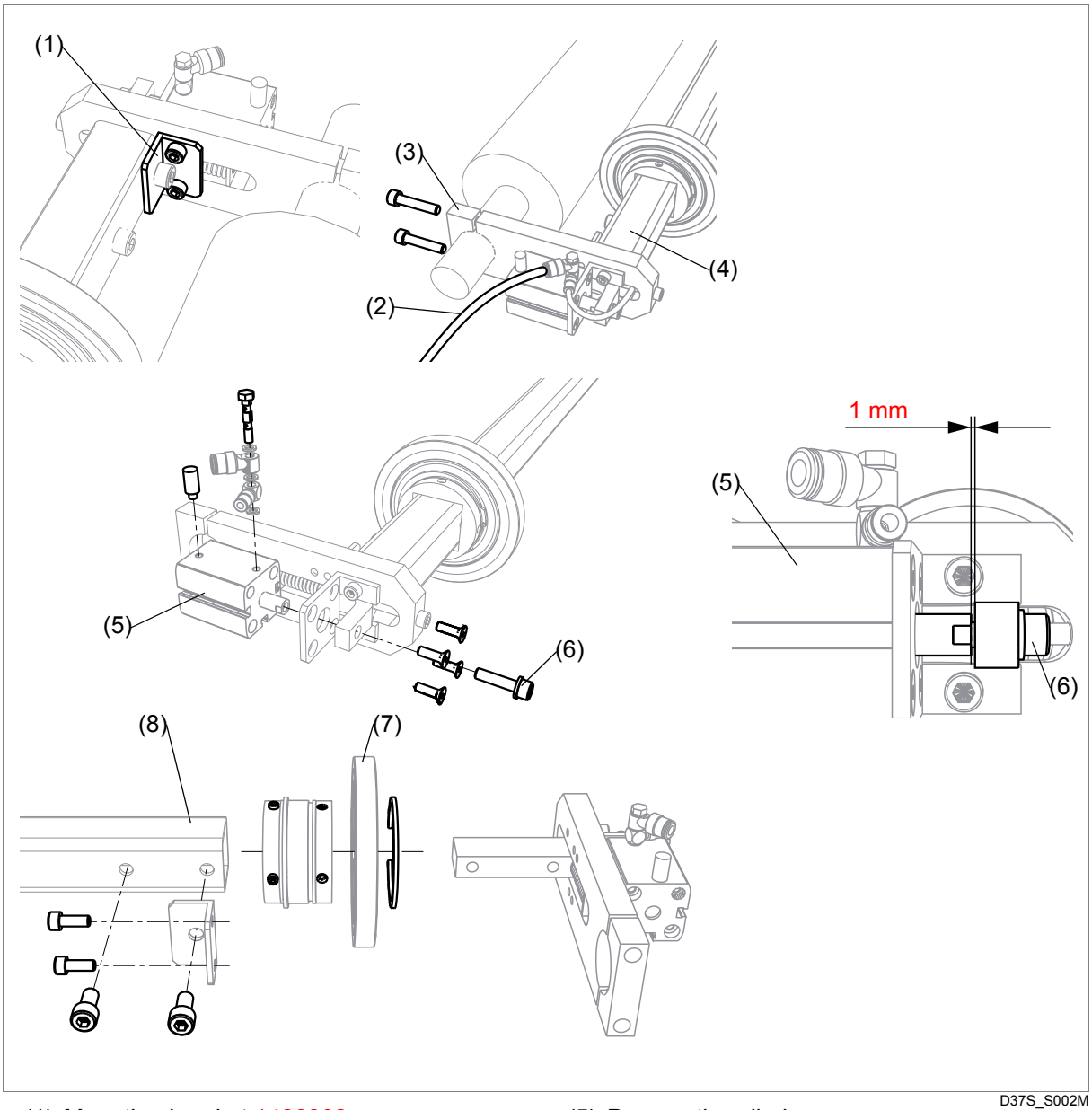

(1) Mounting bracket 1426862
(2) Compressed air hose
(3) Clamp collars
(4) Anti-reversing device
(5) Pneumatic cylinder
(6) Retaining screw locked K5 adhesive set: 1 mm
(7) Pressure roller
(8) Square pipe

Setting anti-reversing device

1. Turn the anti-reversing device at the highest point on the paper wrapping on the carrier roller (1) and tighten retaining screws (4) (Fig. 12).
2. Set the initial tension of the compression springs on the adjusting screws (5).

> Position ON: The pressure rollers are pressed on the carrier roller

> Position OFF: The pressure rollers are thrown off of the carrier roller by approximately 10 mm

3. Turn back setscrews (C);(D), position the pressure rollers (3) laterally and tighten with the setscrews (A);(B).
4. Tighten setscrews (C);(D).
5. With the pressure regulating valve, set the operating pressure to 4 bar.
6. Throw on pressure rollers (3).
7. Compare the contact pressure of the inner pressure roller (3) with the contact pressure of both outer pressure rollers (3) using paper strip.
8. Slide the inner pressure roller (3) with the setscrews (B);(D) until the contact pressure is equal at all pressure rollers (3).

> The anti-reversing device is ready for use.

Fig. 12 Setting anti-reversing device

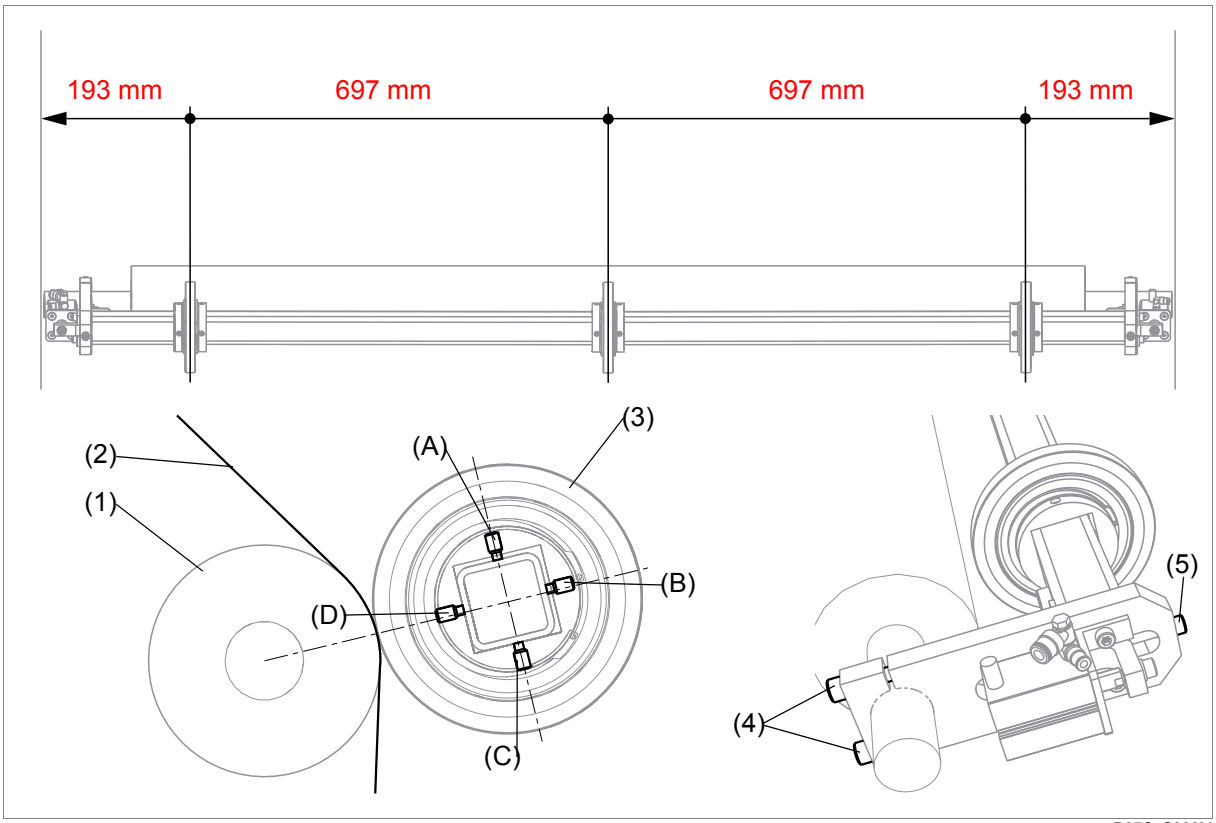

(1) carrier roller
(2) Paper web
(3) Pressure roller
(4) Retaining screw
(5) Adjustable compression spring

(A) Setscrew
(B) Setscrew
(C) Setscrew
(D) Setscrew

3.5 Replacing the brake segment for the carrier roller brake

Requirements

- Production group / function group at standstill
- Read Chapt. 8.9 Carrying out repairs in Reg. 2 Important for your safety in the *System* file.
- Read Chapt. 4.4 Working in the tunnel / mobile terminal in Reg. 2 Important for your safety.

Materials needed

- Allen key set
- Warning sign *Work is in progress!*

⚠ WARNING	**Risk of injury!** **Risk of being trapped and crushed** by rotating rollers and cylinders! => De-allocate function group from the production group at the terminal and electrically disable (push the *SAFE-STOP* pushbutton). => Place *Work in progress!* warning signs on the corresponding terminals and control panels.

1. Loosen retaining screws (4) and remove entire carrier roller brake (Fig. 13).
2. Turn setscrew (5) clockwise and remove brake segment (1).
3. Install new brake segment (1).
4. Install carrier roller brake and tighten with retaining screws (4).

5. Electrically enable function group with the *SAFE-STOP* pushbutton.
6. Remove *Work is in progress!* warning sign.

> The brake segment is now replaced.

Fig. 13 Carrier roller brake

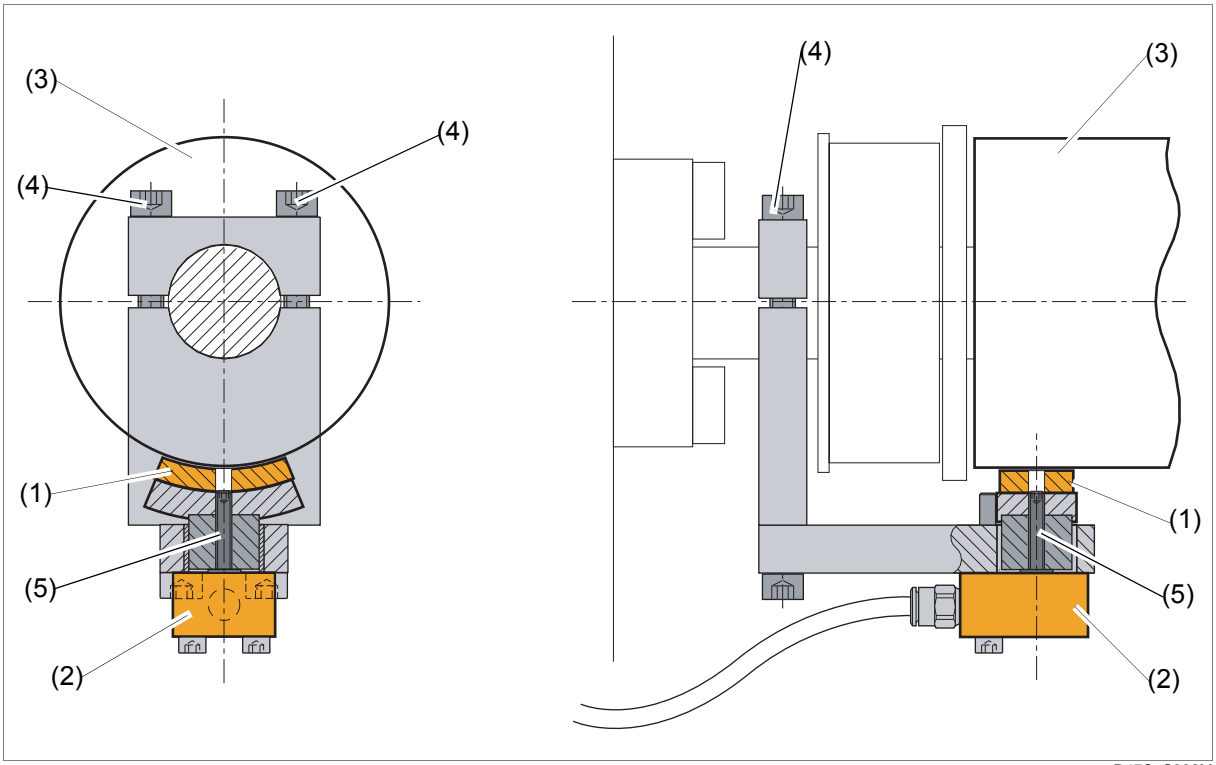

(1) Brake segment
(2) Pneumatic cylinder
(3) carrier roller
(4) Retaining screw
(5) Setscrew

3.6 Replace pneumatic cylinder

Note

For further information about the replacement work see Chapt. 3.8 Replace pneumatic cylinder in Reg. 8 Pneumatic system in the *System* file.

4 Basic settings

Contents

This chapter contains the following information:

- Chapt. 4.1 Setting
- Chapt. 4.2 Calibration
- Chapt. 4.3 Testing

Specification

For safety reasons only the adjustment work described in these operating instructions may be performed! All adjustment work not described herein must be performed by qualified WIFAG personnel.

4.1 Setting

4.1.1 Set position of the reflected light sensor

Requirements

- Reflected light sensor is clean
- Infrared light beam is visible

Materials needed

- Webbing diagrams
- Matt black paper strip
- Cord
- Warning signs *Work is in progress!*
- Drawing no. 1428522 1432851 1415408 (Positions of reflected light sensors)
- Chapt. 4.3.1 Test reflected light sensors

WARNING	
	Risk of injury! **Risk of being trapped and crushed** by rotating rollers and cylinders! => De-allocate function group from the production group at the terminal and electrically disable (push the *SAFE-STOP* pushbutton). => Place *Work in progress!* warning signs on the corresponding terminals and control panels.

Set position of the reflected light sensor

1. Slightly tension drawn-in web (4) (Fig. 14).

If no web (4) is drawn in:

=> Feed in cord in the appropriate section in accordance with the webbing diagrams.

2. Slightly loosen handle (2).
3. Move reflected light sensor (1) accordingly.
4. Tighten handle (2).

Test the reflected light sensor

5. Test reflected light sensors (Chapt. 4.3.1 Test reflected light sensors).
6. Electrically enable function group with the *SAFE-STOP* pushbutton.
7. Remove *Work is in progress!* warning sign.

> The position is set.

Fig. 14 Set position of the reflected light sensor (example)

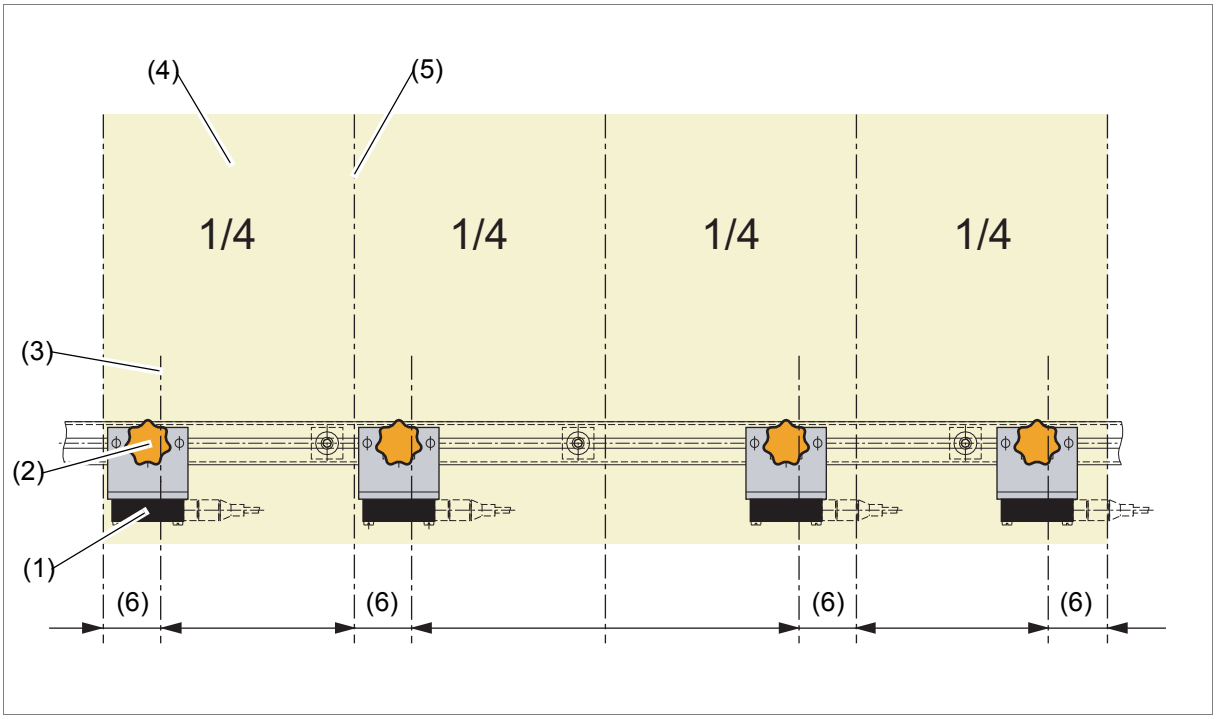

(1) Reflected light sensor
(2) Handle for arrester
(3) Optical axis
(4) Paper web
(5) ¼ web separation
(6) Distance according to drawing

4.1.2 Setting anti-reversing device

Note

Further information is available in the following chapters:

- Chapt. 3.4 Replace components of the anti-reversing device

4.2 Calibration

Note

No calibrations are necessary on this sub-function group.

4.3 Testing

4.3.1 Test reflected light sensors

Requirements

- Reflected light sensor is clean
- Infrared light beam is visible

Materials needed

- Matt black paper strip
- Warning signs *Work is in progress!*

⚠ WARNING	**Risk of injury!** **Risk of being trapped and crushed** by rotating rollers and cylinders! => De-allocate function group from the production group at the terminal and electrically disable (push the *SAFE-STOP* pushbutton). => Place *Work in progress!* warning signs on the corresponding terminals and control panels.

1. Hold matt black paper strip (5) according to the distances specified in (Fig. 15) in front of the reflected light sensor (1) and check the status display (2).

If the result specified in (Fig. 15) is not achieved:

The reflected light sensor (1) is not correctly set or not connected.

=> Check the power supply connection.

=> Carry out another function check.

2. Electrically enable function group with the *SAFE-STOP* pushbutton.
3. Remove *Work is in progress!* warning sign.

Fig. 15 Function check

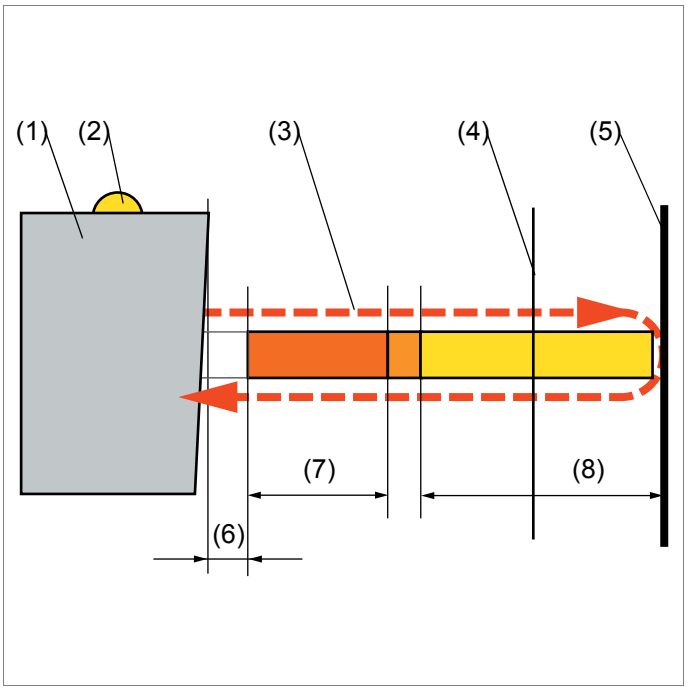

CWS_033

(1) Reflected light sensor
(2) LED (status display)
(3) Infrared light beam
(4) Paper web
(5) Matt black paper strip
(6) Distance 0 - 5 mm:
LED not lit = *OFF* or paper not in measuring range
(7) Distance 5 - 15 mm:
LED flashes = reflected light sensor is dirty
(8) Distance 20 - 100 mm:
LED continuously lit = paper in normal measuring range

4.3.2 Testing the web monitoring system

Note

Function check of the web monitoring system according to Chapt. 6.1 Web monitoring test in Reg. 4 Operation in the *Anlage* file.

20 Color register controller (optional)

1 Overview **20.3**

2 Construction and function **20.4**
2.1 Register mark fields **20.4**
2.2 Regulation process **20.7**
2.2.1 Function 20.7
2.2.2 Manual adjustment of the register mark error 20.8
2.2.3 Automatic selection of the register mark field 20.8
2.2.4 Manual selection of the register mark field 20.9
2.2.5 Switch the color register controller on/off 20.10
2.3 Control system **20.11**
2.4 Measuring module **20.13**
2.5 Linear unit **20.15**

3 Replace components **20.16**
3.1 WIFAG article numbers **20.16**
3.2 Replace flash lamp **20.17**
3.3 Replace supply unit **20.22**
3.4 Replace linear unit **20.27**
3.5 Replace SYMAC processor **20.30**

4 Basic settings **20.31**
4.1 Setting **20.31**
4.2 Calibration **20.31**
4.3 Testing **20.31**

5 Troubleshooting **20.32**
5.1 Malfunction indicators **20.32**
5.2 Malfunctions and troubleshooting **20.32**

1 Overview

The color register control automatically corrects circumferential register and sidelay register deviations of the printing couple based on the printed register marks (3) (Fig. 1).
The register marks (3) are read by the measuring modules (4) and evaluated in the control processor. The deviations are then corrected by circumferential register displacements (by means of printing couple drives) and the sidelay register adjustment. For each web (6) two measuring modules (4) are used (recto and verso). The measuring modules (4) are automatically positioned by the linear units (5).

Fig. 1 Overview of color register controller

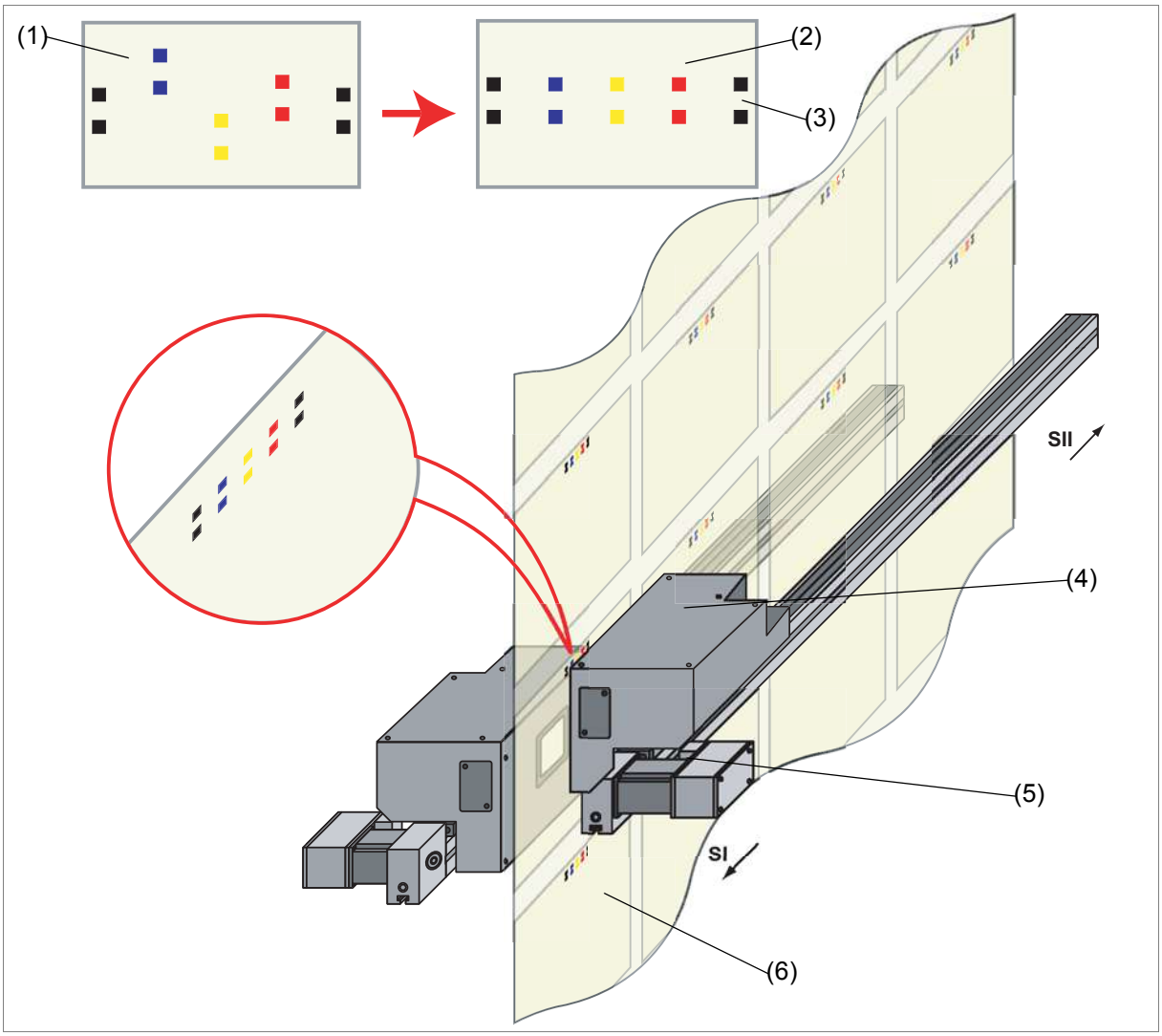

D47e_V001E

(1) Register mark field with deviations (Chapt. 2.1 Register mark fields)
(2) Register mark field without deviations (Chapt. 2.1 Register mark fields)
(3) Register mark (Chapt. 2.2 Regulation process)
(4) Measuring module (Chapt. 2.4 Measuring module; Chapt. 2.3 Control system)
(5) Linear unit (Chapt. 2.5 Linear unit, Chapt. 2.3 Control system)
(6) Paper web

2 Construction and function

Contents

This chapter contains the following information:

- Chapt. 2.1 Register mark fields
- Chapt. 2.2 Regulation process
- Chapt. 2.3 Control system
- Chapt. 2.4 Measuring module
- Chapt. 2.5 Linear unit

2.1 Register mark fields

Function

The color register controller system consists of a camera with integrated image-processing software for each web side. The camera detects the register mark field and measures the relative position of the register marks to each other. Therefore, the register marks *must* be correctly positioned.

Fig. 2 Standard register mark field

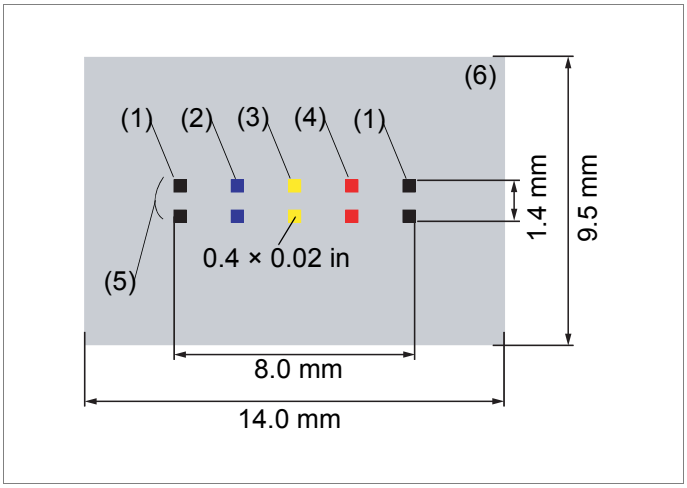

D47e_V005E_01

(1) Black (reference register marks)
(2) Magenta
(3) Yellow
(4) Cyan
(5) Register mark pair
(6) White area

Composition of the standard register mark field

A register mark field consists of register marks and a non-printed white area (6) (Fig. 2). The white area (6) is needed to be able to still detect the register marks if there are deviations. The register marks consists of register mark pairs (5) that form a pattern. Each register mark pair (5) is printed in a certain color. The two outer register mark pairs (5) form the two reference register marks (1). The reference register marks (1) are black. All other register mark positions are measured out by the camera relative to the reference register marks (1).

Specification

- The size, spacing and shape of the register marks must not be changed (Fig. 2).
- The register marks must applied straight.
- The color sequence must be maintained.
- The white area must be fully within the printable area (impression area) (Fig. 3).

Positioning of the register mark field on the plate

Fig. 3 Placement of the register mark field

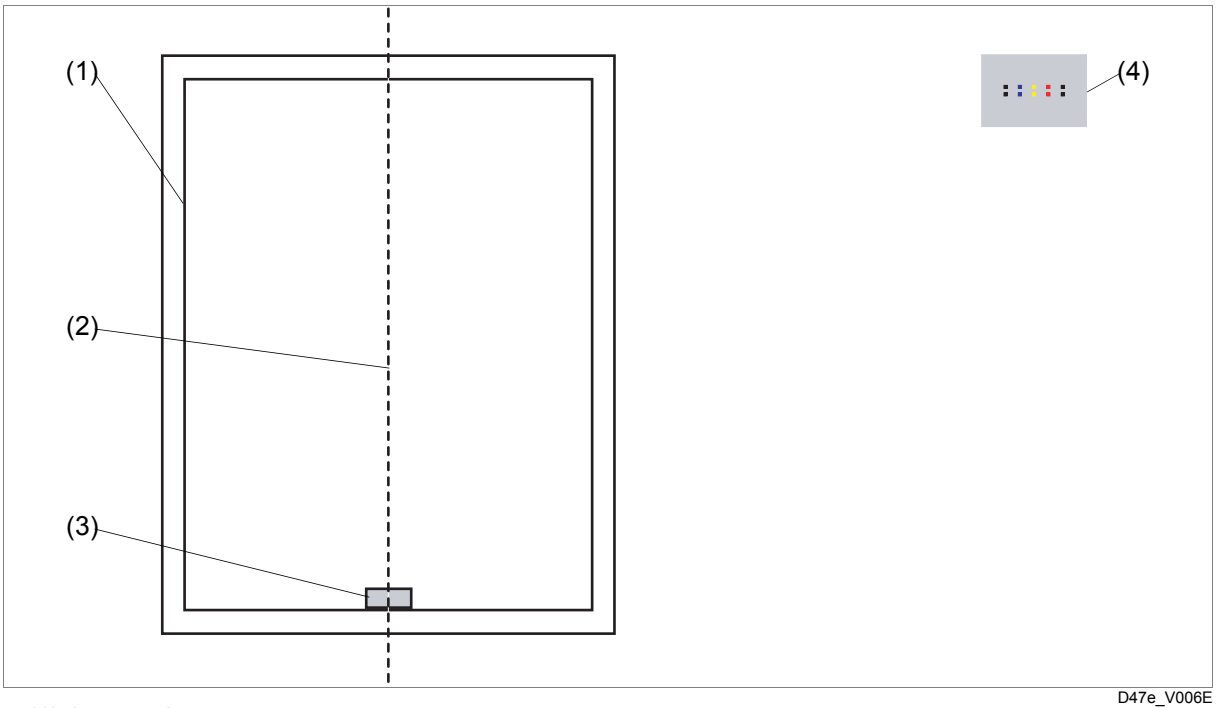

(1) Impression area
(2) Center of print form
(3) Register mark field
(4) Representation of the register mark field on a scale of 1:1

Note

WIFAG recommends that the register mark field (3) is placed at the bottom in the middle of the printing plate (Fig. 3). The middle of the printing plate is adequately supplied with ink through ink distribution even when the ink metering in the middle is closed. With very thin paper it may be necessary to offset the register mark field (3) laterally from the print form middle (2) (recto / verso show-through).

2.2 Regulation process

2.2.1 Function

The measuring head of the color register controller detects the current deviation (register error) on the register mark field (1) (Fig. 4). This deviation is passed on to the printing couples as the dimension to be regulated.

Tab. 1 Register marks in the standard register mark field

Type	Colors	Number of register marks
Regulated register marks (colors)	Magenta, yellow, cyan	2 per color
Reference register marks	black	4 (2 left and right next to the regulated ones)

The aim of the color register controller is to align the regulated register marks (2) to the reference register marks (3). The printing couple with the reference register marks is not actuated. Only the printing couples of the regulated register marks (2) are corrected. The arrows show the directions the color register controller corrects the individual deviations.

Fig. 4 Regulation of register mark field

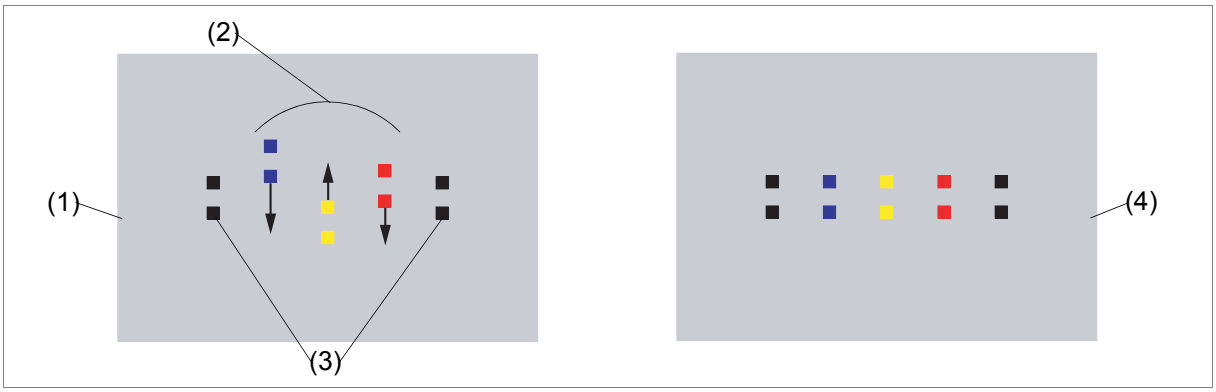

(1) Register mark field with register errors
(2) Regulated register marks (colors)
(3) Reference register marks
(4) Resolved register mark field

2.2.2 Manual adjustment of the register mark error

If register errors occur due to mechanical tolerances that are not compensated by the regulation system, the register (circumference and sidelay register) can be manually corrected from the terminal. The manually adjustment of the color register controller will be maintained until the next time the controller is switched on and off.

> **Specification**
> Do not use the color of the reference register marks for manual adjustment! This adjustment influences the recto/verso printing as well as the cutting position control.

2.2.3 Automatic selection of the register mark field

The color register controller checks only in register mark field (1). The automatic control system evaluates the color information of the image data server and the production computer. Based on the color imposition and the priority, a register mark field (1) is selected to regulate (Fig. 5).

Fig. 5 Priority sequence of the register mark fields

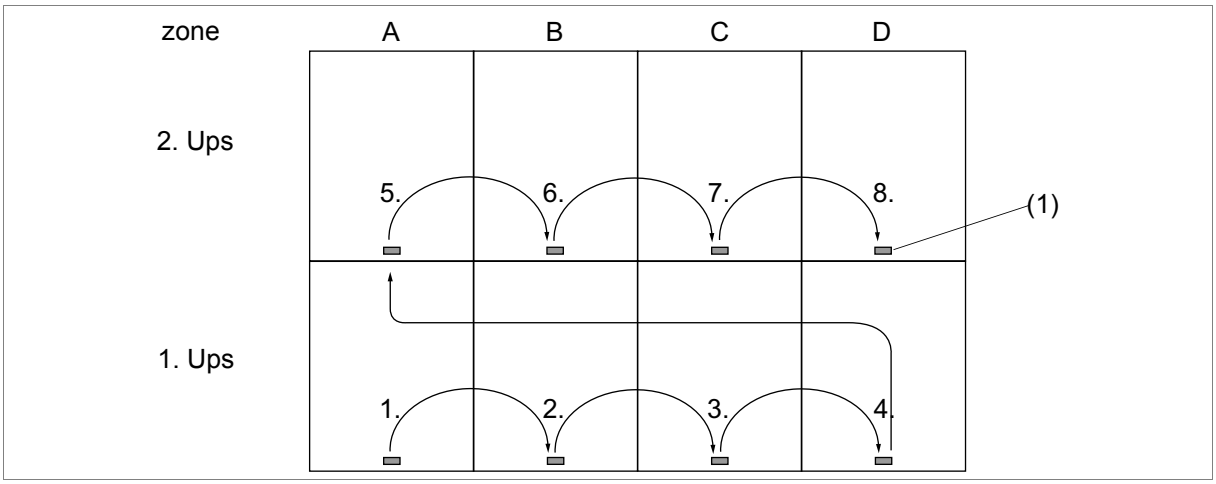

(1) Register mark field

Tab. 2 Example of how a register mark field is selected

zone	Ups	Number of colors	Priority	Available colors
A	1	3	1	Cyan, magenta, black
A	2	3	5	Yellow, magenta, black
B	1	1	2	Black
B	2	1	6	Black
C	1	4	3	Cyan, magenta, yellow, black
C	2	4	7	Cyan, magenta, yellow, black
D	1	4	4	Cyan, magenta, yellow, black
D	2	4	8	Cyan, magenta, yellow, black

The ups of zones C and D have the most colors. The 1st up of zone C has the highest priority. Therefore, the automatic control system selects the register mark field C1.

2.2.4 Manual selection of the register mark field

If, for example, the automatic control has selected an unfavorable Zone, you can select another zone and up from the terminal. This manual override remains in effect until the next production or updating.

Important!

=> When selecting another zone and up, try to ensure that *all* colors are present! Otherwise one or more colors will not be regulated.

2.2.5 Switch the color register controller on/off

When the regulation is switched off, all controlled variables are lost (Fig. 6). The circumferential and sidelay register is reset to the unregulated preset value. When the regulation is switched on again, the current preset values are adjusted by the regulation until there is a resolved register mark field. If register marks are not visible to the camera during printing, the last correction value is kept constant.

> **Specification**
>
> Do not use the color of the reference register marks for manual adjustment! This adjustment influences the recto/verso printing as well as the cutting position control.

Fig. 6 Color register control behavior

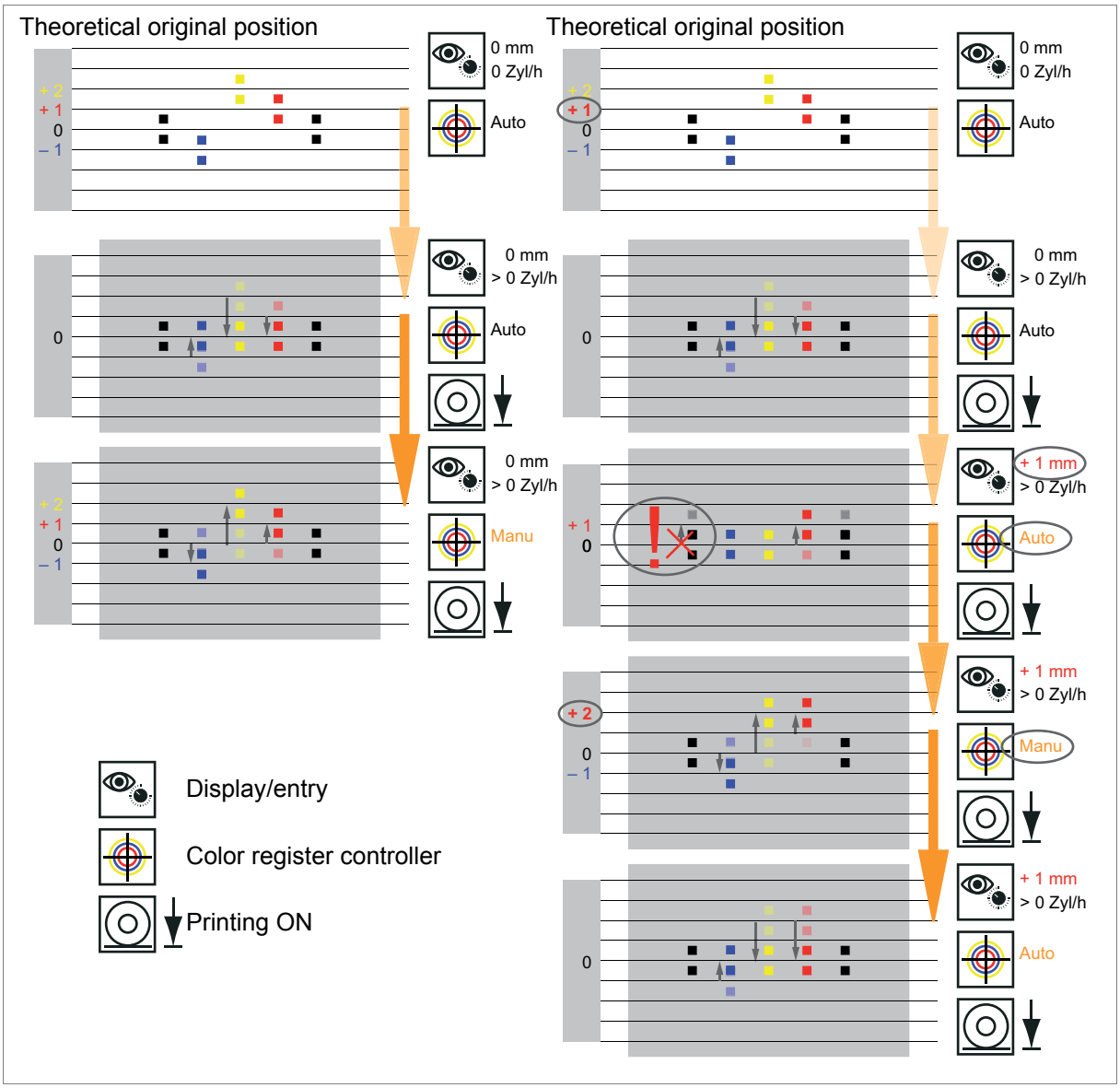

2.3 Control system

The measuring modules and linear units are actuated from the FRR switchgear cabinet (**c**olor **r**egister **c**ontroller cabinet) (Fig. 7).
Control of the camera is directly via the Ethernet. Each camera has its own address which is assigned only by WIFAG. A defective camera must therefore be replaced and configured by WIFAG.

Note

Further information about the control system is found in the following documents:

- Chapt. 2.5 Electrical components in general in Reg. 7 Electrical and control systems in the *System* file
- Chapt. 2.4 Special electrical components in Reg. 7 Electrical and control systems in the *System* file
- Chapt. 2.2 Bus systems in Reg. 7 Electrical and control systems in the *System* file
- *FFR electrical circuit diagram*

Fig. 7 Overview of color register controller control system

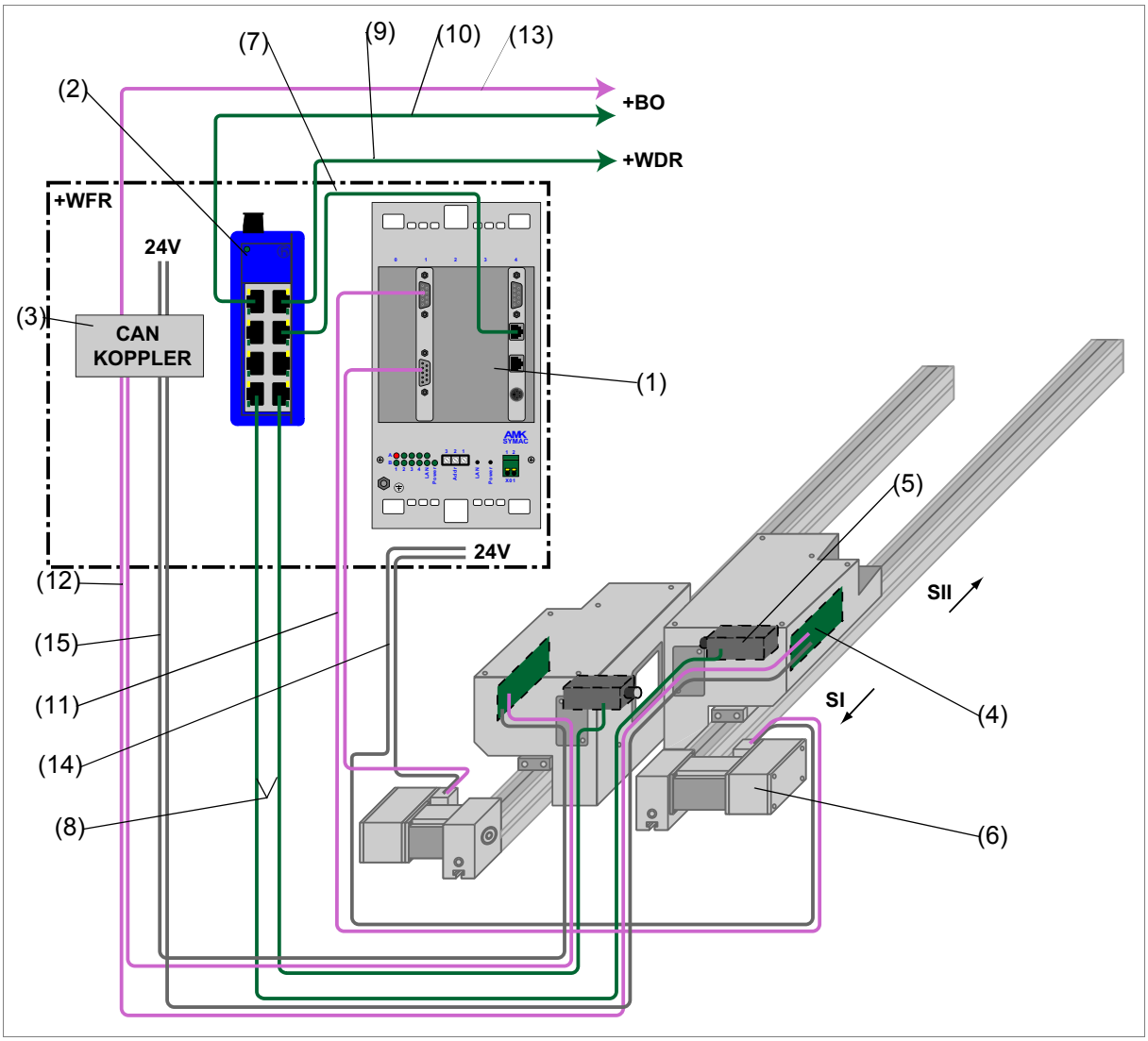

D47e_V002E_01

(1) SYMAC processor (AS-CP21)
(2) Ethernet switch
(3) CAN coupler (bus coupler)
(4) CAN FRR application converter (FRR = color register controller) measuring module
(5) Camera measuring module
(6) Linear unit step motor
(7) Ethernet connection (SYMAC > Ethernet switch)
(8) Ethernet connection (Ethernet switch > camera)
(9) Ethernet connection (Ethernet switch > switchgear cabinet +FDR [FDR = color density controller])
(10) Ethernet connection (Ethernet switch > switchgear cabinet +BO [BO = upper bridge])
(11) CAN bus (SYMAC > linear unit step motor)
(12) CAN bus (CAN coupler > CAN FRR measuring module)
(13) CAN bus (CAN coupler > switch gear cabinet +BO [BO = upper bridge])
(14) 24 VDC power supply (step motor > power supply unit)
(15) 24 VDC power supply (CAN coupler > CAN FRR)

2.4 Measuring module

The measuring module detects the printed register marks on the web. The register marks are read by the camera (11) and processed (Fig. 8). So that the camera (11) can read the register marks, the web is lit with the flash module (8). The lighting is done synchronous to the machine speed.

Fig. 8 Construction of measuring module (left / 2)

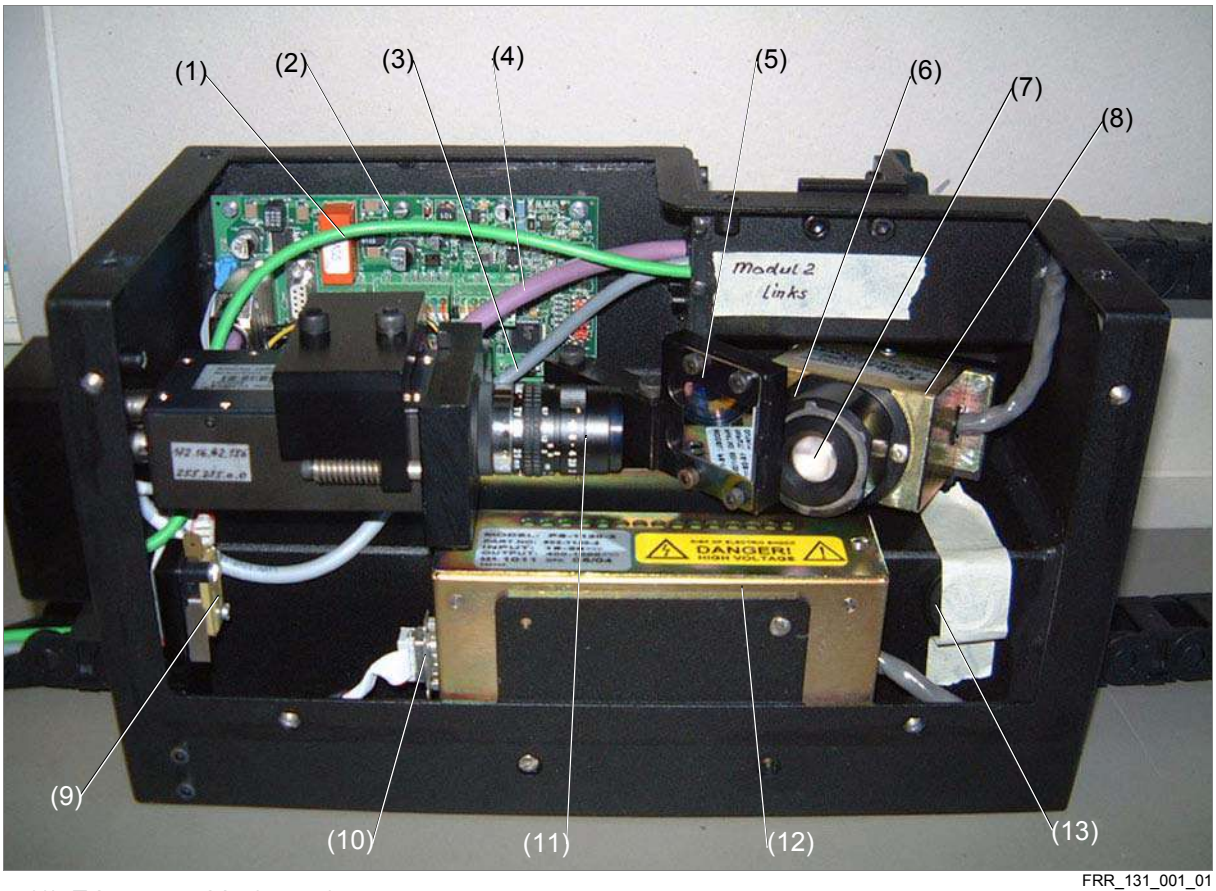

FRR_131_001_01

(1) Ethernet cable (green)
(2) Application converter CAN-FRR
(3) Power cable (gray)
(4) CAN bus cable (violet)
(5) Mirror
(6) Lens
(7) lamp
(8) Flash module
(9) Limit switch for cover
(10) Sub-D connector for power unit
(11) Camera
(12) Power unit for flash module
(13) Camera lens cover

Fig. 9 Measuring module closed (left / 2)

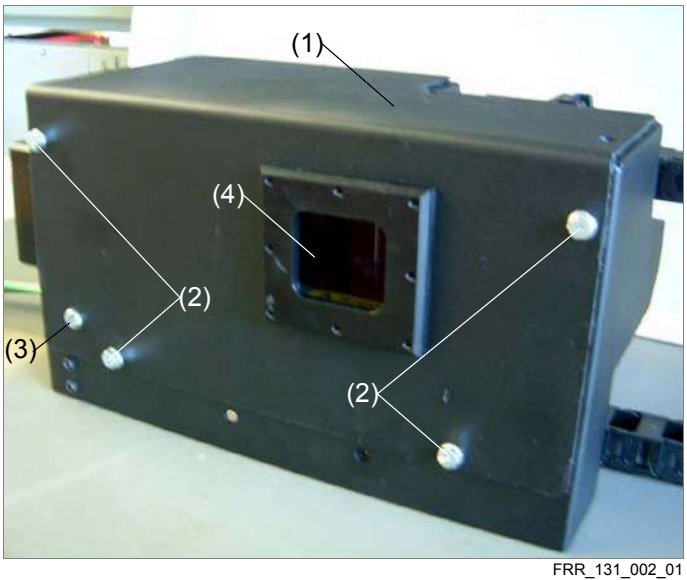

FRR_131_002_01

(1) Cover
(2) Screws for cover
(3) Screw for limit switch cover
(4) View window

There are left (1) and right measuring modules (2) (Fig. 10).
They are also called module 1 and module 2.

Fig. 10 Left and right measuring module

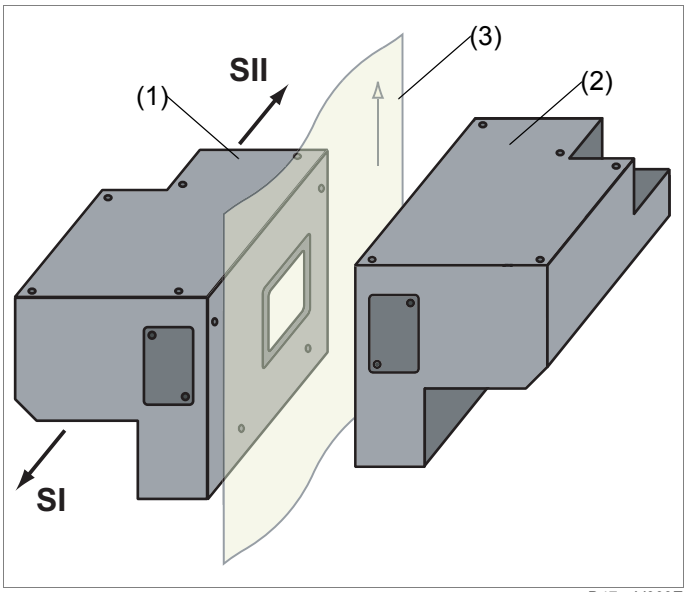

D47e_V003E

(1) Left module (module 2)
(2) Right module (module 1)
(3) Paper web

2.5 Linear unit

So that the printed register marks on each zone can be detected, the measuring module is automatically positioned to the web with the linear unit (Fig. 11).

Fig. 11 Design of linear unit (left)

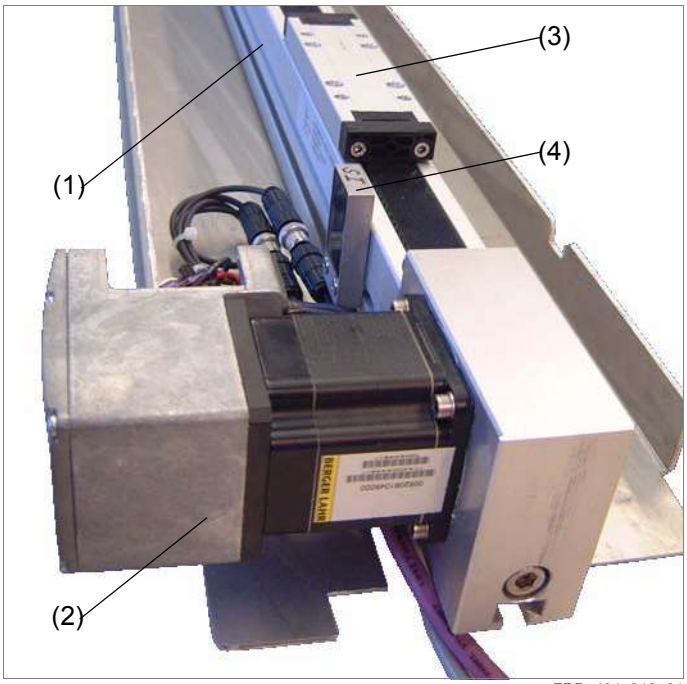

FRR_131_018_01

(1) Guide rail
(2) Step motor
(3) Carriage
(4) Limit switch

There are left (1) and right linear units (2) (Fig. 12). They are also used to position the measuring modules of the color density regulator.

Specification

The linear units must be replaced as **complete** units. Repair work on the step motor of guide rail may be carried out only by qualified personnel!

Fig. 12 Left and right linear unit

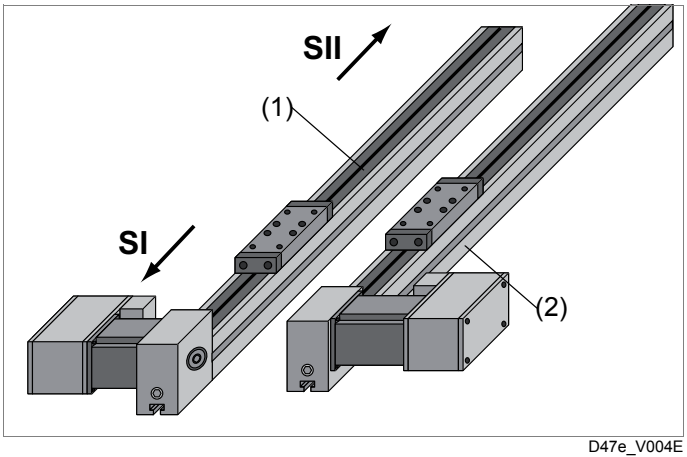

D47e_V004E

(1) Left linear unit
(2) Right linear unit

3 Replace components

Contents

This chapter contains the following information:

- Chapt. 3.1 WIFAG article numbers
- Chapt. 3.2 Replace flash lamp
- Chapt. 3.3 Replace supply unit
- Chapt. 3.4 Replace linear unit
- Chapt. 3.5 Replace SYMAC processor

Specification

For safety reasons only the replacement work described in these operating instructions may be performed! All replacement work not described herein must be performed by qualified WIFAG personnel.

3.1 WIFAG article numbers

Tab. 3 Overview of components and accessories

Article	Obtainable only from WIFAG	Can be ordered from WIFAG
Flash trigger module	1299429	----------
Flash lamp	1299431	----------
Camera	1299427	----------
Flash module supply unit	114450	----------
Linear unit, left*	1432936	----------
Linear unit, right*	1432939	----------
SYMAC processor	1378802	----------
Application converter CAN-FRR for measuring module	1302970	----------

* format-related, see spare parts drawings

3.2 Replace flash lamp

Requirements

- Work on the electrical system may be performed only by specially trained **technicians**.
- Production group / function group at standstill
- Read Chapt. 8.9 Carrying out repairs in Reg. 2 Important for your safety in the *System* file.

Materials needed

- Allen key set
- Warning signs *Work is in progress!*
- Screwdriver no. 1
- Screwdriver no. 4
- Ratchet set

DANGER	**Danger!** Risk of a lethal electric **surge**! => Work on electrical switching plants may be carried out only by personnel with the relevant training. => Observe instructions in Chapt. 8.5 Switch off power supply of the system parts in Reg. 2 Important for your safety. => Before touching electrical components, ensure that the power to the function group is switched off and check with a voltmeter.

WARNING	**Risk of injury!** **Risk of being trapped and crushed** by moving linear unit! => Perform cleaning and repair work only in cleaning position. => Observe the danger zone of the linear unit. => Do not reach with your hands behind the guard or at the side on the measuring module.

Remove flash lamp

1. Disconnect the measuring module from the voltage according to WIFAG *electrical circuit diagram*.
2. Loosen screws (2) and remove cover (1) (Fig. 13).

Fig. 13 Measuring module closed (left / 2)

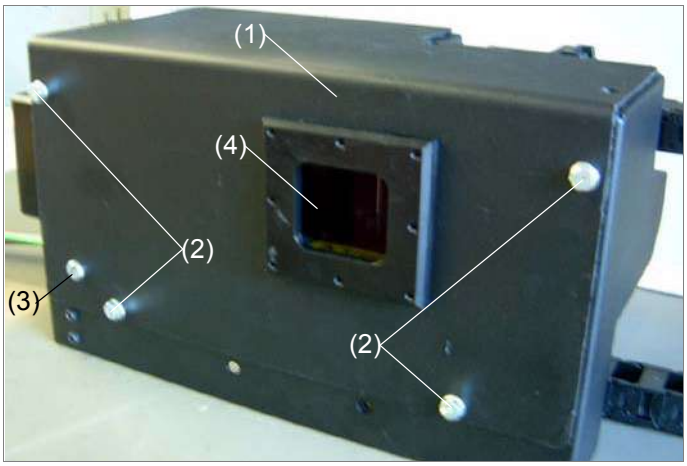

FRR_131_002_01

(1) Cover
(2) Screws for cover
(3) Screw for limit switch cover
(4) View window

CAUTION	**Machine damage!** Damage to **mirror, camera lens, and flash lamp** due to touching! => Touch and clean parts only with a soft fiber-free cloth. => Do not use cleaning agents.

3. Remove fitting screws (1) to mirror (2) (Fig. 14).
4. Remove mirror.

Fig. 14 Remove mirror

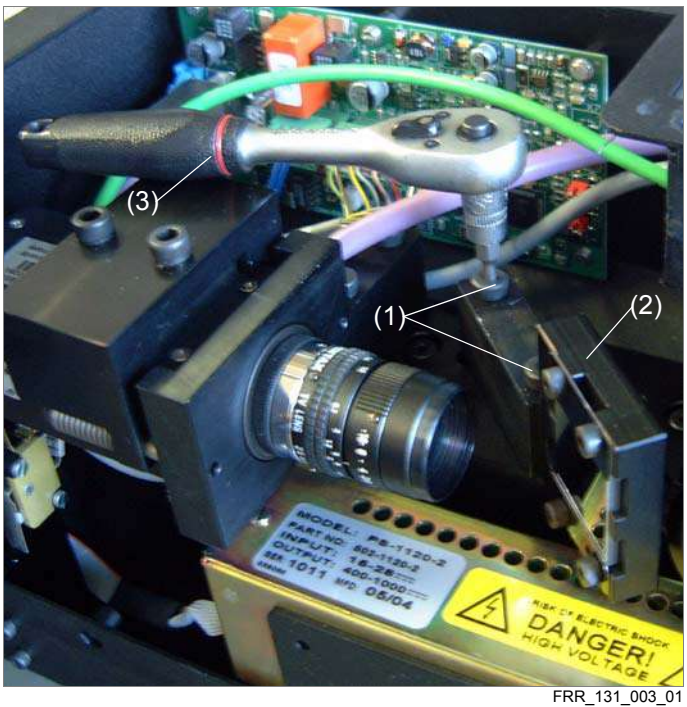

FRR_131_003_01

(1) Fitting screws for mirror
(2) Mirror
(3) Ratchet

CAUTION	**Machine damage!** Damage to **threads** due to wrong thread type! => Use only screws with English threading.

5. Loosen special screws (1) (Fig. 15).
6. Remove lens (2).

Fig. 15 Remove lens

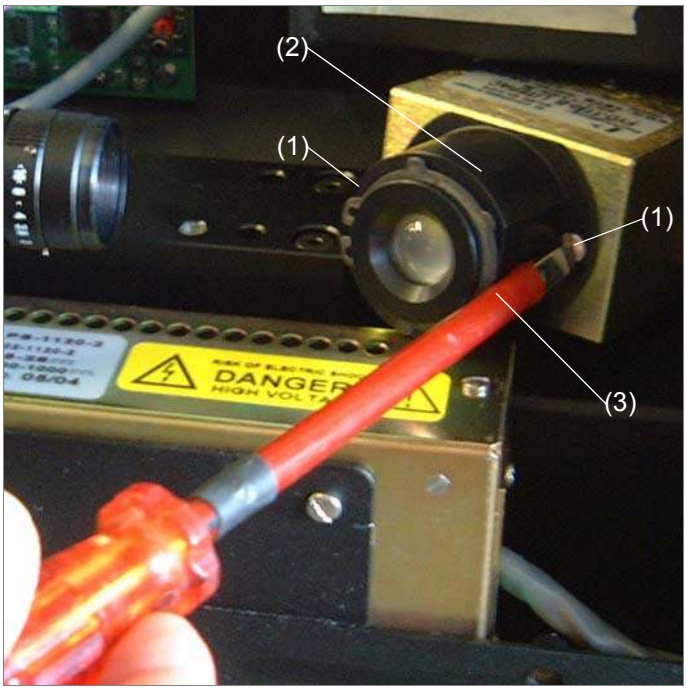

FRR_131_004_01

(1) Special screws for lens
(2) Lens
(3) Screwdriver

7. Pull off defective flash lamp (2) from flash module (1) (Fig. 16).

Fig. 16 Remove flash lamp

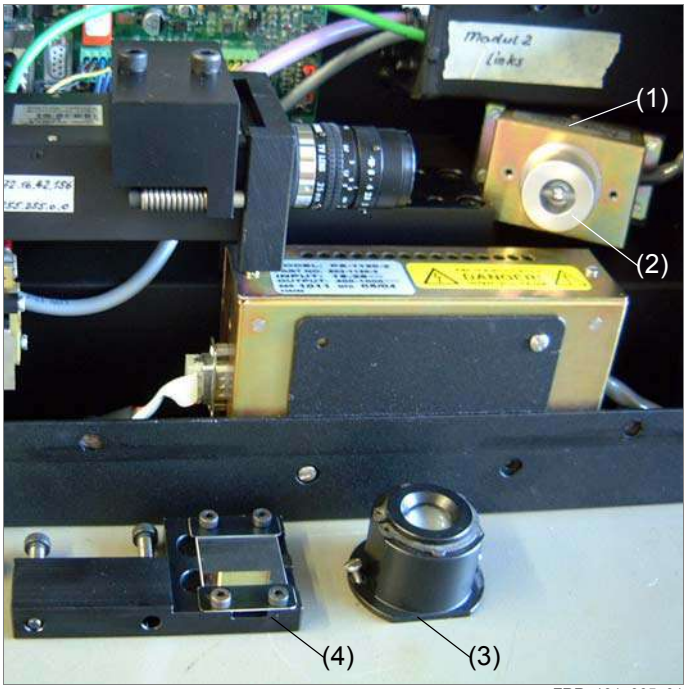

FRR_131_005_01

(1) Flash module
(2) Flash lamp
(3) Lens
(4) Mirror

Install flash lamp

CAUTION	**Machine damage!** The new device must have the **same rating designation** (performance and type) as the old device. => Compare the WIFAG inventory number and rating plate.

8. Take the new flash lamp (1) and protective plastic foam (2) out of the package (Fig. 17).
9. Place the new flash lamp (1) with the protective plastic foam (2) onto the flash module (3).
10. Carefully press the flash lamp (1) with the protective plastic foam (2) to the stop of the flash module (3).
11. Remove protective plastic foam (2).

Fig. 17 Install flash lamp

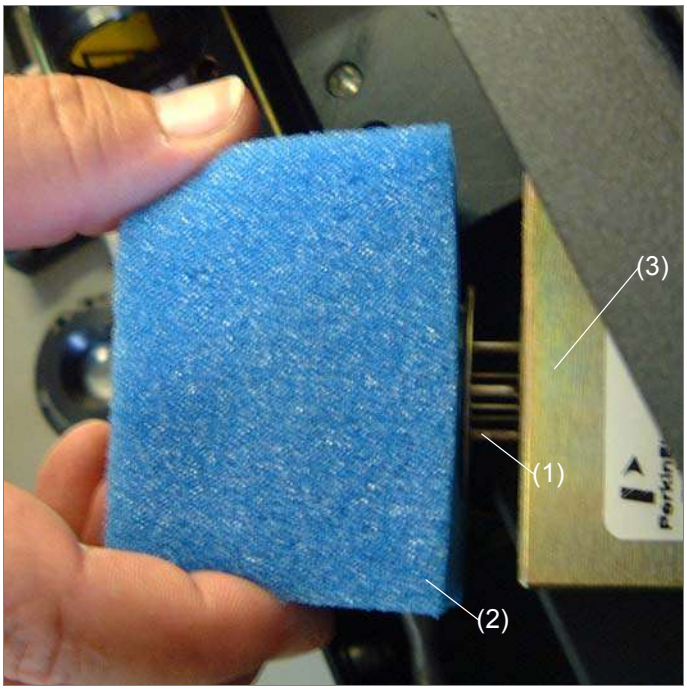

FRR_131_006_01

(1) Flash lamp
(2) Protective plastic foam
(3) Flash module

12. Mount lens (2) (Fig. 15).
13. Screw in special screws (1) for lens (2).
14. Mount mirror (2) (Fig. 14).
15. Screw in fitting screws (1) to mirror (2).
16. Mount cover (1) and tighten with the screws (2) (Fig. 13).
17. Remove *Work is in progress!* warning sign.
18. Switch on voltage in accordance with WIFAG *electrical circuit diagram*.

> The flash lamp is replaced.

3.3 Replace supply unit

Requirements

- Work on the electrical system may be performed only by specially trained **technicians**.
- Production group / function group at standstill
- Read Chapt. 8.9 Carrying out repairs in Reg. 2 Important for your safety in the *System* file.

Materials needed

- Allen key set
- Warning signs *Work is in progress!*
- Screwdriver no. 1
- Screwdriver no. 4
- Ratchet set

DANGER	**Danger!** Risk of a lethal electric **surge**! => Work on electrical switching plants may be carried out only by personnel with the relevant training. => Observe instructions in Chapt. 8.5 Switch off power supply of the system parts in Reg. 2 Important for your safety. => Before touching electrical components, ensure that the power to the function group is switched off and check with a voltmeter.

WARNING	**Risk of injury!** **Risk of being trapped and crushed** by moving linear unit! => Perform cleaning and repair work only in cleaning position. => Observe the danger zone of the linear unit. => Do not reach with your hands behind the guard or at the side on the measuring module.

Remove camera

1. Disconnect the measuring module from the voltage according to WIFAG *electrical circuit diagram*.
2. Loosen screws (2) and remove cover (1) (Fig. 18).

Fig. 18 Measuring module closed (left / 2)

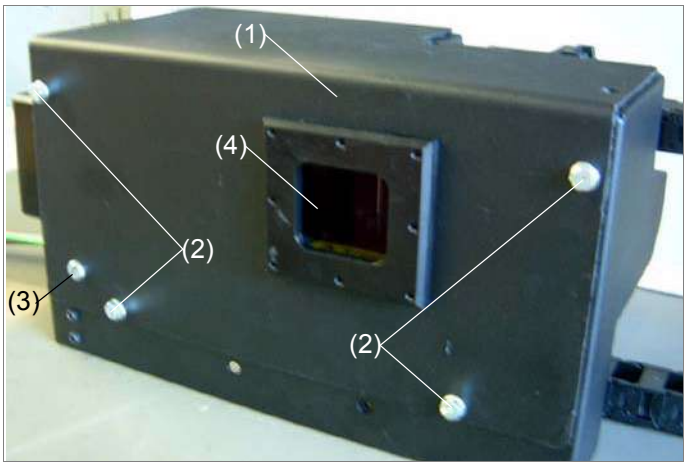

FRR_131_002_01

(1) Cover
(2) Screws for cover
(3) Screw for limit switch cover
(4) View window

CAUTION	**Machine damage!** Damage to **mirror, camera lens, and flash lamp** due to touching! => Touch and clean parts only with a soft fiber-free cloth. => Do not use cleaning agents.

3. Remove fitting screws (1) (Fig. 19).
4. Remove mirror (2).
5. Remove camera.

Fig. 19 Remove mirror

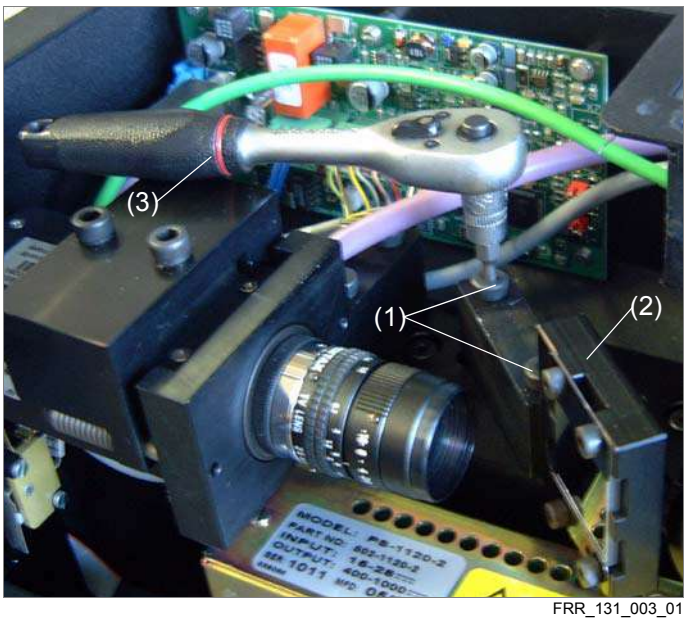

FRR_131_003_01

(1) Fitting screws for mirror
(2) Mirror
(3) Ratchet

6. Remove D-Sub plug (4) (Fig. 20).
7. Remove special screws (1).
8. Push supply unit (2) in the direction of the arrow and lift out.

Fig. 20 Remove supply unit

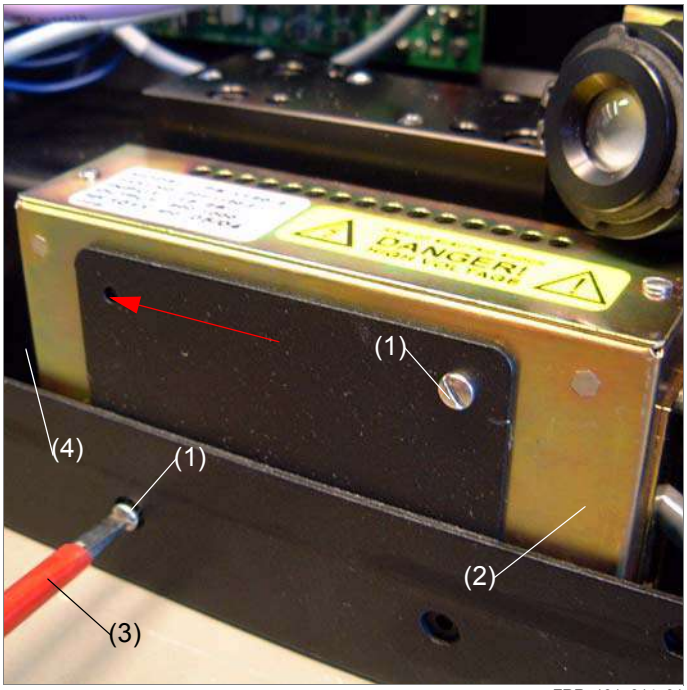

FRR_131_014_01

(1) Special screws
(2) Supply unit
(3) Screwdriver
(4) D-Sub plug

9. Unscrew special screws (1) and remove cover (Fig. 21).

Fig. 21 Remove cover

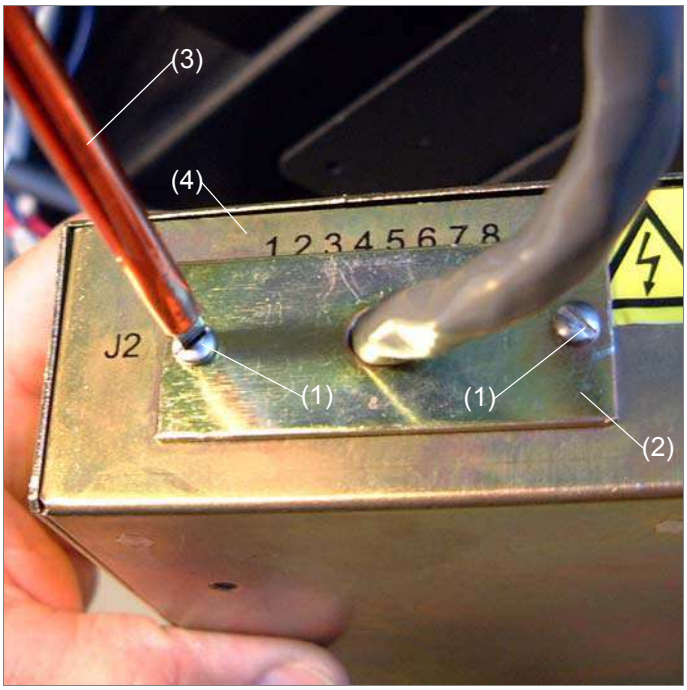

FRR_131_015_01

(1) Special screws
(2) Cover
(3) Screwdriver
(4) Supply unit

10. Make a note of the wire colors and insertion locations.
11. Pull out all wires (1) (Fig. 22).

Fig. 22 Pull off wires

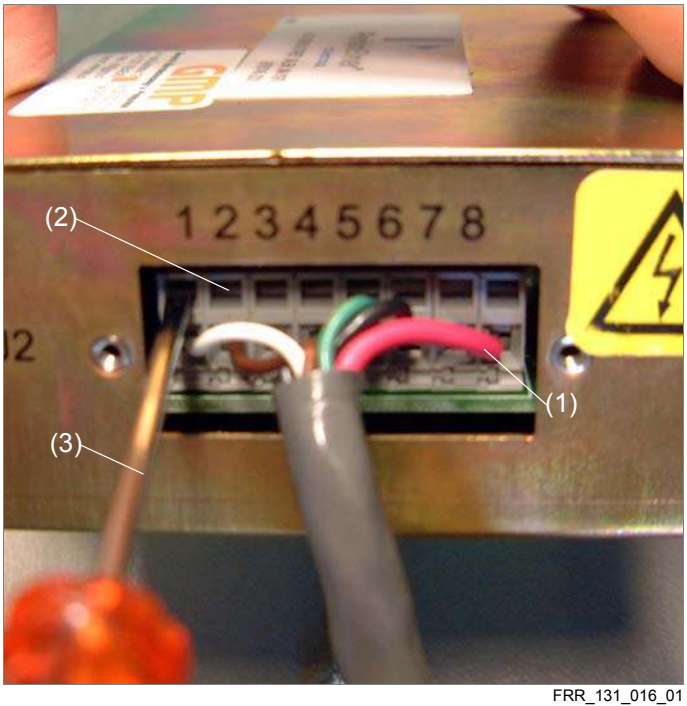

FRR_131_016_01

(1) conductor
(2) Terminal
(3) Screwdriver

Install supply unit

Fig. 23 Set dip switches

FRR_209_001_01

(1) TRIGGER switch
(2) V REF switch
(3) D-Sub plug

12. Connect all wires (1) in accordance with WIFAG *electrical circuit diagram* (Fig. 22).

CAUTION	**Machine damage!** Damage to **threads** due to wrong thread type! => Use only screws with English threading.

13. Screw in special screws (1) for cover (2) (Fig. 21).
14. Set the *TRIGGER* switch (1) and *V REF* switch (2) on the new supply unit to *EXT* according to (Fig. 23).
15. Mount supply unit (2) and secure with the special screws (1) (Fig. 20).
16. Connect D-Sub plug (4) to the supply unit (2).
17. Install camera.
18. Mount mirror (2) and secure with the fitting screws (1) (Fig. 19).
19. Mount cover (1) and tighten with the screws (2) (Fig. 18).
20. Remove *Work is in progress!* warning sign.
21. Switch on voltage in accordance with WIFAG *electrical circuit diagram*.

> The supply unit is replaced.

3.4 Replace linear unit

Specification

The linear units must be replaced as **complete** units. Repair work on the step motor of guide rail may be carried out only by qualified personnel!

Requirements

- The linear unit comes from WIFAG and therefore has a basic setting
- Work on the electrical system may be performed only by specially trained **technicians**.
- Production group / function group at standstill
- Read Chapt. 8.9 Carrying out repairs in Reg. 2 Important for your safety in the *System* file.

Materials needed

- Allen key set
- Warning signs *Work is in progress!*
- Screwdriver no. 1
- Screwdriver no. 4
- Ratchet set

DANGER	**Danger!** Risk of a lethal electric **surge**! => Work on electrical switching plants may be carried out only by personnel with the relevant training. => Observe instructions in Chapt. 8.5 Switch off power supply of the system parts in Reg. 2 Important for your safety. => Before touching electrical components, ensure that the power to the function group is switched off and check with a voltmeter.

WARNING	**Risk of injury!** **Risk of being trapped and crushed** by moving linear unit! => Perform cleaning and repair work only in cleaning position. => Observe the danger zone of the linear unit. => Do not reach with your hands behind the guard or at the side on the measuring module.

Replace linear unit

1. Disconnect the linear unit and measuring module from the voltage according to WIFAG *electrical circuit diagram*.
2. Open cover to connection box (2) of the step motor (3) (Fig. 24).
3. Pull off CAN bus cable plug (5).
4. Pull off supply cable plug (6).
5. Remove cable (5) (6) with rubber grommet (4).
6. Disconnect limit switch connector (7).

Fig. 24 Step motor connection box

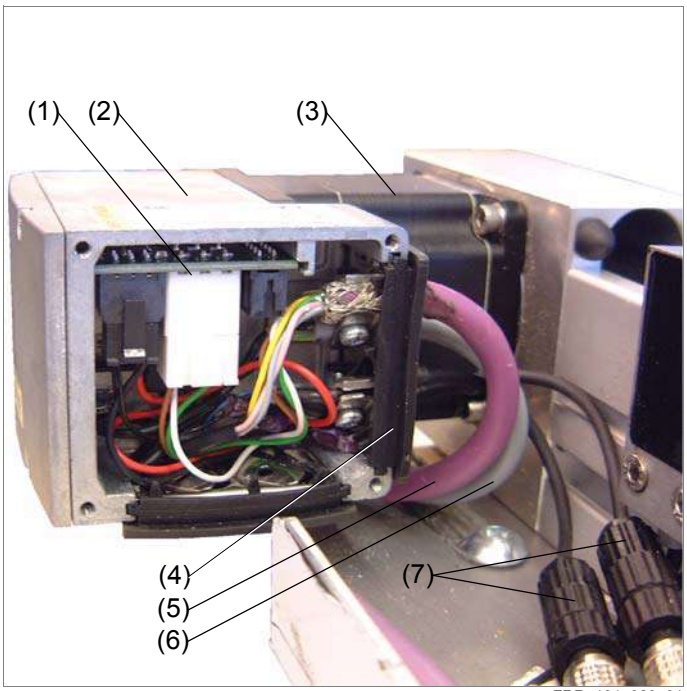

FRR_131_020_01

(1) Connection print
(2) Connection box
(3) Step motor
(4) Rubber grommet
(5) CAN bus cable
(6) Power supply cable
(7) Limit switch connector

7. Loosen screws (2) and remove cover (1) (Fig. 25).

Fig. 25 Measuring module closed (left / 2)

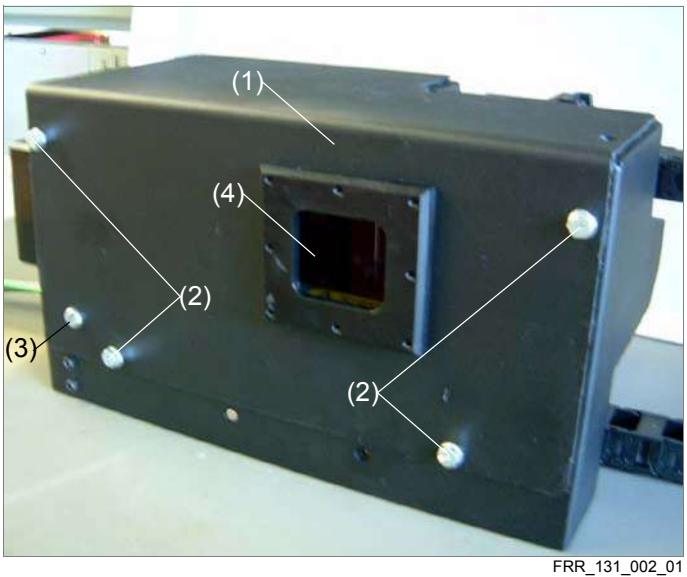

FRR_131_002_01

(1) Cover
(2) Screws for cover
(3) Screw for limit switch cover
(4) View window

8. Loosen fitting screws (1) and separate measuring module from the linear unit (Fig. 26).

Fig. 26 Fitting screws to measuring module

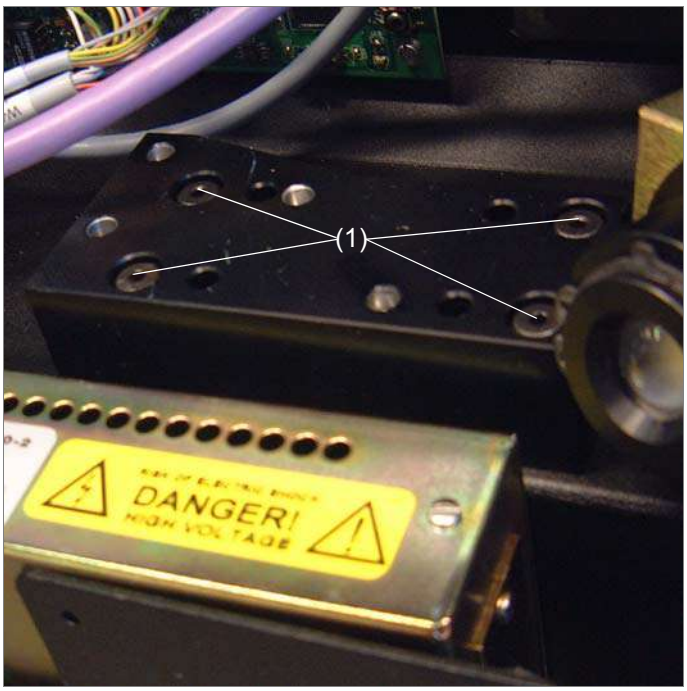

FRR_131_019_01

(1) Fitting screws

9. Prepare new linear unit:
   - Select left or right linear unit (Fig. 12).
   - Open cover to connection box (2) of the step motor (3) (Fig. 24).
   - Set DIL switch on the connection print (1) as on the defective linear unit.
10. Install new linear unit.
11. Mount measuring module and secure with the fitting screws (1) (Fig. 26).
12. Mount cover (1) and tighten with the screws (2) (Fig. 25).
13. Connect limit switch connector (7) (Fig. 24).
14. Attach cable with rubber grommet (4).
15. Attach supply cable plug (6).
16. Attach CAN bus cable plug (5).
17. Close cover to connection box (2).
18. Remove *Work is in progress!* warning sign.
19. Switch on voltage in accordance with WIFAG *electrical circuit diagram*.

> The linear unit is replaced.

3.5 Replace SYMAC processor

Note

For further information about the replacement work see Chapt. 3.1.6 Replacing the Windows AMKAMAC AS-CP22 in Reg. 11 Electrical setting and commissioning instructions in the *System* file.

4 Basic settings

Contents

This chapter contains the following information:

- Chapt. 4.1 Setting
- Chapt. 4.2 Calibration
- Chapt. 4.3 Testing

Specification

For safety reasons only the adjustment work described in these operating instructions may be performed! All adjustment work not described herein must be performed by qualified WIFAG personnel.

4.1 Setting

Note

No settings are necessary on this sub-function group.

4.2 Calibration

Note

No calibrations are necessary on this sub-function group.

4.3 Testing

Note

No tests are necessary on this sub-function group.

5 Troubleshooting

5.1 Malfunction indicators

Malfunctions are displayed on the control desk in the control console (see *supplier's documentation* of the control console manufacturer).

5.2 Malfunctions and troubleshooting

Tab. 4 Malfunctions and troubleshooting

Malfunction / malfunction display	Diagnosis / cause	Remedy
Color register control has selected an unfavorable zone or up in automatic mode.	The zones with "High" priority still contain register errors.	Select other zone or up according to Chapt. 2.2.4 Manual selection of the register mark field. > When the printing plates of the selected zone are in a register mark field, the color register controller moves the measuring head into position. As soon as the measuring head detects the register marks, control continues.
When 2 printing plates (print images) being used continuously, only one print image will be regulated.	Color register controller can only control one up.	
Register marks are sporadically not detected. (Color register control is dimensioned so that sporadic measured value interruptions do not influence the control).	Paper has lots of inclusions / flaws. > Measuring module does not detect register marks clearly and rejects the measurements.	Use better quality paper.
	Insufficient color density. > Register marks are not printed cleanly, which means camera cannot detect them clearly.	Supply more color to area with register marks.
	Measuring module view window is soiled. > Register marks are no longer clearly detected.	Clean view window according to Chapt. 4.25 Clean measuring head of color register controller in Reg. 6 Maintenance.
Register marks of *one* color are not detected.	Color register controller has incorrect production information. Register marks on corresponding printing plate are either not present or incorrect.	Select other zone or up according to Chapt. 2.2.4 Manual selection of the register mark field.

Tab. 4 (Cont. Tab.) Malfunctions and troubleshooting

Malfunction / malfunction display	Diagnosis / cause	Remedy
No register marks are detected.	No register marks on printing plates.	Change printing plates according to Chapt. 6.1 Manually insert and lift out printing plates in Reg. 4 operation or select another zone or up according to Chapt. 2.2.4 Manual selection of the register mark field.
	Measuring module has been moved manually. > Reference of positioning unit is no longer correct.	From control console drive to cleaning position. Then drive back to corresponding control position according to *supplier's documentation* provided by control console manufacturer.
	Incorrect production information. > Control is deactivated. > Measuring module incorrectly positioned.	Re-load production, correct register errors manually according to Chapt. 2.2.2 Manual adjustment of the register mark error, or select another zone or up according to Chapt. 2.2.4 Manual selection of the register mark field.

21 Fan-out compensator (optional)

1 Overview **21.3**

2 Construction and function **21.4**
2.1 Principle of operation of the fan-out compensator **21.5**
2.2 Fan-out roller **21.6**
2.3 Adjustment drive **21.7**

3 Replace components **21.8**
3.1 WIFAG article numbers **21.8**
3.2 Replacing the fan-out compensator **21.9**
3.3 Replace servo drive **21.11**

4 Basic settings **21.13**
4.1 Setting **21.14**
4.1.1 Setting the fan-out roller adjustment 21.14
4.2 Calibration **21.17**
4.3 Testing **21.17**
4.3.1 Testing the fan-out roller adjustment 21.17

1 Overview

Fig. 1 Overview of fan-out compensator, view from the side

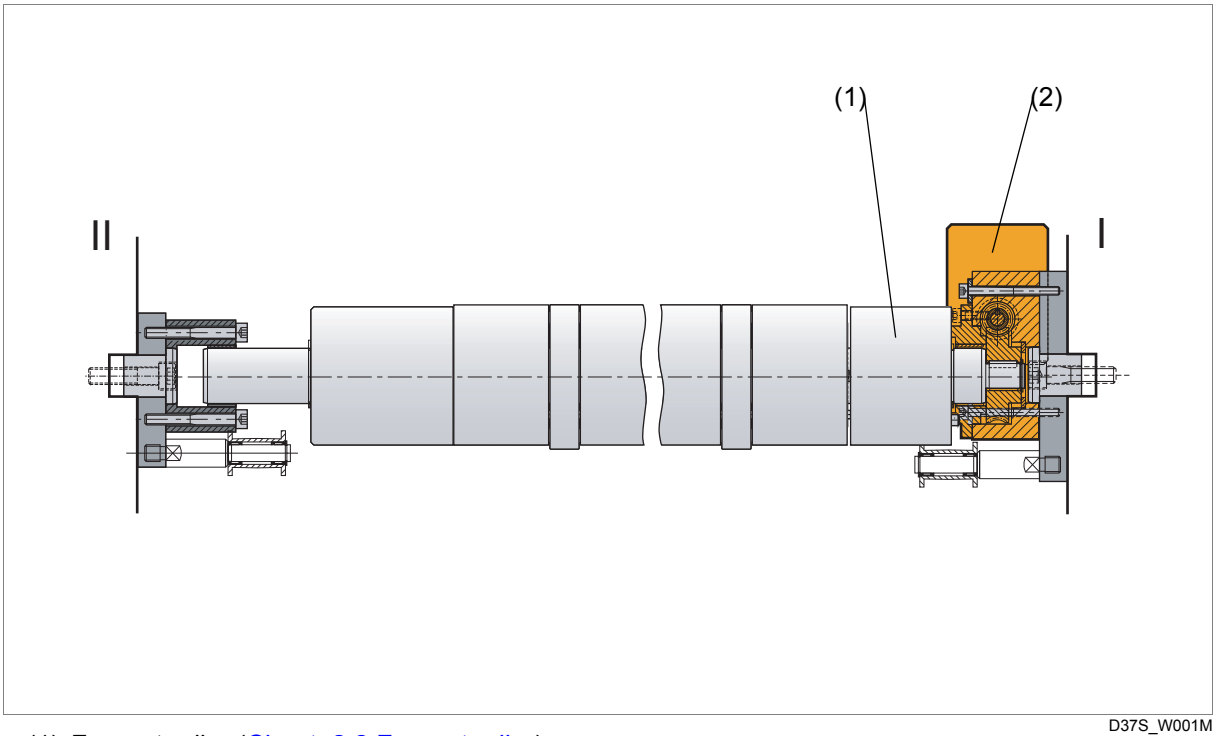

D37S_W001M

(1) Fan-out roller (Chapt. 2.2 Fan-out roller)
(2) Adjustment drive (Chapt. 2.3 Adjustment drive)

2 Construction and function

Contents

This chapter contains the following information:

- Chapt. 2.1 Principle of operation of the fan-out compensator
- Chapt. 2.2 Fan-out roller
- Chapt. 2.3 Adjustment drive

2.1 Principle of operation of the fan-out compensator

Depending on the paper quality and the current pressure ratios, the paper web (1) can expand in width due to excessive dampness absorption (fan-out effect) (Fig. 2).
By turning the fan-out roller (2), the eccentric rollers (3) enter the paper web (1) and reduce it to its original width.

Fig. 2 Principle of operation of the fan-out compensator

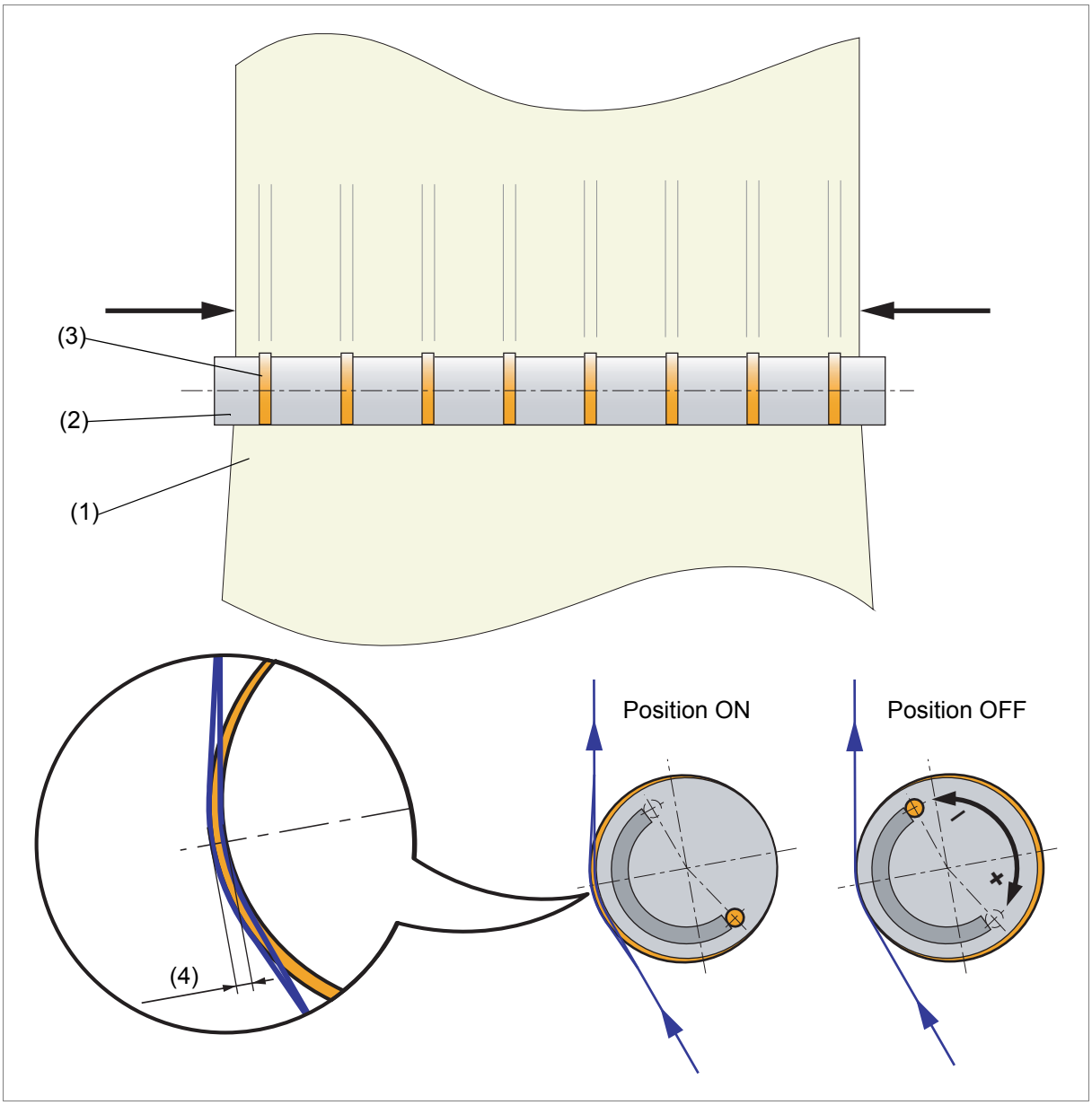

(1) Paper web
(2) Fan-out roller
(3) Eccentric rollers
(4) Maximum immersion depth 3 mm

2.2 Fan-out roller

The fan-out roller consists of eight eccentric rollers (4) and nine guide rollers (5) (Fig. 3).
The rollers (4) (5) are pushed together by the compression springs (7) and pressed against the termination ring (2). The rollers (4) (5) are mounted on eccentric rings (3) with ball bearings (6). The individual eccentric rings (3) are connected to each other and with the driving element (8) with cylindrical pins (10). The driving element (8) transfers the rotation movement of the axel (1) to the eccentric rings (3) by means of a feather key.

Fig. 3 Fan-out roller

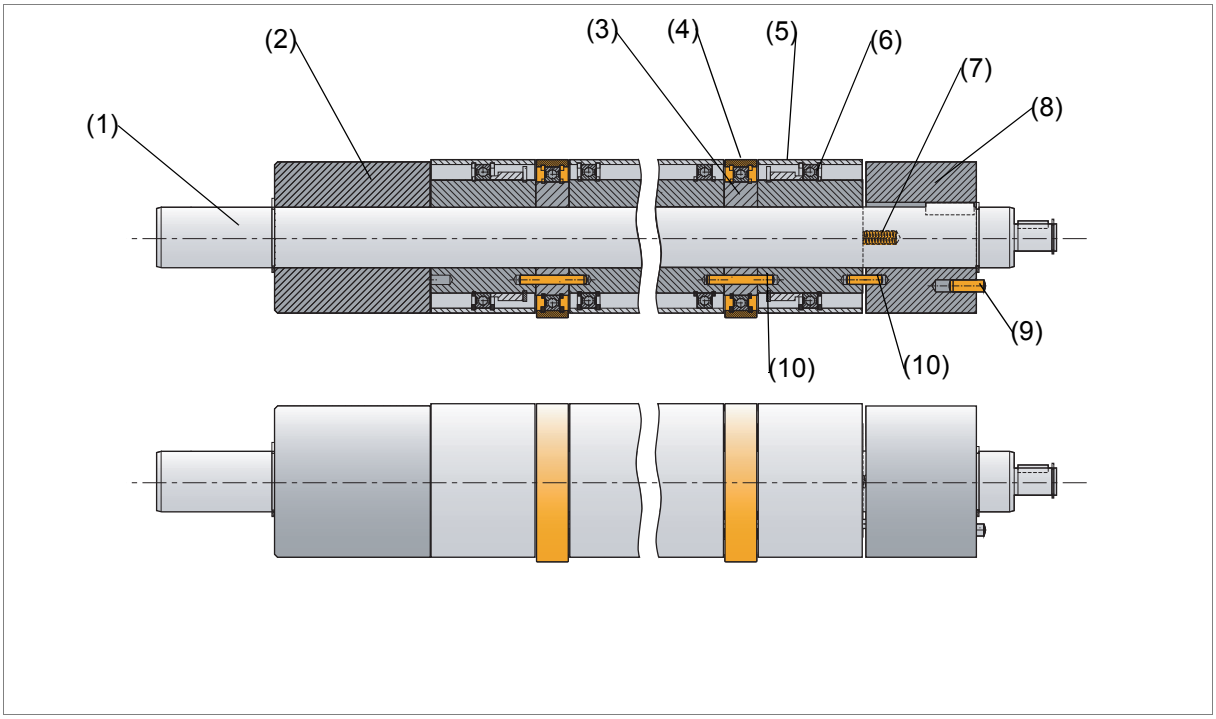

(1) Axle
(2) Termination ring
(3) Eccentric ring
(4) Eccentric rollers
(5) Guide rollers
(6) Ball bearing
(7) Compression spring
(8) Driving element
(9) Arrester pin
(10) Cylinder pin

2.3 Adjustment drive

The adjustment drive is driven by the servo drive (1). The servo drive (1) is connected to the worm shaft (3) via the coupling (2) (Fig. 4).
The worm shaft (3) transfers the rotary motion via the worm gear (4) to the axle (5). In an emergency the adjustment drive can also be manually displaced using the adjusting screw (6). The adjustment range of the fan-out compensator is 166 °. This corresponds to a maximum immersion depth (11) of 3 mm.

Fig. 4 Adjustment drive

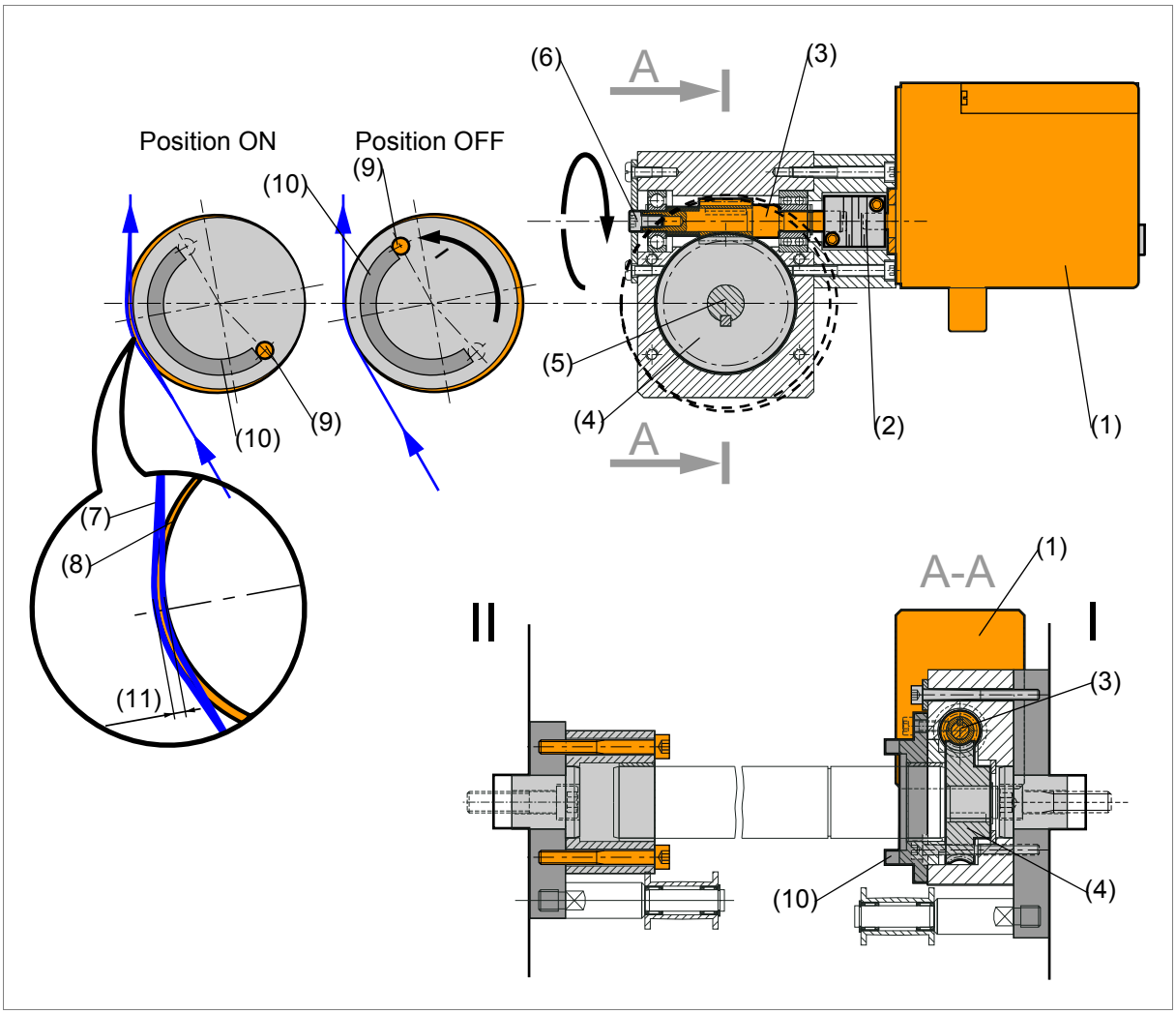

(1) Servo drive
(2) coupling
(3) Worm shaft
(4) Worm gear
(5) Axle
(6) Adjusting screw
(7) Paper web
(8) Eccentric rollers
(9) Arrester pin (movable)
(10) Arrester ring (unmovable)
(11) Maximum immersion depth 3 mm

3 Replace components

Contents

This chapter contains the following information:

- Chapt. 3.1 WIFAG article numbers
- Chapt. 3.2 Replacing the fan-out compensator
- Chapt. 3.3 Replace servo drive

Specification

For safety reasons only the replacement work described in these operating instructions may be performed! All replacement work not described herein must be performed by qualified WIFAG personnel.

3.1 WIFAG article numbers

Tab. 1 Overview of components and accessories

Article	Obtainable only from WIFAG	Can be ordered from WIFAG
Fan-out compensator, complete	1272783 1365606 1072393	----------
Servo drive	----------	1341239
coupling	----------	9008327
Compression spring	----------	A50041
Bearing for eccentric and guide rollers	----------	104786
Snap ring, outer	----------	104788
Snap ring, inner	----------	104789

3.2 Replacing the fan-out compensator

Requirements

- Production group / function group at standstill
- Chapt. 4.4 Working in the tunnel / mobile terminal in Reg. 2 Important for your safety has been read.
- Work on the electrical system may be performed only by specially trained **technicians**.

Materials needed

- Allen key set
- Torque wrench with 5 mm and 6 mm Allen socket
- Screwdriver no. 3
- 2 belts for securing
- Warning signs *Work is in progress!*
- Chapt. 4.1.1 Setting the fan-out roller adjustment
- Chapt. 4.3.1 Testing the fan-out roller adjustment
- Reg. 3 Control elements

⚠ WARNING	**Risk of injury!** **Risk of being trapped and crushed** by rotating rollers and cylinders! => De-allocate function group from the production group at the terminal and electrically disable (push the *SAFE-STOP* pushbutton). => Place *Work in progress!* warning signs on the corresponding terminals and control panels.

⚠ WARNING	**Risk of injury!** **Danger of crushing** if fan-out compensator falls down; weight 35 kg! => Ensure that the fan-out compensator does not fall when removing it.

Removing the complete fan-out compensator

1. Disconnect the electrical connections from servo drive (1) (Fig. 5).
2. Secure fan-out compensator against falling by securing it with belts on either side.
3. Loosen retaining screws (2) and slide bearing bushing (3) inwards.
4. Loosen retaining screws (4) and detach gearbox (5) from bearing pin (6) .

WARNING	**Risk of injury!** **Risk of back injuries** due to lifting out the fan-out compensator; weight 35 kg! => Always use two people to lift out the fan-out compensator.

5. Carefully lift out the fan-out compensator.

Installing the complete fan-out compensator

6. Carefully lift the fan-out compensator into place.
7. Slide gearbox (5) onto bearing pin (6) and screw retaining screws (4) into place.
8. Slide bearing bushing (3) into the borehole and screw retaining screws (2) into place.
9. Tighten retaining screws (2), (4).
10. Connect electrical connections.

Set the fan-out roller adjustment

11. Set fan-out compensator (Chapt. 4.1.1 Setting the fan-out roller adjustment).
12. Test fan-out compensator (Chapt. 4.3.1 Testing the fan-out roller adjustment).
13. Electrically enable function group with the *SAFE-STOP* pushbutton.

> The fan-out compensator is now replaced.

Fig. 5 Replace fan-out compensator, view from the side

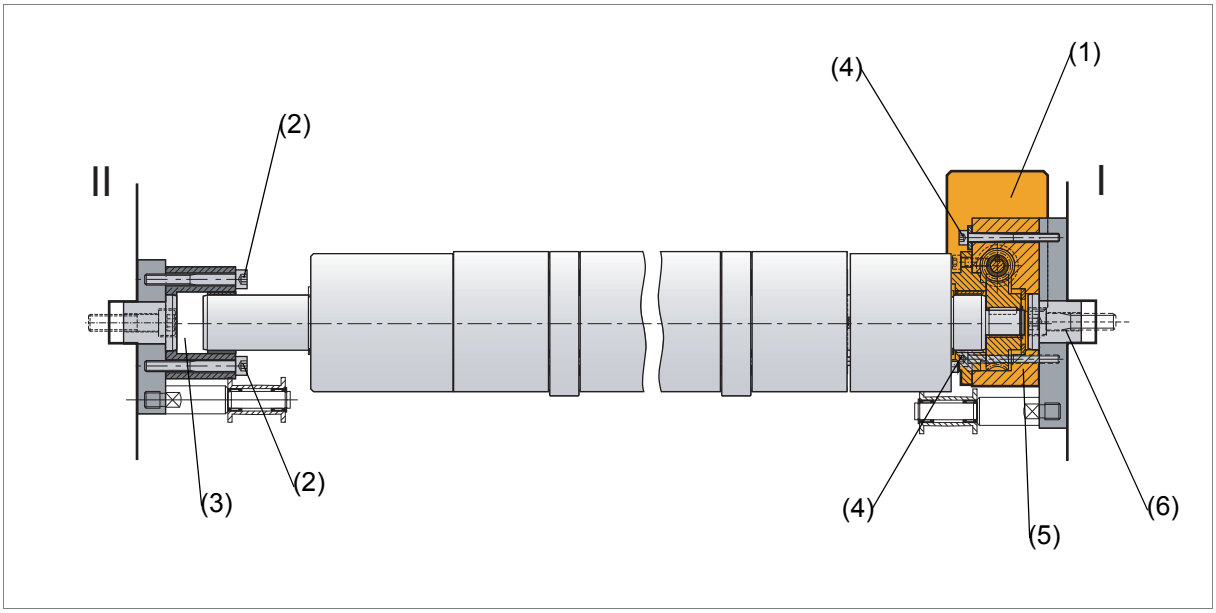

(1) Servo drive
(2) Retaining screw
(3) Bearing bushing
(4) Retaining screw
(5) Gearbox
(6) Bearing pin

3.3 Replace servo drive

Requirements

- Production group / function group at standstill
- Chapt. 4.4 Working in the tunnel / mobile terminal in Reg. 2 Important for your safety has been read.
- Work on the electrical system may be performed only by specially trained **technicians**.

Materials needed

- Allen key set
- Screwdriver no. 3
- Warning signs *Work is in progress!*
- (Chapt. 2.2 Replacing drives in Reg. 11 Electrical setting and commissioning instructions in the *System* file.
- Chapt. 4.1.1 Setting the fan-out roller adjustment
- Chapt. 4.3.1 Testing the fan-out roller adjustment
- Reg. 3 Control elements

⚠ WARNING	**Risk of injury!** **Risk of being trapped and crushed** by rotating rollers and cylinders! => De-allocate function group from the production group at the terminal and electrically disable (press *SAFE-STOP* pushbutton). => Place *Work in progress!* warning signs on the corresponding terminals and control panels.

Removing the servo drive

1. Electrically isolate servo drive (Chapt. 2.2 Replacing drives in Reg. 11 Electrical setting and commissioning instructions in the *System* file).
2. Removing the fan-out compensator (Chapt. 3.2 Replacing the fan-out compensator).
3. Turn adjustment screw (2) until retaining screw on coupling (3) can be accessed (Fig. 6).
4. Carefully loosen retaining screw (3) on the coupling.
5. Loosen retaining screws (4) and remove cover (5).
6. Loosen retaining screws (6) and pull off servo drive.

Install servo drive

7. Slide servo drive carefully into place and tighten retaining screws (6).
8. Slide cover (5) into place and tighten retaining screws (4).
9. Carefully tighten retaining screw (3) on the coupling.
10. Install fan-out compensator (Chapt. 3.2 Replacing the fan-out compensator).

Set the fan-out roller adjustment

11. Set fan-out compensator (Chapt. 4.1.1 Setting the fan-out roller adjustment).
12. Test fan-out compensator (Chapt. 4.3.1 Testing the fan-out roller adjustment).
13. Electrically enable function group with the *SAFE-STOP* pushbutton.

> The servo drive is replaced.

Fig. 6 Replace servo drive

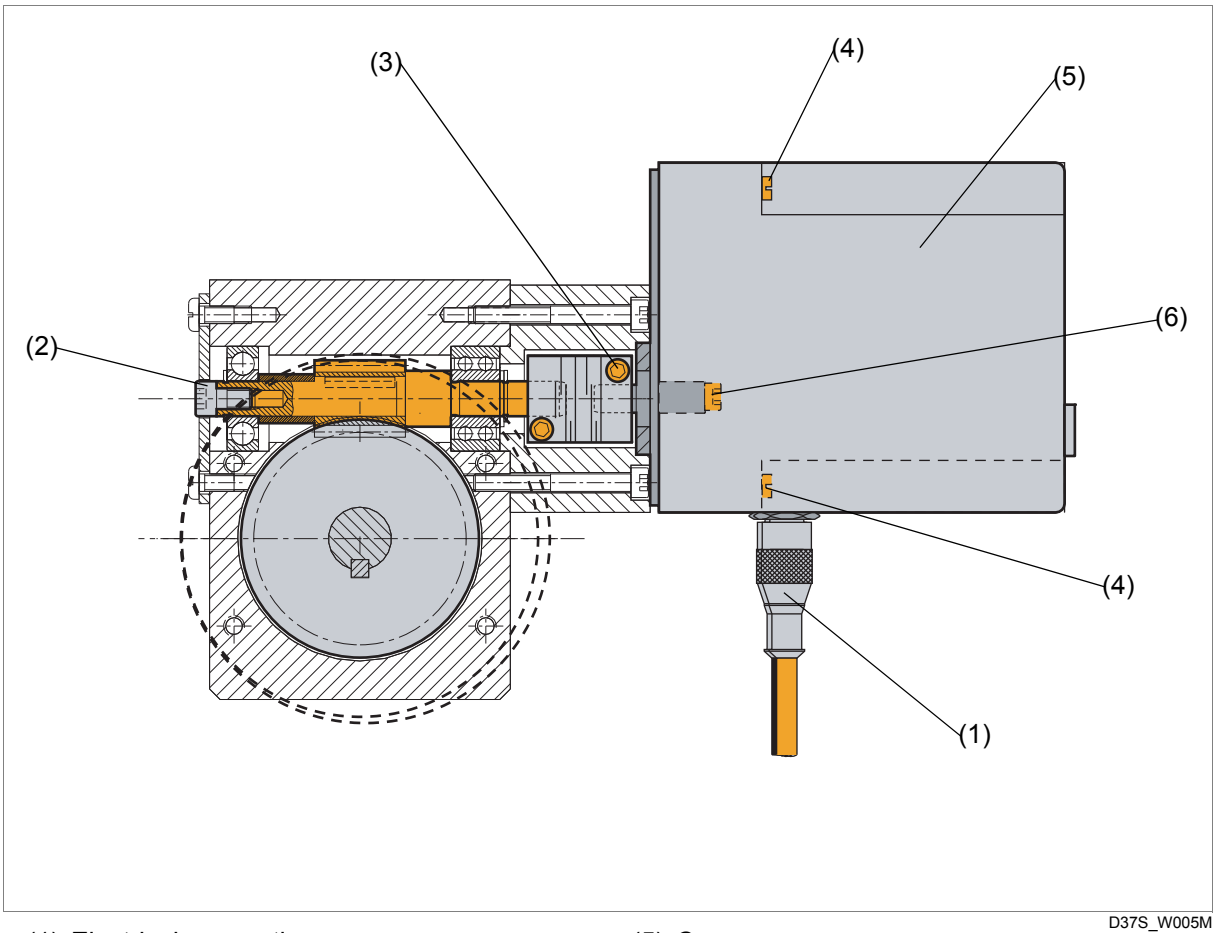

D37S_W005M

(1) Electrical connections
(2) Adjusting screw
(3) Retaining screw for clutch
(4) Retaining screw for cover
(5) Cover
(6) Retaining screws for servo drive

4 Basic settings

Contents

This chapter contains the following information:

- Chapt. 4.1 Setting
- Chapt. 4.2 Calibration
- Chapt. 4.3 Testing

Specification

For safety reasons only the adjustment work described in these operating instructions may be performed! All adjustment work not described herein must be performed by qualified WIFAG personnel.

4.1 Setting

4.1.1 Setting the fan-out roller adjustment

Requirements

- Production group / function group at standstill
- Work on the electrical system may be performed only by specially trained **technicians**.
- Cause of malfunction is known (sidelay register drive, electrical system, control system, mechanics)

Materials needed

- Allen key set
- Screwdriver no. 3
- Warning signs *Work is in progress!*
- Reg. 3 Control elements
- Chapt. 4.3.1 Testing the fan-out roller adjustment

⚠ WARNING	**Risk of injury!** **Risk of being trapped and crushed** by moving fan-out roller! => Before entering each command at a terminal or control panel, make certain that nobody is in the danger zone.

Mechanically positioning the fan-out roller adjustment

1. On the terminal, change to the Menu Test \ Fan-out roller mask.
2. Switch on *TEST MODE*.

⚠ WARNING	**Risk of injury!** **Risk of being trapped and crushed** by rotating rollers and cylinders! => De-allocate function group from the production group at the terminal and electrically disable (push the *SAFE-STOP* pushbutton). => Place *Work in progress!* warning signs on the corresponding terminals and control panels.

3. Turn adjustment screw (1) until retaining screw (2) on coupling (3) can be accessed (Fig. 7).
4. Carefully loosen retaining screw (2).

5. Turn adjustment screw (1) counterclockwise to the stop.

> The fan-out roller is in position AB.

> Arrester pin (4) contacts the arrester ring (5).

6. Carefully tighten retaining screw (2).

Electrically setting the fan-out roller adjustment

7. Remove protective cap (6).
8. Turn the potentiometer axis until a setpoint of minus 1% is displayed on the terminal.
9. Test the fan-out roller adjustment (Chapt. 4.3.1 Testing the fan-out roller adjustment).

> The fan-out roller adjustment is now set.

Fig. 7 Setting the fan-out roller adjustment

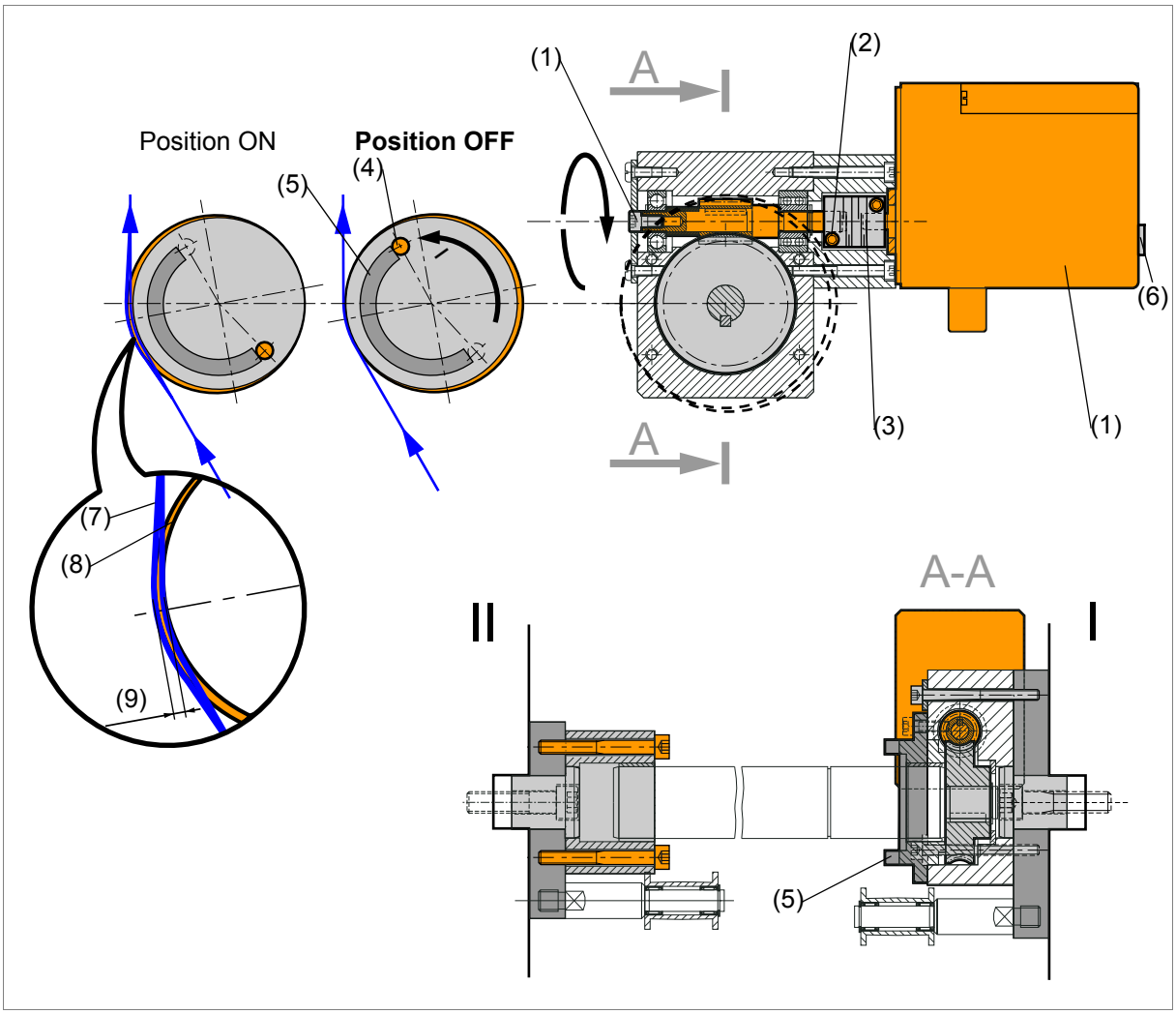

(1) Adjusting screw
(2) Retaining screw
(3) coupling
(4) Arrester pin (movable)
(5) Arrester ring (unmovable)
(6) Protective cap
(7) Paper web
(8) Eccentric rollers
(9) Maximum immersion depth 3 mm

4.2 Calibration

Note

No calibrations are necessary on this sub-function group.

4.3 Testing

4.3.1 Testing the fan-out roller adjustment

Requirements

- Production group / function group at standstill

Materials needed

- Warning signs *Work is in progress!*
- Reg. 3 Control elements

⚠ WARNING	**Risk of injury!** **Risk of being trapped and crushed** by moving fan-out roller! => Before entering each command at a terminal or control panel, make certain that nobody is in the danger zone.

1. On the terminal, change to the Menu Test \ Fan-out roller mask.
2. Switch on *TEST MODE*.
3. Set *SETPOINT TEST MODE* to 100%.

> The fan-out roller moves to the ON position (Fig. 8).

4. On the terminal, change to the Fault messages \ mask.

> No fault message for the corresponding function is displayed.

⚠ WARNING	**Risk of injury!** **Risk of being trapped and crushed** by rotating rollers and cylinders! => De-allocate function group from the production group at the terminal and electrically disable (push the *SAFE-STOP* pushbutton). => Place *Work in progress!* warning signs on the corre-sponding terminals and control panels.

5. Check the position of arrester pin (3) (Fig. 8).

6. Electrically enable function group with the *SAFE-STOP* pushbutton.
7. On the terminal, change to the Menu Test \ Fan-out roller mask.
8. Set *SETPOINT TEST MODE* to 0%.
> The fan-out roller moves to the OFF position.
9. On the terminal, change to the Fault messages \ mask.
> No fault message for the corresponding function is displayed.
10. Electrically disable function group with the *SAFE-STOP* pushbutton.
11. Check the position of arrester pin (3) (Fig. 8).
12. Electrically enable function group with the *SAFE-STOP* pushbutton.
13. Switch off *TEST MODE*.
14. On the terminal, change to the Information mask.
> The fan-out roller adjustment is now tested.

Fig. 8 Testing the fan-out roller adjustment

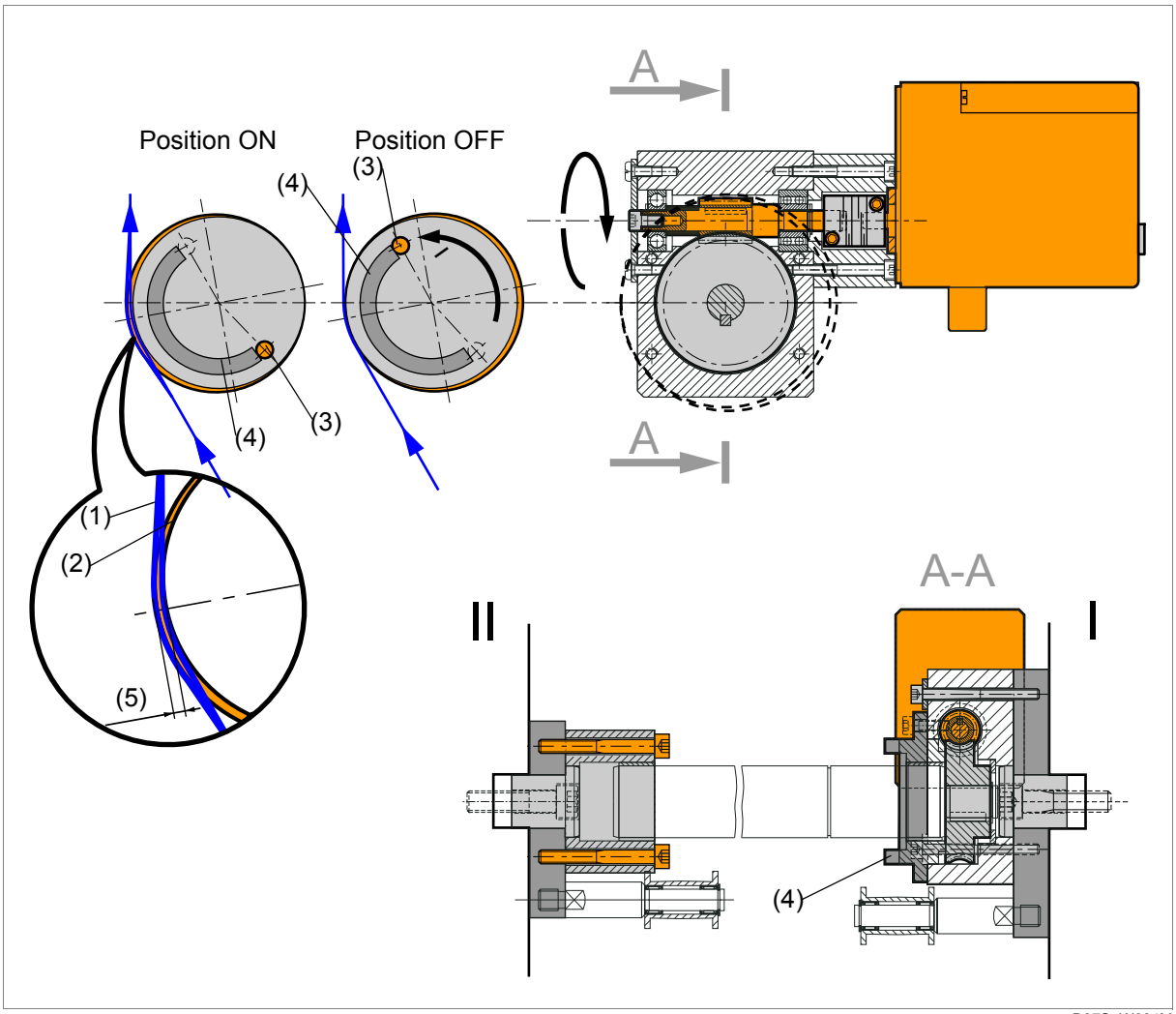

(1) Paper web
(2) Eccentric rollers
(3) Arrester pin (movable)
(4) Arrester ring (unmovable)
(5) Maximum immersion depth 3 mm