Rotary offset press WIFAG OF 370 S

WIFAG

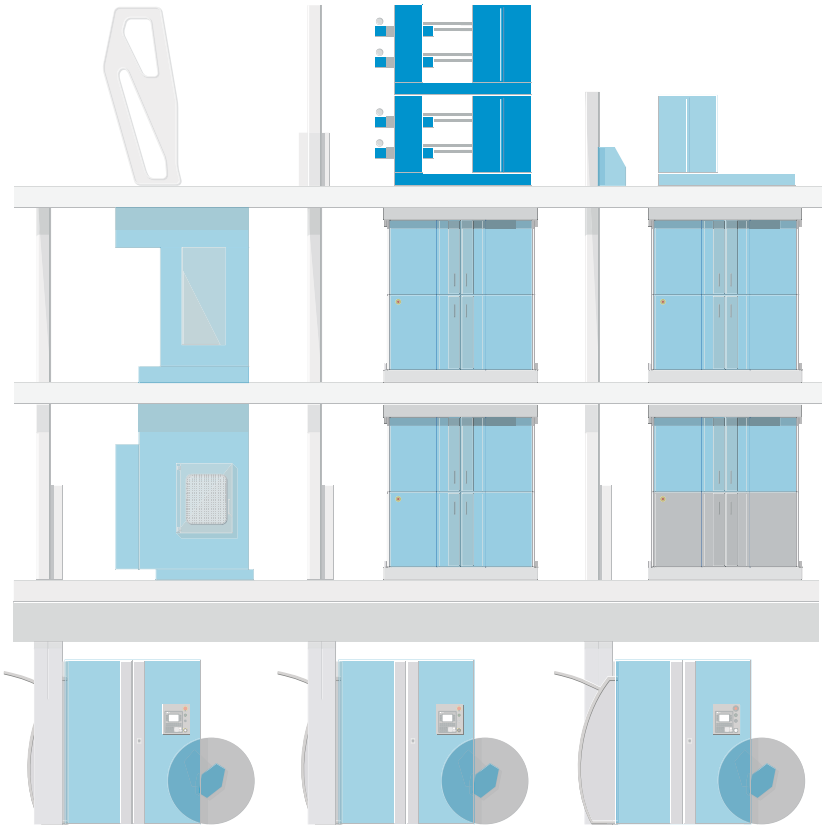

System

Folder

Angle bar module

Pull roller module

Printing unit

Autopaster

Suppliers documentation

Note protection mark ISO 16016

Rotary offset press

Operating instructions

Angle bar module

Machine type:	**WIFAG OF 370 S**	
Series:	**WIFAG autoturn**	
Project:	**Ananda**	
Project No.:	**WO-218**	
Document No.:	**WE/WIFAG autoturn/218**	
Machine No.:	**2344-2346**	
Year of construction:	**2007**	
Edition 1*:	**03.07.09**	**(Subject to changes)**

*)This edition replaces all previously delivered versions of this operating instructions manual!

CE

WIFAG Maschinenfabrik AG
Wylerringstrasse 39
Postfach 8865
3001 Bern, Schweiz
Telefon:++ 41 (0) 31 / 339 33 33
Telefax:++ 41 (0) 31 / 339 36 65
http://www.wifag.com Mailto:info@wifag.ch

Subject to changes in the interest of technical progress.

Note protection mark ISO 16016:
"The reproduction, distribution and utilization of this document as well as the communication of its contents to others without explicid authorization is prohibited. Offenders will be held liable for the payment of damages. All rights reserved in the event of the grant of a patent, utility model or design."

Register in the Angle bar module file

Introduction and product overview.....1
Important for your safety 2
Control elements 3
operation 4
Lubrication 5
Maintenance 6
Electrical and control systems.....7
Pneumatic system 8
Draw roller and cutting unit.....9
Web monitoring 10
Angle-bar system.....11
Secondary register (optional).....12
Dust extraction.....13
Ribbon register 14

Contents system file

1 Introduction and product overview

1 Important Information ... 1.3
1.1 Qualification of the operating personnel and maintenance personnel ... 1.3
1.2 Production preparation and setup of the printing press ... 1.4
1.3 Printing press operation ... 1.6
1.4 Machine settings and read-back values ... 1.8
1.5 Requirements for consumables ... 1.10
1.6 Supply systems and ambient conditions ... 1.10
1.7 Maintenance of the printing press ... 1.12
1.8 Spare parts ... 1.13
1.9 Guarantee ... 1.14

2 Operating instructions information ... 1.15

3 Overview of the system ... 1.16

4 Overview ... 1.17
4.1 Angle-bar module ... 1.17

2 Important for your safety

1 Basic information ... 2.3

2 Safety sectors ... 2.4

3 Working stations of danger zones ... 2.5
3.1 Overview ... 2.6
3.2 Register adjustment danger zone ... 2.8
3.3 Angle bar system danger zone ... 2.10
3.4 Cutting unit danger zone ... 2.11
3.5 Pressure rollers danger zone ... 2.12
3.6 Draw roller / bottom cutter shaft danger zone ... 2.13
3.7 Feed-in device danger zone ... 2.14

4 Protective devices ... 2.16
4.1 Overview ... 2.16
4.2 Guards and covers ... 2.19

5 Safety switch of the power supply ... 2.20
5.1 Switch current supply on and off ... 2.21

6 key-operated switch ... 2.24

7 Indicator elements and warning signals ... 2.25

8 Stop functions ... 2.28

3 Control elements

1 Overview ... 3.3
1.1 Angle-bar module ... 3.3

2 Control elements ... 3.4
2.1 Angel-bar module control panel ... 3.5
2.2 Overview of pushbuttons and commands ... 3.6
2.3 Design and operation of the terminals ... 3.8
2.4 Terminal masks ... 3.16
2.5 Install terminal software ... 3.48

3 Indicators and warning devices ... 3.49

4 Malfunction indicators ... 3.51

4 Operation

1 General safety information ... 4.3

2 Operating modes ... 4.4
2.1 Restrictions due to open guards ... 4.4
2.2 Run commands in production ... 4.4
2.3 Run commands in isolated mode ... 4.5

3 Allocation and de-allocate function groups ... 4.6

4 Angel-bar module control panel ... 4.7

5 Operating the pressure rollers ... 4.8

6 Place cutter in the ON or OFF position ... 4.9

7 Operate angle bars ... 4.10
7.1 Reposition leading angle bar ... 4.10
7.2 Reposition trailing angle bar ... 4.12
7.3 Emergency adjustment of the angle bars ... 4.14
7.4 Referencing / positioning ... 4.16

8 Right-angle web lead roller (optional) ... 4.20

9 Secondary register operation ... 4.22
9.1 Emergency adjustment of the secondary register roller ... 4.22
9.2 Referencing / positioning ... 4.24

10 Operate ribbon register ... 4.27
10.1 Emergency adjustment of the ribbon register roller ... 4.27
10.2 Referencing / positioning ... 4.29

11 Operate draw rollers 4.33
11.1 Draw roller tests 4.33

12 Operate secondary register 4.35
12.1 Paper dust extractor 4.35
12.2 Duct fan 4.36

5 Lubrication

1 Overview 5.3
1.1 Lubrication systems 5.3
1.2 General safety information 5.4
1.3 Lubricant properties 5.6
1.4 Lubricant overview 5.7
1.5 Special lubricants and preservatives 5.8

2 Construction and function 5.9
2.1 Individual oil lubrication points 5.9
2.2 Individual grease lubrication points 5.9
2.3 Lubricated for life lubrication points 5.9
2.4 Cutter 5.10
2.5 Ribbon register linear guides 5.10

3 Replace components 5.11

4 Basic settings 5.12
4.1 Setting 5.12
4.2 Calibration 5.12
4.3 Testing 5.12

5 Lubrication instructions 5.13
5.1 Lubricate individual oil lubrication points 5.13
5.2 Lubricate individual grease lubrication points 5.15

6 Maintenance

1 Information and regulations 6.3

2 Maintenance intervals 6.4

3 Maintenance schedules 6.5

3.1 Maintenance schedules of the entire installation 6.5
3.2 Daily maintenance schedule 6.6
3.3 Weekly maintenance schedule 6.7
3.4 Monthly maintenance schedule 6.8
3.5 Biannual maintenance schedule 6.9
3.6 Annual maintenance schedule 6.10
3.7 Maintenance schedule at special intervals 6.11
3.8 Maintenance schedule for suppliers' components 6.12

4 Maintenance activities 6.13

4.1 Dry clean reflected light sensors 6.14
4.2 Cleaning the draw rollers 6.15
4.3 Remove ink and paper dust 6.16
4.4 Clean reflected light sensor with optical cleaner 6.17
4.5 Cleaning the angle bars 6.18
4.6 Check pressure rollers 6.20
4.7 Clean linear guides and ball screw spindles 6.22
4.8 Maintenance activities on the ribbon register 6.24
4.9 Cleaning adjustment spindle for angle bars 6.25
4.10 Clean crossbeam guides for angle bars 6.27
4.11 Check pneumatic system 6.29
4.12 Measuring and setting timing belt tensions 6.30
4.13 Maintenance activities on the shear cut cutting holder 6.36
4.14 Maintenance activities on the lower cutter 6.36
4.15 Maintenance activities on the duct compressor 6.37
4.16 Maintenance activities on the vacuum cleaner 6.39

7 Electrical and control systems

1 Overview 7.3
1.1 Overview of electrical components 7.4

2 Construction and function 7.6
2.1 Power supply 7.6
2.2 Bus systems 7.14
2.3 Special electrical components 7.16

3 Replace components 7.17

4 Basic settings 7.18

5 Commissioning 7.19

8 Pneumatic system

1 Overview 8.3
1.1 System 8.3
1.2 Angle-bar module 8.4
1.3 Pneumatic system schematics 8.5
1.4 Configuration and actuation of the pneumatic valves 8.6

2 Construction and function 8.7
2.1 Main air pressure-regulator 8.7
2.2 Pressure switch 8.7
2.3 Filter-regulator-lubricator unit 8.7
2.4 Pneumatic components on subfunction groups 8.7
2.5 Valve block 8.8

3 Replace components 8.10
3.1 WIFAG article numbers 8.10
3.2 Replace standard components 8.11
3.3 Replace special components 8.11

4 Basic settings 8.12
4.1 Setting 8.12
4.2 Calibration 8.13
4.3 Testing 8.14

9 Draw roller and cutting unit

1 Overview ... 9.3

2 Construction and function ... 9.4
2.1 Drive for draw roller and lower cutter shaft ... 9.5
2.2 Cooling ... 9.6
2.3 Bottom cutter shaft ... 9.7
2.4 Cutting unit ... 9.8
2.5 Draw roller ... 9.8
2.6 Pressure roller ... 9.9

3 Replace components ... 9.10
3.1 WIFAG article numbers ... 9.11
3.2 Replace pressure roller ... 9.12
3.3 Replace shear cut knife holder ... 9.14
3.4 Replace cutter ... 9.14
3.5 Replace lower cutter ... 9.14
3.6 Replace timing belt for draw roller / lower cutter roller ... 9.15
3.7 Replace drive for draw roller / lower cutter roller ... 9.17

4 Basic settings ... 9.21
4.1 Setting ... 9.22
4.2 Calibration ... 9.25
4.3 Testing ... 9.26

10 Web monitoring

1 Overview ... 10.3

2 Construction and function ... 10.5
2.1 Web break detector ... 10.5

3 Replace components ... 10.7
3.1 WIFAG article numbers ... 10.7
3.2 Replacing the reflected light sensor for the web-break detector ... 10.8

4 Basic settings ... 10.9
4.1 Setting ... 10.10
4.2 Calibration ... 10.12
4.3 Testing ... 10.12

11 Angle-bar system

1 Overview 11.3

2 Construction and function 11.4
2.1 Angle bars 11.5
2.2 Angle-bar drive 11.9
2.3 Blast air 11.10
2.4 Right-angle web lead rollers (optional) 11.11

3 Replace components 11.13
3.1 WIFAG article numbers 11.13
3.2 Replace angle bar drive timing belt 11.14
3.3 Replace angle bar drive 11.17
3.4 Replace duct fan 11.21

4 Basic settings 11.23
4.1 Setting 11.23
4.2 Referencing 11.23
4.3 Testing 11.23

12 Secondary register (optional)

1 Overview 12.3

2 Construction and function 12.4
2.1 Linear guides for secondary register roller 12.4
2.2 Secondary register roller drive 12.5

3 Replace components 12.6
3.1 WIFAG article numbers 12.6
3.2 Replace the secondary register roller drive timing belt 12.7
3.3 Replace drive for secondary register roller 12.9

4 Basic settings 12.13
4.1 Setting 12.13
4.2 Referencing 12.13
4.3 Testing 12.13

13 Dust extraction

1 Overview ... 13.3

2 Construction and function ... 13.4
2.1 Dual dust extraction ... 13.4
2.2 Valves ... 13.5
2.3 Dust extractor ... 13.6

3 Replace components ... 13.8
3.1 WIFAG article numbers ... 13.8
3.2 Replace components on dust extractor ... 13.9

4 Basic settings ... 13.11
4.1 Setting ... 13.11
4.2 Calibration ... 13.11
4.3 Testing ... 13.11

14 Ribbon register

1 Overview ... 14.3

2 Construction and function ... 14.4
2.1 Linear guides for ribbon register roller ... 14.4
2.2 Ribbon register roller adjustment ... 14.5

3 Replace components ... 14.6
3.1 WIFAG article numbers ... 14.7
3.2 Replace ribbon register roller adjustment ... 14.8
3.3 Replace drive for ribbon register roller adjustment ... 14.10

4 Basic settings ... 14.14
4.1 Setting ... 14.14
4.2 Referencing ... 14.14
4.3 Testing ... 14.14

1 Introduction and product overview

1 Important Information 1.3
1.1 Qualification of the operating personnel and maintenance personnel 1.3
1.2 Production preparation and setup of the printing press 1.4
1.3 Printing press operation 1.6
1.4 Machine settings and read-back values 1.8
1.5 Requirements for consumables 1.10
1.6 Supply systems and ambient conditions 1.10
1.7 Maintenance of the printing press 1.12
1.8 Spare parts 1.13
1.9 Guarantee 1.14
2 Operating instructions information 1.15
3 Overview of the system 1.16
4 Overview 1.17
4.1 Angle-bar module 1.17

1 Important Information

The operating instructions contain important instructions about the maintenance and operation of a WIFAG printing press. Compliance with these instructions is essential if the WIFAG newspaper printing press is to achieve the specified production output and print quality.

Failure to observe the instructions on maintenance and operation of the printing press means that there can be no guarantee that the printing press will achieve the specified performance values with regard to availability, production output, print quality and the amount of wastage that occurs during production. Failure to observe these instructions also means that WIFAG cannot guarantee that the values specified for the printing press with regards to availability, production outputs, print quality and wastage are achieved.

1.1 Qualification of the operating personnel and maintenance personnel

A modern newspaper printing press is an industrial production plant that comprises a multitude of complex technical systems and functions such as mechanical devices, electronic and software-based automation functions and printing procedures.

Large industrial production machines such as a newspaper printing press require qualified technical personnel to maintain and operate the machine in production operation.

WIFAG newspaper printing presses are equipped with electronic machine control systems and with automatic regulation; they are largely automated. This means they require relatively few operating personnel. By the same token the requirements on the maintenance and operating personnel in terms of technical qualifications are relatively high.

Maintaining and running the printing press in production requires the assignment of trained personnel who are sufficiently qualified for their respective tasks. The technical qualification requirements expected of the personnel for the maintenance work and for running the printing press in production are specified in the operating instructions.

To understand the particularities of WIFAG newspaper printing presses and be able to perform the specific maintenance work and operation of the press in production, the personnel concerned must attend and successfully complete all the relevant courses provided by WIFAG and the automation system suppliers (central control console, production management computer, etc.).

Every course participant who has successfully participated in WIFAG training courses and training courses given by automation system suppliers (central control console, production management computer, etc.) receives a certificate confirming course completion.

To ensure that the knowledge and skills acquired at these courses are not forgotten, it is imperative that all personnel assigned to maintenance work and to operating the press in production regularly attend refresher courses.

1.2 Production preparation and setup of the printing press

The production preparation and setup of the printing press in production requires the assignment of trained personnel who are sufficiently qualified for this task.

To understand the particularities of WIFAG newspaper printing presses and be able to perform the specific production preparation and makeready work on the printing press, the concerned personnel must attend and successfully complete the relevant WIFAG training courses and those of the automation system suppliers (central control console, production management computer, etc.).

The technical production planning and production preparation for the printing press are done primarily with the production management computer system and the control console system. The functions of the production management computer system and the control console system are described in the corresponding manuals. These manuals are part of the operating instructions

The effectiveness of the printing press in operation can be greatly influenced by production planning – with positive and negative repercussions.

A particular newspaper edition with a particular stitching structure and color imposition can be printed with the printing press in many different ways, i.e. with different web paths through the press, different imposition schemes, different color impositions of the printing couples, different plate allocations on the impression cylinders of the printing couples, etc.

For instance it usually makes sense to produce a particular newspaper edition with as few webs as possible and as wide as possible, e.g. with ABCD full width. It is usually less economical to use more webs of a lesser width, e.g. with BC half width. Using fewer webs means having to feed fewer webs into the machine. This cuts down on the work needed to set up the press for a new production run. The number of paper rolls used and the number of roll changes can also be reduced as a result.

The effectiveness of the printing press in operation depends greatly on the selected web paths through the press, the color allocations to the printing couples, the turning operations on the angle bars, the web paths over formers and through the folder.

Using the simplest possible web path routes through the press – with short web paths, simple turning operations and simple web paths through the folder tower – greatly contributes towards reducing the amount of work needed to set up the press, towards reliable production runs and a high production output of the press.

Resetting operations between successive production runs, e.g. feeding in new webs, washing blanket cylinders, re-hanging printing plates, can be reduced if the paper guides, imposition schemes and occupations used in successive production runs are coordinated.

- If the web paths used in successive production runs are identical, the corresponding webs do not have to be fed in from scratch between production runs.
- If the plate allocations on the impression cylinders of the printing couples remain the same in successive production runs, for instance when printing newspaper editions with largely the same content, only a few printing plates need to be repositioned.

WIFAG wishes to point out that the production output of the printing press, the work needed to set up the press for a new production run and the work needed to reset the printing press between successive production runs are all significantly influenced by the technical production planning and production preparations. Setting up optimal production performance of the printing press and the optimal printing results require appropriate technical production planning and production preparation.

Before a production run can begin, the printing press has to be set up accordingly. The appropriate production data has to be loaded on the control console system. Among other things, the correct width webs have to be fed through the machine using the correct web paths. The printing plates have to be placed properly onto the impression cylinders in the correct positions.

WIFAG assumes no liability for the consequences of faulty production planning or faulty printing press makeready tasks. WIFAG assumes no liability for insufficient performance of the printing press, unsatisfactory printing quality, or excessively high wastage due to errors in production preparation or improper makeready of the printing press.

1.3 Printing press operation

The operation of the printing press in production requires trained personnel who are adequately qualified for this task.

To understand the particularities of WIFAG newspaper printing presses and to be able to perform the specific work necessary for operation of the press in production, the personnel concerned must attend and successfully complete all the relevant courses provided by WIFAG and the automation system suppliers (central control console, production management computer, etc.).

The printers essentially operate the machine from the control consoles. The functions of the central control consoles are described in the relevant manuals. These manuals are part of the operating instructions.

Local commands to operate the printing press can be given via the control panels (displays) installed directly on the press. The functions of the local operating panels of the autopasters, printing couples, angle-bar modules and folder are described in the operating instructions.

The newspaper printing press must be operated and set correctly if it is to provide its full production output and print quality. The following adjustments are particularly important in the production mode of the printing press:

- A prerequisite for stable web conveyance through the printing press is that the set web tension values are correct for the infeed units, the lead values are correct for the draw rollers, and the draw rollers are correctly set. The web tensions for the individual webs can be specified for the corresponding infeed units from the control console. The lead values for the draw rollers can also be specified from the control console.
  If the web tensions and leads are not properly set, reliable web conveyance through the printing press cannot be guaranteed. If the settings are not right, web breaks and other problems may result.
- If the individual newspaper pages are to have a correct white margin around the print image, the corresponding ribbons must be cut through in the right places on the cutting cylinder in the folder. Setting the cutting position ensures that, for instance in broadsheet format, the lower and upper white margin of the newspaper pages are the right height. Cutting position errors can also be due to incorrectly set web tensions and leads.
- If automatic cutting position control is active, it can – within certain limits – automatically correct any cutting position errors that occur.
- If a good print quality is to be achieved in multi-color printing, the print images for the individual printing inks, e.g. Cyan, Magenta, Yellow, Black, must be appropriately printed on top of one another. This requires the corresponding sidelay registers and circumferential registers to be set correctly. Sidelay registers and circumferential registers can be set from the control console. If the sidelay registers or circumferential registers are incorrectly set, the print images will be faulty.
- Color register errors can be caused by flaws in the making of the printing plates or by incorrectly set web tensions. If a circumferential register control is active, it can – within certain limits – automatically correct any circumferential register errors that occur.
- In newspaper printing with a web-feed printing press using the offset printing method, ink and water are applied to the paper web during the printing process. To obtain a satisfactory print image, it is important to carry out the correct settings for both water and ink. The thickness of the ink layer for the individual printing inks, e.g. Cyan, Magenta, Yellow, Black, can be adjusted from the control console in individual ink zones using the corresponding ink keys. The amount of water can be adjusted from the control console using the corresponding dampening unit, for example for half the width of a broadsheet page.

- If too little water is fed to a printing plate surface, a phenomenon known as “scumming” can occur in extreme cases. And if too much water is fed to a printing plate surface a phenomenon known as emulsifying can occur in extreme cases. In both cases the print results are absolutely flawed. If automatic ink thickness regulation is active, it can automatically correct (within certain limits) deviations in the thickness of the individually applied ink layers on the paper webs (corresponding to appropriate full-tone density).

WIFAG cannot assume any responsibility for the consequences of incorrect operation or inadequate setting of the printing press. WIFAG assumes no liability for unavailability of the printing press, insufficient production performance, unsatisfactory printing quality, or excessively high wastage due to operating errors or incorrect settings.

1.4 Machine settings and read-back values

Before an individual production run can begin, the printing press is preset using the automation system so that on startup marketable newspaper copies can quickly be printed and the startup wastage remains low. It is not possible to keep startup wastage low without good values for presettings.

The presettings of the printing press and the recorded read-back values in production mode require trained personnel who are sufficiently qualified for this work.

To understand the particularities of WIFAG newspaper printing presses and to be able to perform the specific functions for presetting the machine and for detecting read-back values, it is imperative that the relevant personnel attend and successfully complete the corresponding courses provided by WIFAG and the automation system suppliers (central control console, production management computer, etc.).

The presettings of the printing press are performed using the production management computer and the control console system. The functions of the production management computer system and the control console system are described in the corresponding manuals. These manuals are part of the operating instructions.

The presettings of the web tensions (autopaster and infeed units), the leads of draw rollers, the cutting positions of the individual ribbons (ribbon registers), and the color registers (circumference register, sidelay register) are done primarily with read-back values that were saved during an earlier, similar production run.

Poor presettings are often the result of read-back errors (noting) in an earlier production run or of inadequate consideration of the machine configurations, paper guides and materials (e.g. the paper types) used in the current production run. If varying materials with vastly different properties (e.g. different paper types or different ink types) are used, they need to be taken into consideration during production planning and in the machine settings.

The zone-wide ink keys and the half-page-wide dampening units are preset depending on the production speed and the surface coverage of the printing plates concerned. The faster the press is running, the more ink and dampening solution per time unit is required for printing.

The surface coverage of the printing plates is determined in the makeready phase by software-implemented scanning of the digital plate contents (Softscan function) or by optical scanning of the printing plates (plate scanner). It is not possible to preset the ink keys and dampening units of the printing press properly without complete and correct surface coverage values for the individual production runs.

The functions for presetting the printing press for the various production runs and the systematic procedure for saving (tracking) the read-back values are explained and practiced in the WIFAG training courses for printers and in those of the automation system suppliers (control consoles, production management computer, etc.). The same applies for the automatic presetting of the ink/water metering according to production speed and surface coverage values for the individual ink zones of the printing plates.

WIFAG cannot assume any responsibility for high startup waste or poor print quality during startup caused by inadequate preset values if the incorrect preset values are caused by operating errors, e.g. during read-back, by inadequate consideration of material properties or by a lack of surface coverage values.

1.5 Requirements for consumables

The printing press can only reliably provide the specified production outputs if the consumables used for newspaper printing are suitable and comply with WIFAG specifications. This applies in particular to:

- Rubber blankets
- Paper
- Printing inks
- Dampening solution and dampener additives
- Printing plates
- Cleaning agent

The use of unsuitable materials can affect the production output and the print quality. Unsuitable materials can also cause malfunctions in the operation of the printing press or even cause damage to the press.

WIFAG strongly recommends that you clarify the use of any unusual or new consumables with WIFAG beforehand.

WIFAG assumes no liability for production performance problems or printing quality problems or malfunctions or damage to the printing press caused by using inappropriate consumables.

1.6 Supply systems and ambient conditions

The printing press functions reliably only if the external supply systems connected to the press satisfy the specifications and function dependably.

This applies in particular to the electrical supply system. The electrical mains supply must comply with specifications (voltage, frequency) and provide electrical power continuously and reliably. Interruptions, overvoltage (e.g. lightening) and irregular fluctuations in the electrical energy supply may cause serious operational malfunctions of the printing press.

Certain computers of the automation system of the printing press are connected to an uninterruptible power supply (emergency power system) that provides these computers with energy in the event of an electrical power failure of the power supply network in an emergency for a limited time with electrical energy from batteries. This ensures that certain basic functions of the machine control system, of the central control consoles, and of the production computers of the printing press are maintained for a limited time if there is an electrical failure. If the batteries do not function or are not charged, the uninterruptible power supply cannot provide electrical energy in the event of a power network failure.

The printing press requires a supply of cooling water, particularly for cooling the electric motors and drive electronics. The supply of cooling water must comply with specifications (temperature, water quantity) and operate continuously and reliably. The printing press cannot be operated without a sufficient supply of cooling water at the appropriate temperature.

The ambient conditions in the printing shop in which the press is set up must be suitable for operating a newspaper printing press. This applies in particular to the room temperature and relative humidity, adequate ventilation, and dust-free conditions.

The level of electromagnetic interference from external causes in the printing shop must not exceed the usual levels in industrial plants. Extreme levels of electromagnetic interference can cause the electronics of the printing press to malfunction; they can also damage the press.

The automation system of the printing press uses existing data networks (local area networks) in the building and printing shop to transmit data. Failures or performance reductions in the existing data networks in the building of the printing shop can therefore under certain conditions negatively impact the functioning of the automation system of the newspaper printing press.

WIFAG cannot assume any responsibility for production disruptions of the printing press or damage to the printing press caused by faults or failures in external supply systems or by inappropriate ambient conditions inside the printing shop.

1.7 Maintenance of the printing press

Large industrial production plants such as newspaper printing presses must receive systematic maintenance if they are to provide the specified availability, production output and production quality, reliably and sustainably.

The maintenance of the printing press requires the assignment of trained personnel who are sufficiently qualified for this task. The technical qualification requirements expected of the personnel assigned to maintenance work on the printing press are specified in the operating instructions.

To be able to carry out the specific maintenance activities, it is imperative that the personnel concerned attend and successfully complete the relevant courses provided by WIFAG and the automation system suppliers (central control consoles, production management computers, etc.). Every course participant who has successfully participated in WIFAG training courses and training courses given by automation system suppliers (central control console, production management computer, etc.) receives a certificate confirming course completion.

The maintenance work to be carried out is described in detail in the operating instructions.

The specified maintenance work is to be carried out systematically and is mandatory if the printing press is to achieve the performance values specified by WIFAG, particularly with regard to availability, production output, print quality and waste.

If the required maintenance work is not carried out properly, WIFAG cannot assume any guarantee that the promised performance values of the printing press with regard to availability, production output, print quality and waste can be achieved.

WIFAG strongly recommends that maintenance schedules be kept so that:

- maintenance activities can be systematically planned far in advance
- maintenance activities can be documented to show which maintenance activities were performed when and by whom
- it can be verified at a later time that the required maintenance activities were performed completely and properly

1.8 Spare parts

Initial provision of spare parts for the printing press is available at the installation site of the printing press.

The first set of spare parts in the standard spare parts packet is included in the WIFAG printing press scope of delivery.

Responsibility for maintaining a sufficient stock of spare parts at all times in order to guarantee production lies with the owner or operator of the printing press. WIFAG cannot assume any responsibility for ensuring that the spare parts store for the printing press is sufficiently stocked at all times.

Only original WIFAG spare parts or spare parts that comply with WIFAG specifications may be used on the printing press. For the computer systems in the supplied control system of the printing press (central control consoles, production management computers, etc.) from the automation system suppliers, only original spare parts from the automation system suppliers or spare parts complying with specifications of the automation systems suppliers are permitted to be used.

The use of inappropriate spare parts may result in serious malfunctions of the printing press or to damage to the printing press. The use of inappropriate spare parts can have a very negative influence on the availability, production performance and printing quality of the printing press. If inappropriate spare parts are used on the printing press, the relevant WIFAG guarantee is rendered void.

Spare parts must be properly stored if they are to fulfill their purpose and operate correctly when fitted. If spare parts are stored for longer periods they must be adequately maintained so that they remain fully functional. If spare parts are not properly stored and maintained, it cannot be excluded that they will not function correctly when fitted.

The maintenance of spare parts requires the assignment of trained personnel who are sufficiently qualified for these tasks. The technical qualification requirements expected of the personnel assigned to maintenance work on the printing press are specified in the operating instructions.

WIFAG cannot assume any responsibility for disruptions in production that are due to the store of spare parts being insufficiently well stocked by the operator of the printing press; to the use of unsuitable spare parts (which do not comply with WIFAG specifications) or to spare parts that are not properly stored and/or maintained. WIFAG cannot assume any responsibility for negative repercussions on the availability, production output or print quality of the printing press caused by defects in the spare parts management by the operator of the printing press.

1.9 Guarantee

The guarantee for components and assemblies is rendered void if problems are caused by prohibited or inappropriate physical, chemical or electrical influences, if caused by use other than the intended purpose, or caused by generally abnormal ambient conditions and/or improper operating conditions.
Likewise, the guarantee is rendered void if problems on the device can be traced to transport damage for which WIFAG is not responsible, if damage is a result of improper installation and assembly, misuse, non-observance of operating and/or assembly instructions or is due to lacking or improper maintenance.
Warranty claims expire if repairs or interventions are carried out by persons who are not approved and authorized by WIFAG.

2 Operating instructions information

Note

Before you begin work, please read the information about the operating instructions Reg. 1 Introduction and product overview in the *System* file. This information will make it easier for you to work with the operating instructions and the product.

3 Overview of the system

Note

You will find an overview of the function groups of the system in Chapt. 9 Overview of the system in Reg. 1 Introduction and product overview in the *System* file.

4 Overview

4.1 Angle-bar module

We differentiate between two angle-bar modules:

- Fig. 1 Angle-bar module right of the folder and
- Fig. 2 Angle-bar module left of the folder.

Both angle-bar modules function identically, but the components are mirrored in their arrangement.

- Draw roller with pressure rollers
- Cutting unit with bottom cutter shaft
- Angle-bar system with right-angle web lead rollers
- Partial ribbon register (optional)
- Secondary register (optional)
- Ribbon register
- Blast air for angle bars
- Dust extraction for cutter

These components are configured and deployed based on production mode.
For each angle-bar module two angle bar systems can be installed.

Fig. 1 Angle-bar module right of the folder

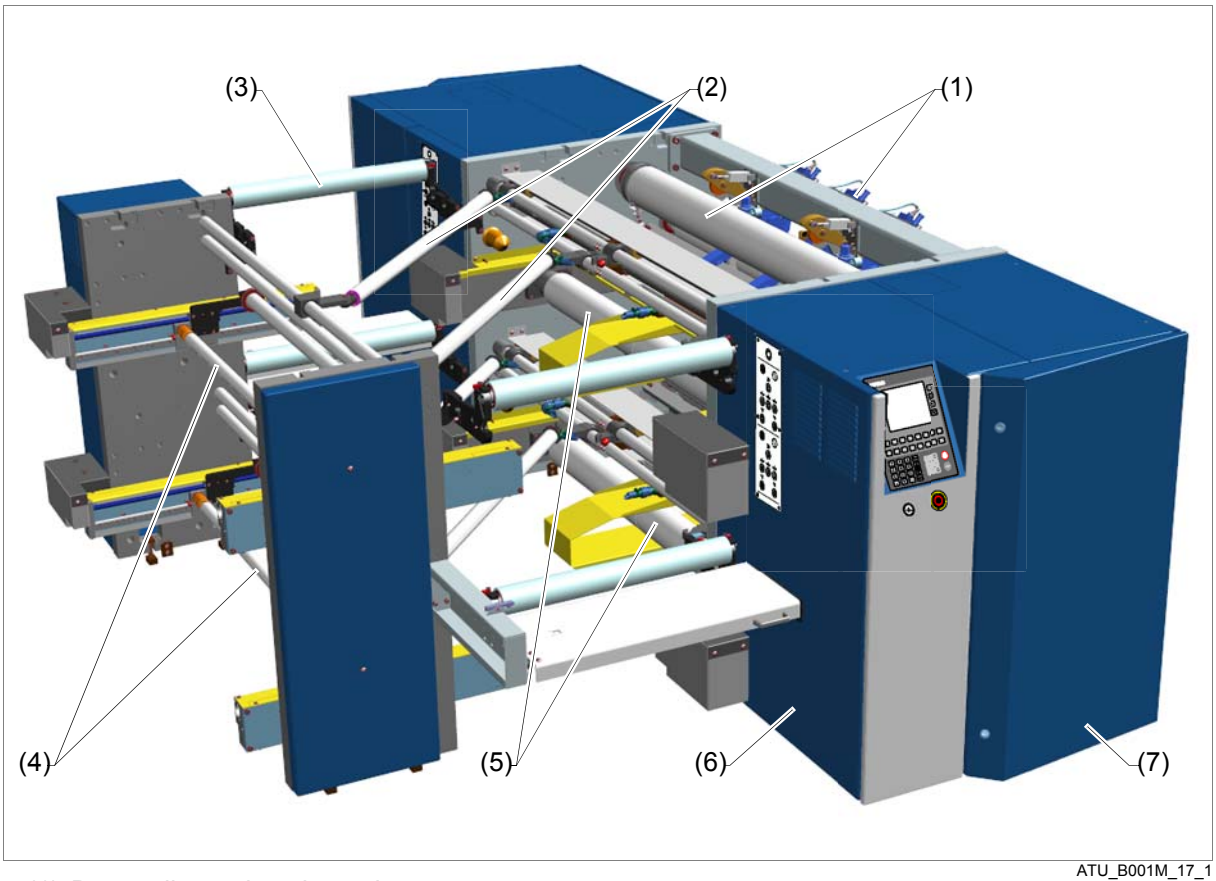

ATU_B001M_17_1

(1) Draw roller and cutting unit
(2) Angle-bar unit
(3) Right angle web lead rollers
(4) Secondary register
(5) Ribbon register
(6) Blast air for angle bars
(7) Dust extraction for cutter

Fig. 2 Angle-bar module left of the folder

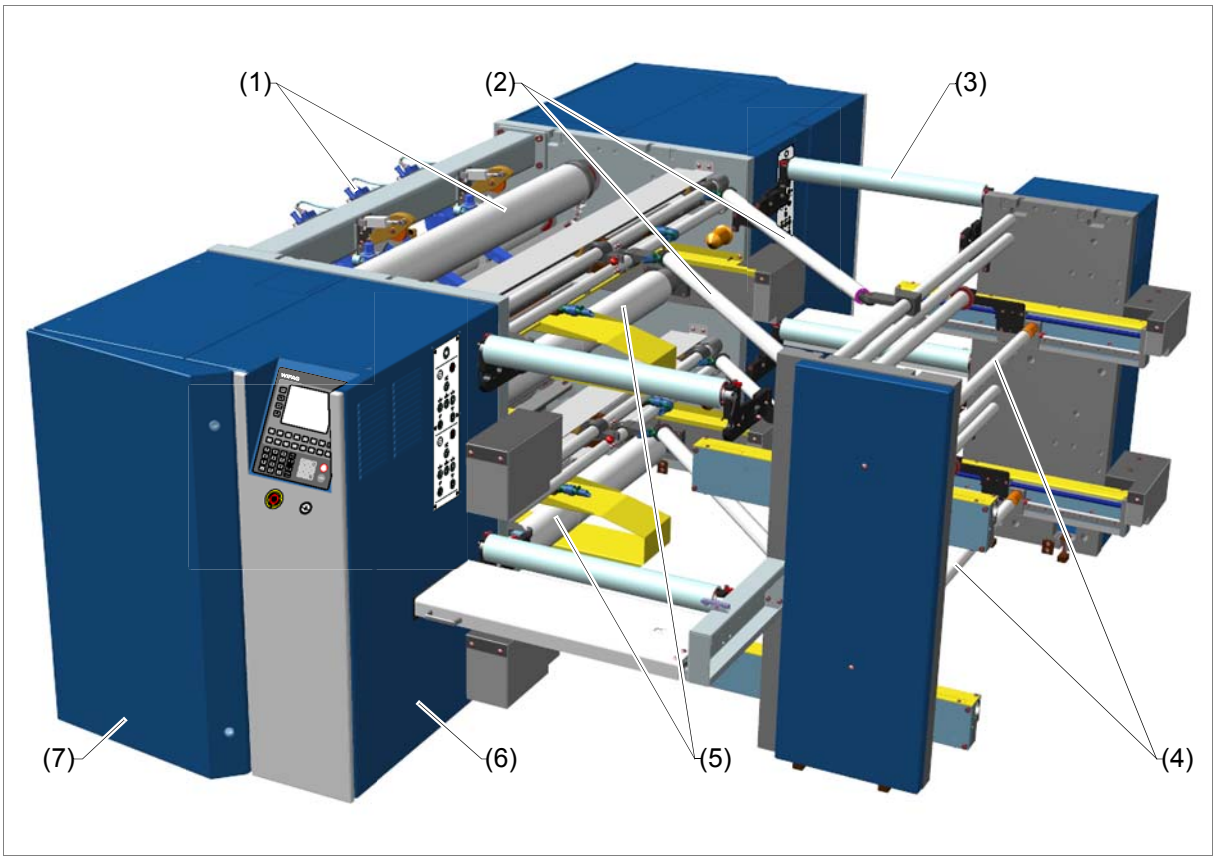

ATU_B001M_17

(1) Draw roller and cutting unit
(2) Angle-bar unit
(3) Right angle web lead rollers
(4) Secondary register
(5) Ribbon register
(6) Blast air for angle bars
(7) Dust extraction for cutter

2 Important for your safety

1 Basic information **2.3**

2 Safety sectors **2.4**

3 Working stations of danger zones **2.5**
3.1 Overview **2.6**
3.1.1 Angle-bar module 2.7
3.2 Register adjustment danger zone **2.8**
3.3 Angle bar system danger zone **2.10**
3.4 Cutting unit danger zone **2.11**
3.5 Pressure rollers danger zone **2.12**
3.6 Draw roller / bottom cutter shaft danger zone **2.13**
3.7 Feed-in device danger zone **2.14**

4 Protective devices **2.16**
4.1 Overview **2.16**
4.1.1 Angle-bar module 2.17
4.2 Guards and covers **2.19**

5 Safety switch of the power supply **2.20**
5.1 Switch current supply on and off **2.21**

6 key-operated switch **2.24**

7 Indicator elements and warning signals **2.25**

8 Stop functions **2.28**

1 Basic information

Although your WIFAG system employs state-of-the-art technology and complies with recognized safety regulations, hazards may occur!

Specification

Observe the described danger zones during all work and carry out the described measures!

Specification

Before you begin work, please read Reg. 2 Important for your safety in the *System* file. This information describes how to work safely with the system and avoid accidents.

Specification

Upgrade and reconfiguration work on the system may be performed only by qualified WIFAG personnel for safety reasons.

Specification

All replacement, adjustment and commissioning work not described in these operating instructions may be performed only by qualified WIFAG personnel for safety reasons.

2 Safety sectors

Note

There are no safety sectors present on the angle-bar module.

3 Working stations of danger zones

Contents

This chapter contains the following information:

- Chapt. 3.1 Overview
- Chapt. 3.2 Register adjustment danger zone
- Chapt. 3.3 Angle bar system danger zone
- Chapt. 3.4 Cutting unit danger zone
- Chapt. 3.5 Pressure rollers danger zone
- Chapt. 3.6 Draw roller / bottom cutter shaft danger zone
- Chapt. 3.7 Feed-in device danger zone

3.1 Overview

Specification

Take note of the following described danger zones during all work and carry out the described measures!

3.1.1 Angle-bar module

Fig. 1 Danger zones, view from SI

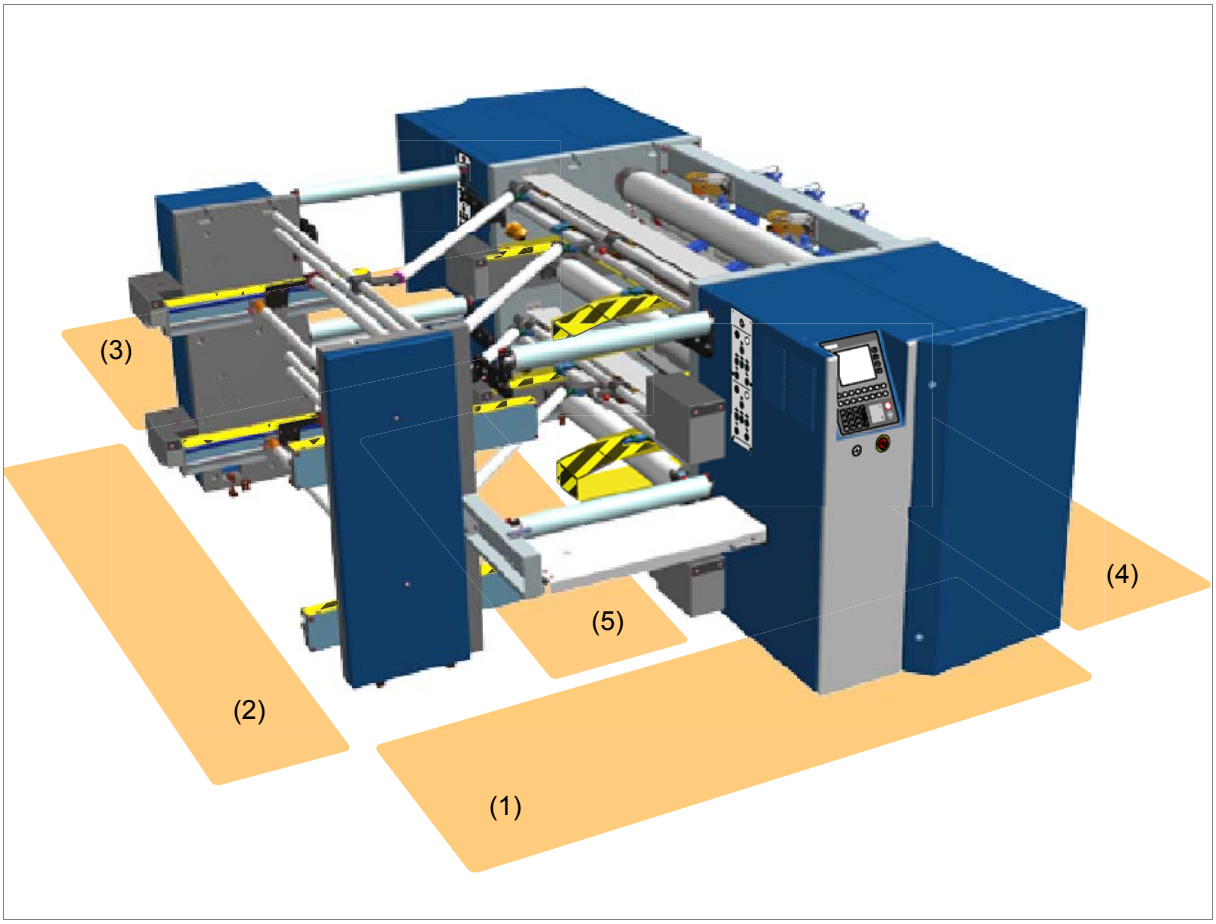

ATU_B010S_04

(1) Workstation on the operating side, side I
(Chapt. 3.2 Register adjustment danger zone)
(Chapt. 3.3 Angle bar system danger zone)
(Chapt. 3.7 Feed-in device danger zone)

(2) Workstation inside left (register)
(Chapt. 3.2 Register adjustment danger zone)

(3) Workstation on the drive side, side II
(Chapt. 3.2 Register adjustment danger zone)
(Chapt. 3.3 Angle bar system danger zone)
(Chapt. 3.6 Draw roller / bottom cutter shaft danger zone)
(Chapt. 3.7 Feed-in device danger zone)

(4) Workstation inside right (cutting unit, pressure rollers)
(Chapt. 3.4 Cutting unit danger zone)
(Chapt. 3.5 Pressure rollers danger zone)
(Chapt. 3.6 Draw roller / bottom cutter shaft danger zone)

(5) Workstation inside middle
(Chapt. 3.2 Register adjustment danger zone)
(Chapt. 3.3 Angle bar system danger zone)
(Chapt. 3.7 Feed-in device danger zone)

3.2 Register adjustment danger zone

Zones 1, 2, 3, 5 (Fig. 1)

WARNING	**Risk of injury!** **Risk of being trapped and crushed** by moving parts! => Electrically disable function group (actuate pushbutton *SAFE-STOP*). => Place *Work in progress!* warning signs on the corre-sponding terminals and control panels.

WARNING	**Risk of injury!** **Risk of being trapped and crushed** by moving parts! => Before pressing a pushbutton on the control panel, make certain that nobody is in the danger zone.

Note

For further information about adjustment area of the ribbon register see Chapt. 4 Basic settings in Reg. 14 Ribbon register in *this* file.

Fig. 2 Secondary register (optional)

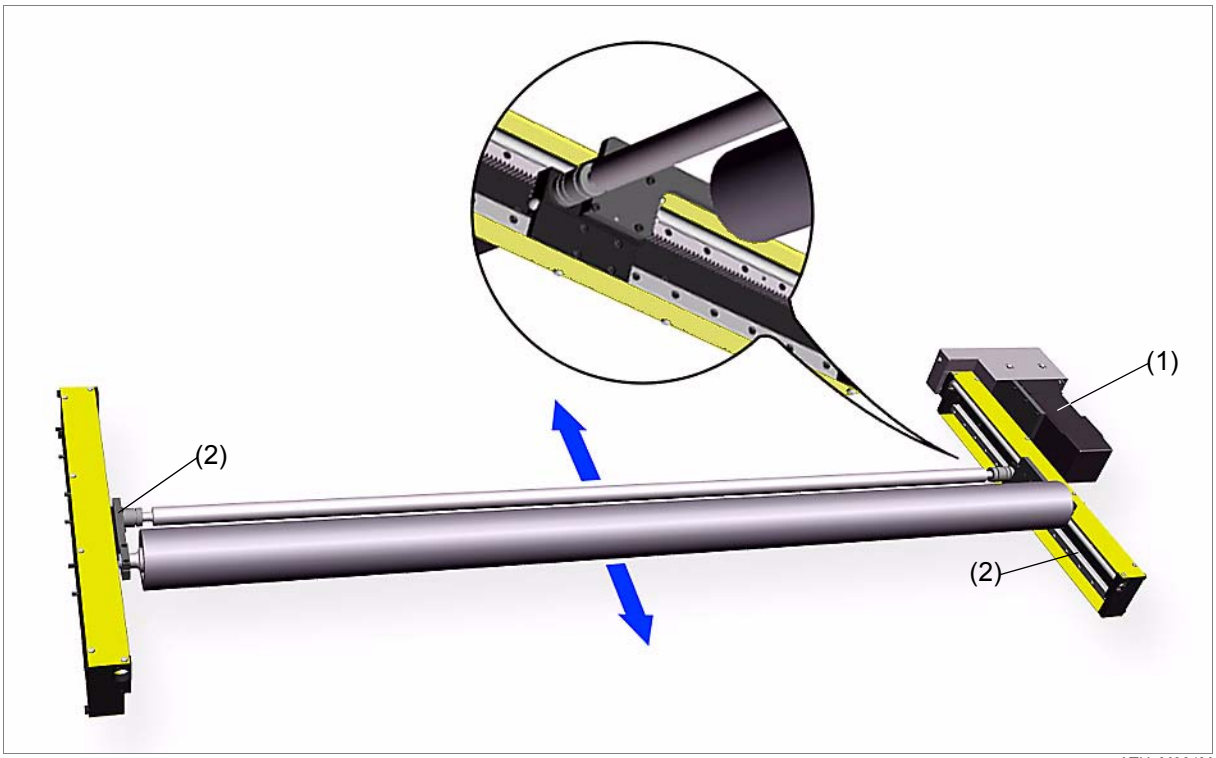

ATU_M001M

(1) drive
(2) Linear guides

Fig. 3 Ribbon register

ATU_O001M_01

(1) drive
(2) Linear guides

3.3 Angle bar system danger zone

Zones 1, 3, 5 (Fig. 1)

⚠ WARNING	**Risk of injury!** **Risk of being trapped and crushed** by moving parts! => Electrically disable function group (actuate pushbutton *SAFE-STOP*). => Place *Work in progress!* warning signs on the corresponding terminals and control panels.

⚠ WARNING	**Risk of injury!** **Risk of being trapped and crushed** by moving parts! => Before pressing a pushbutton on the control panel, make certain that nobody is in the danger zone.

Note

For further information about the area of the angle bars system see Chapt. 4 Basic settings in Reg. 11 Angle-bar system in *this* file.

Fig. 4 Angle-bar system

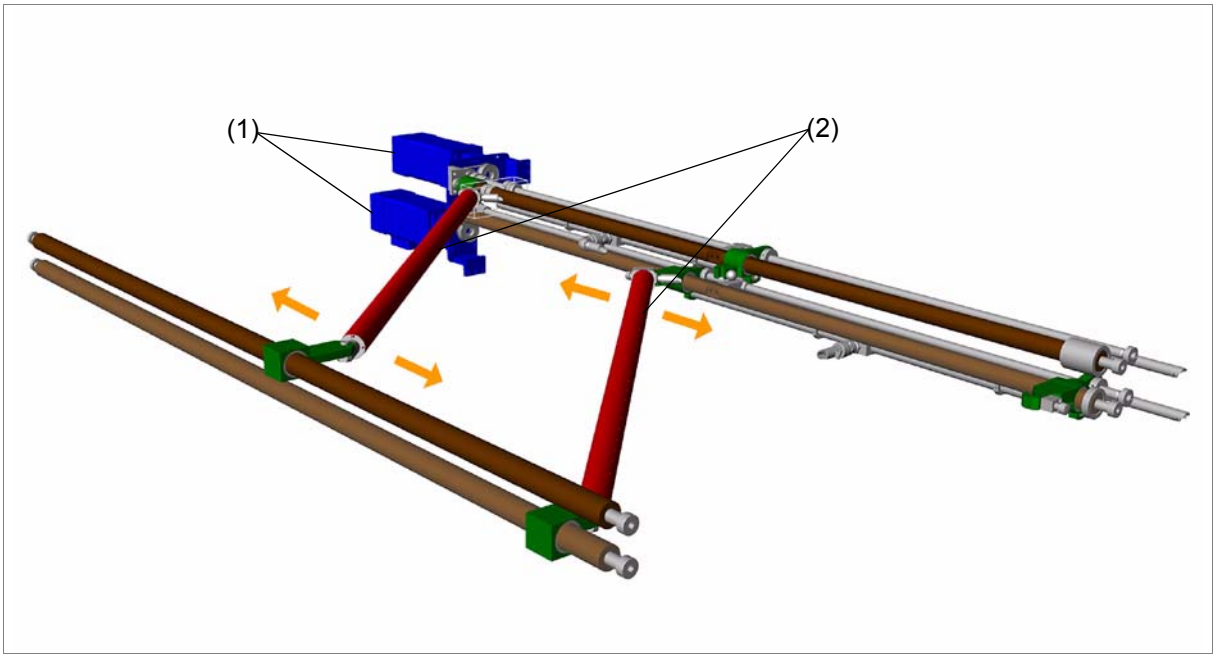

ATU_L001M_02

(1) Angle-bar drives
(2) Angle bars

3.4 Cutting unit danger zone

Area 4 (Fig. 1)

WARNING	**Risk of injury!** **Injury through cuts** from the cutter! => Electrically disable function group (actuate pushbutton *SAFE-STOP*). => Place *Work in progress!* warning signs on the corresponding terminals and control panels.

WARNING	**Risk of injury!** **Injury through cuts** from the cutter! => Be careful when a web is drawn in. => Keep hands at a safe distance from the cutter danger zone.

Note

For further information about the area of the cutter unit see Reg. 9 Draw roller and cutting unit in *this* file.

Fig. 5 Lower cutter shaft and cutting unit

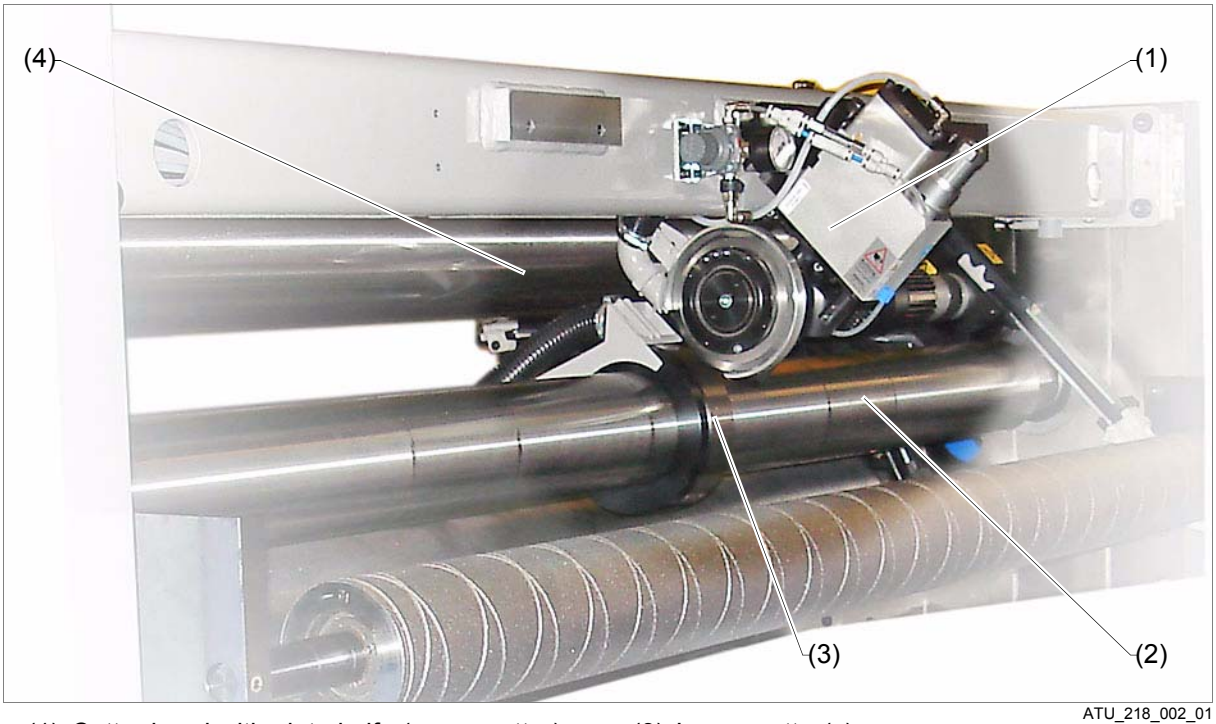

ATU_218_002_01

(1) Cutter head with plate knife (upper cutter)
(2) Lower cutter shaft
(3) Lower cutter(s)
(4) Draw roller

3.5 Pressure rollers danger zone

Area 4 (Fig. 1)

WARNING	**Risk of injury!** **Risk of being trapped and crushed** by moving parts! => Electrically disable function group (actuate pushbutton *SAFE-STOP*). => Place *Work in progress!* warning signs on the corresponding terminals and control panels.

WARNING	**Risk of injury!** **Risk of being trapped and crushed** by rotating pressure rollers! => Be careful when a web is drawn in. => Keep hands at a safe distance from the danger zone of the pressure rollers.

Note

For further information about the zone of the pressure roller see Reg. 9 Draw roller and cutting unit.

Fig. 6 Draw roller

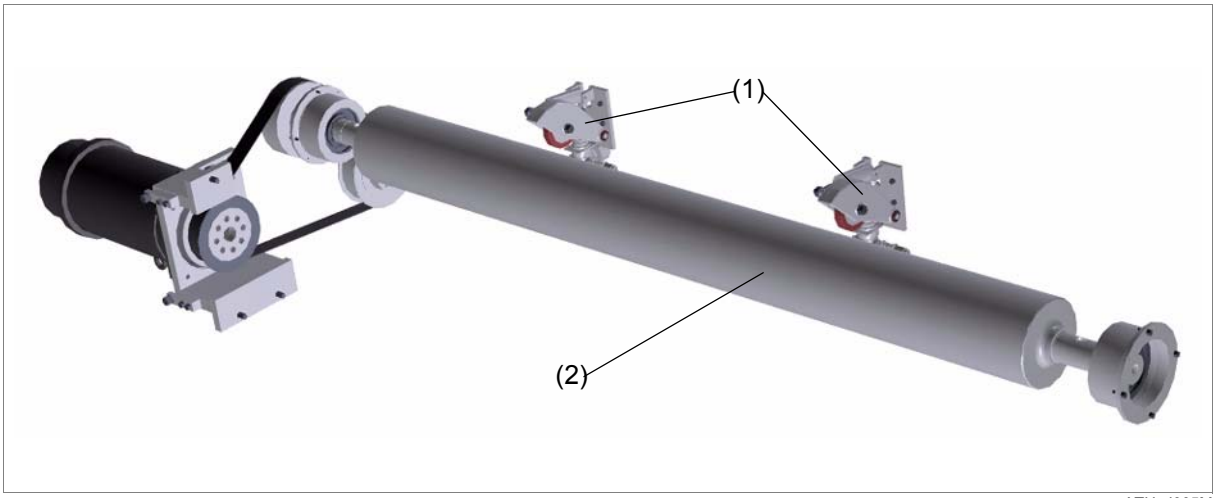

ATU_J005M

(1) Pressure rollers (2) Draw roller

3.6 Draw roller / bottom cutter shaft danger zone

Areas 3, 4 (Fig. 1)

⚠ WARNING	**Risk of injury!** **Risk of being trapped and crushed** by rotating timing belt pulleys and timing belt! => Electrically disable function group (actuate pushbutton *SAFE-STOP*). => Place *Work in progress!* warning signs on the corresponding terminals and control panels.

Note

There is danger only when the switchgear cabinet is open. The doors are locked with a lock.

Note

For further information about the area of the cutter unit see Reg. 9 Draw roller and cutting unit in *this* file.

Fig. 7 Timing belt danger zone, side II left

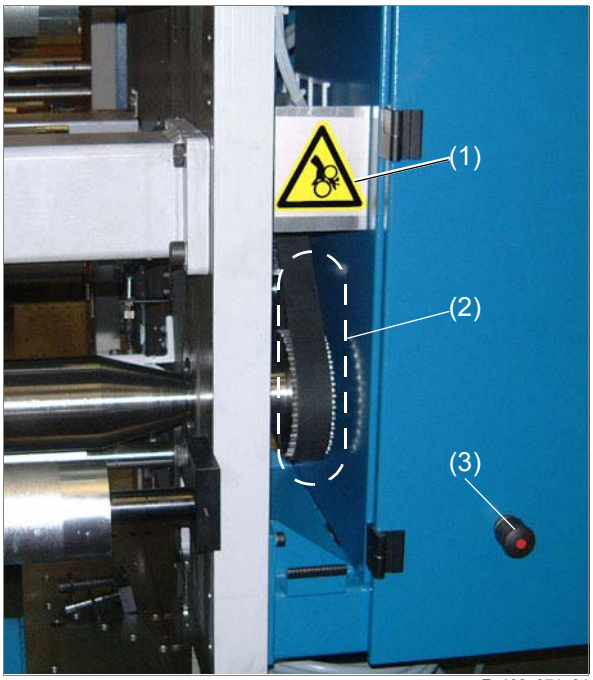

F_138_071_01

(1) Warning notice
(2) Timing belt danger zone
(3) *SAFE-STOP* pushbutton

Fig. 8 Timing belt danger zone, side II

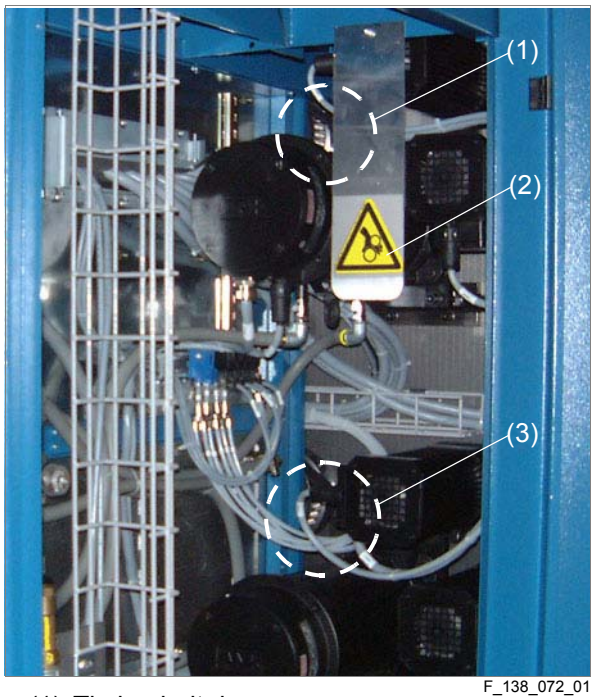

F_138_072_01

(1) Timing belt danger zone
(2) Warning notice
(3) Timing belt danger zone

3.7 Feed-in device danger zone

Zones 2, 3, 4, 5 (Fig. 1)

For work on the feed-in device:

⚠ WARNING	**Risk of injury!** **Danger of crushing** and **cutting injuries** on switches and switch crossings! => Electrically disable function group (actuate pushbutton *SAFE-STOP*). => Place *Work in progress!* warning signs on the corre-sponding terminals and control panels. => Be careful when working on switches and switch crossings. => Keep hands at a safe distance from the switches and switch crossings.

Fig. 9 Feed-in device danger zone

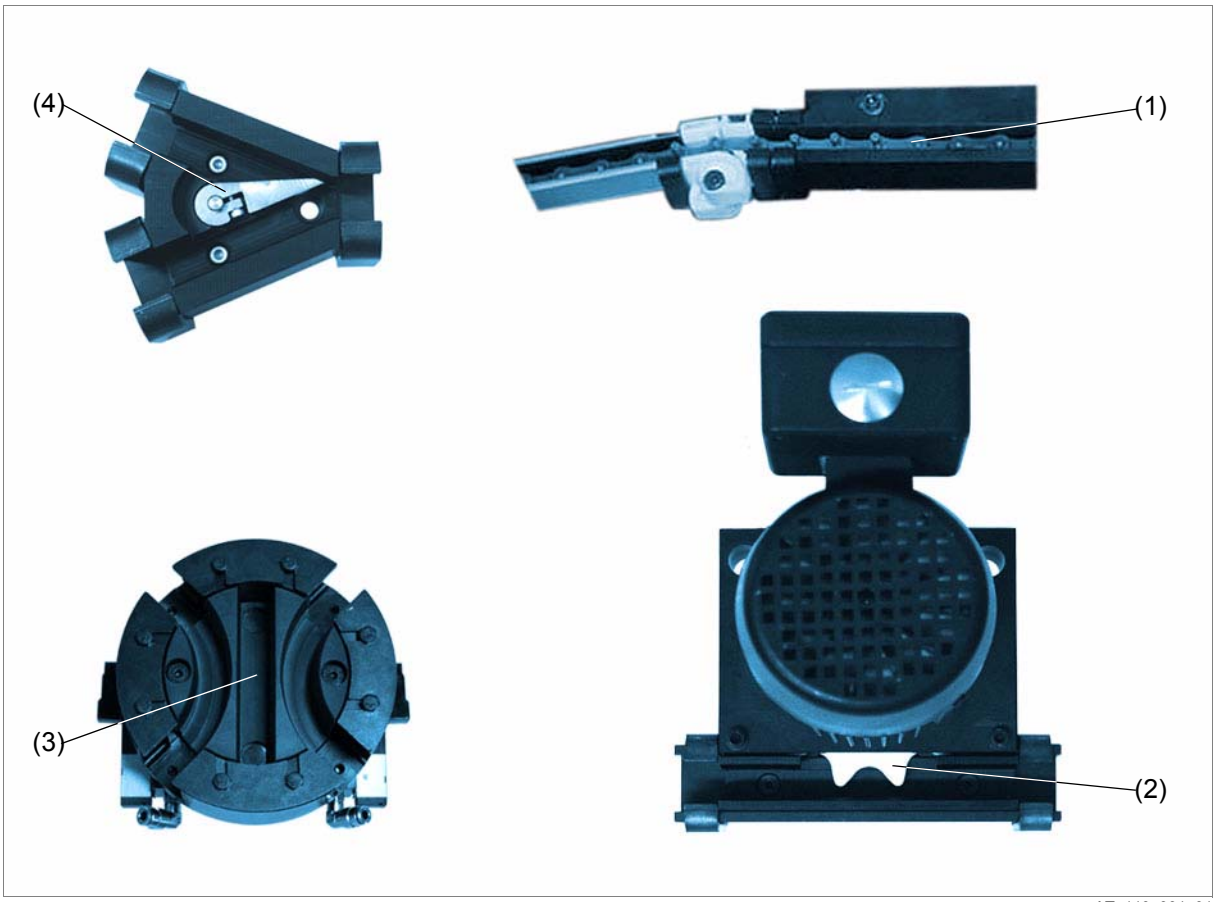

AT_110_001_01

(1) Moving feed-in chain
(2) Rotating chain wheel
(3) Adjusting switch crossing
(4) Adjusting switch

⚠ WARNING	**Risk of injury!** **Danger of crushing** and **cutting injuries** on feed-in chain, switches, switch crossings and rotating system parts! => Do not initiate any commands when people are in the danger zone. => Keep hands at a safe distance from the feed-in change, switches and switch crossings. => Keep at a distance from the danger zone while the web is feeding in.

Fig. 10 Autopaster exit station danger zone

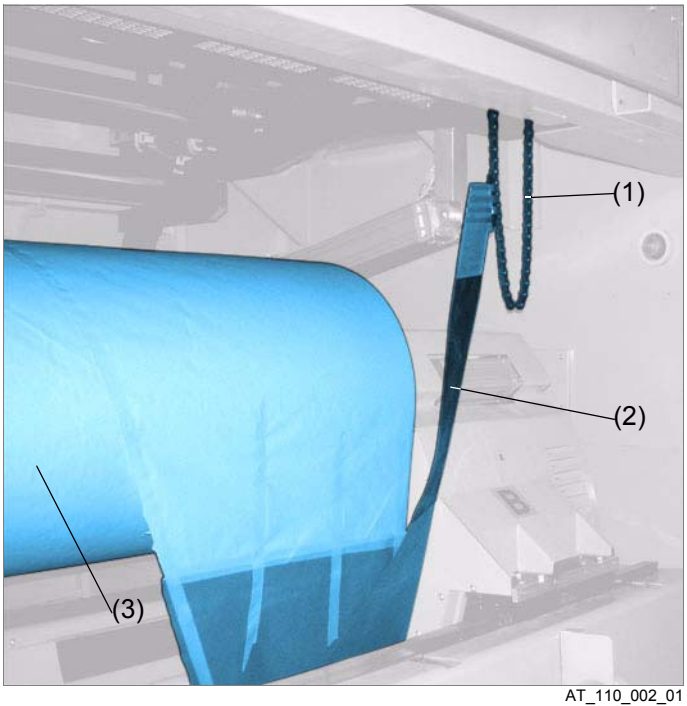

AT_110_002_01

(1) Moving in feed-in chain
(2) Web lead
(3) Paper roll

Note

For further information about the danger zones of the feed-in device please see Chapt. 2 Important for your safety in Reg. 15 Feed-in device in the *System* file.

4 Protective devices

Contents

This chapter contains the following information:

- Chapt. 4.1 Overview
- Chapt. 4.2 Guards and covers

4.1 Overview

Specification

All safety devices provided by the manufacturer must be present and fully functional. They must not be disassembled, bridged or modified.
If there is a malfunction or failure of a protective device, the system must be immediately brought to a standstill until the damage has been properly remedied and the protective device has been checked in accordance with the WIFAG specifications!

4.1.1 Angle-bar module

Fig. 11 Angle-bar module

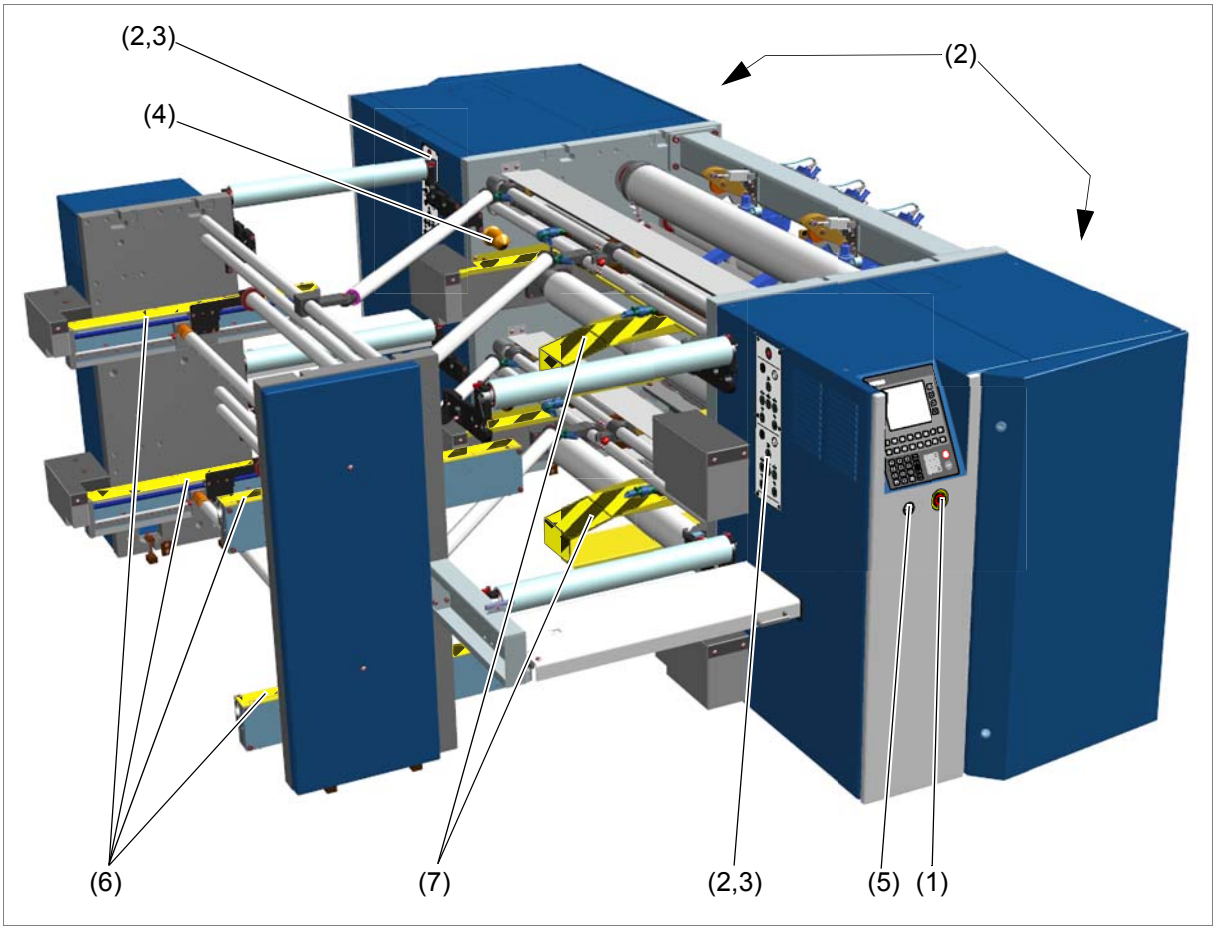

ATU_B010S_03

Tab. 1 Guards, control and display elements on the angle-bar module (Fig. 11)

Pos.	Description	F/S
1	*EMERGENCY-STOP* pushbutton side I	F
2	*SAFE-STOP* pushbuttons	F
3	Control panel with signaling	F
4	Warning lamp / hooter, side II	F
5	Pushbutton for positioning and referencing the register and angle bars	F
6	Guards of the secondary register adjustment (optional)	S
7	Guards of the ribbon register adjustment	S

F = Functional test (proper functioning according to operating instructions Index 2 Important for your safety)
S = Visual inspection (presence and correctly installed)

Fig. 12 Schematic diagram of the ribbon register

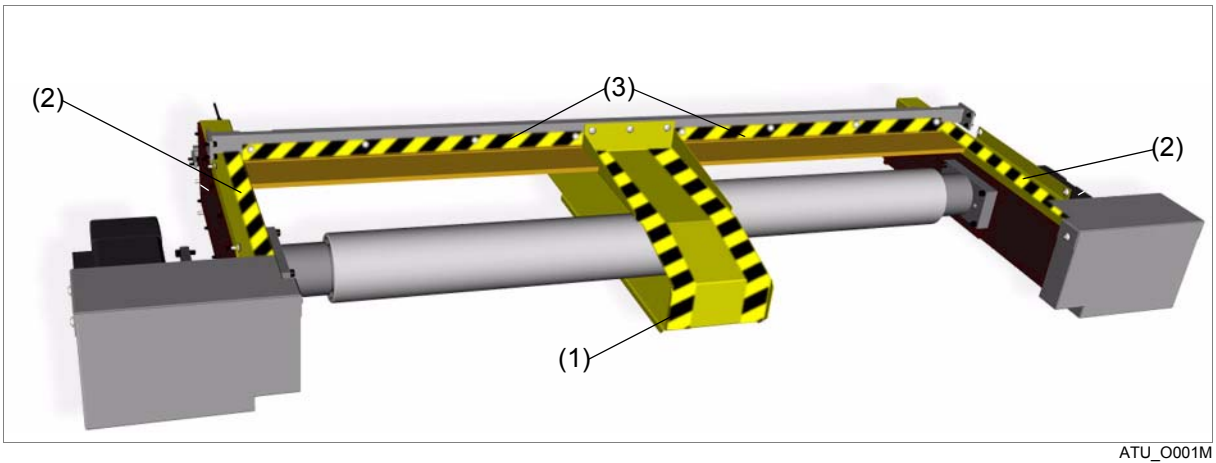

ATU_O001M

Tab. 2 Guard on the ribbon register (Fig. 12)

Pos.	Description	F/S
1	Guards of the ribbon register adjustment	**S**
2	Guard over linear adjustment	**S**
3	Contact guard (brush)	**S**

F = Functional test (proper functioning according to operating instructions)
S = Visual inspection (presence of correct assembly)

4.2 Guards and covers

Only *permanently installed guards* are mounted on the angle-bar module.

Note

A detailed description of the guard system types can be found in Reg. 2 Important for your safety in the *System* file.

5 Safety switch of the power supply

Specification

The safety switch on the vertical busbar is permitted to be actuated only in an emergency or for maintenance and repair work on the concerned system part!

Specification

When repair work of the electrical system of the angle-bar modules is performed, the safety switch must be secured in the *OFF* position with a padlock and a warning sign must be mounted!

On the drive side of the printing unit there is a vertical busbar with safety switches with which the electrical power supply can be completely switched off (Fig. 13). The safety switch can be locked in the *OFF* position with a padlock.

Note

A detailed description of the voltage supply can be found in Reg. 7 Electrical and control systems.

5.1 Switch current supply on and off

The following system parts can be disconnected from the current supply by means of the safety switch:

- Individual angle-bar modules (Fig. 14)

Additional connector sockets cannot be isolated from the voltage supply with the main switch. These remain available and active, even when the system is switched off. Such connector sockets are marked in the switch cabinets with the notice ***EXTERNAL VOLTAGE***.

DANGER	**Danger!** Risk of a lethal electric **shock**! Parts of the system which are switched off can still be supplied with voltage on systems fitted with uninterruptible power supply (UPS). => Work on electrical switching plants may be carried out only by personnel with the relevant training. => Before touching electrical components, ensure that the power to the function group is switched off and check with a voltmeter.

Note

The customer determines how the UPS is connected.

1. Switch the corresponding safety switch (Fig. 14) on or off as per (Fig. 13).
2. Safeguard against unauthorized switching back on.

=> Mount a lock and warning notice!

Switch back on

- The safety switch was secured in the *OFF* position with a padlock.

1. Remove padlock.
2. Switch on safety switch.

> The power supply is again switched on.

Fig. 13 Vertical bus safety switch in the folder

F_198_063_01

(1) Safety switch for folder
(2) Safety switch for folder superstructure / former level
(3) Safety switch
(See the *WIFAG electrical circuit diagram* of the concerned section for which subassembly is connected to the safety switch.)
(4) Safety switch
(See the *WIFAG electrical circuit diagram* of the concerned section for which subassembly is connected to the safety switch.)
(5) Safety switch
(See the *WIFAG electrical circuit diagram* of the concerned section for which subassembly is connected to the safety switch.)
(6) Safety switch secured with padlock
(7) Vertical busbar

Fig. 14 Primary supply of a angle-bar module, view side I

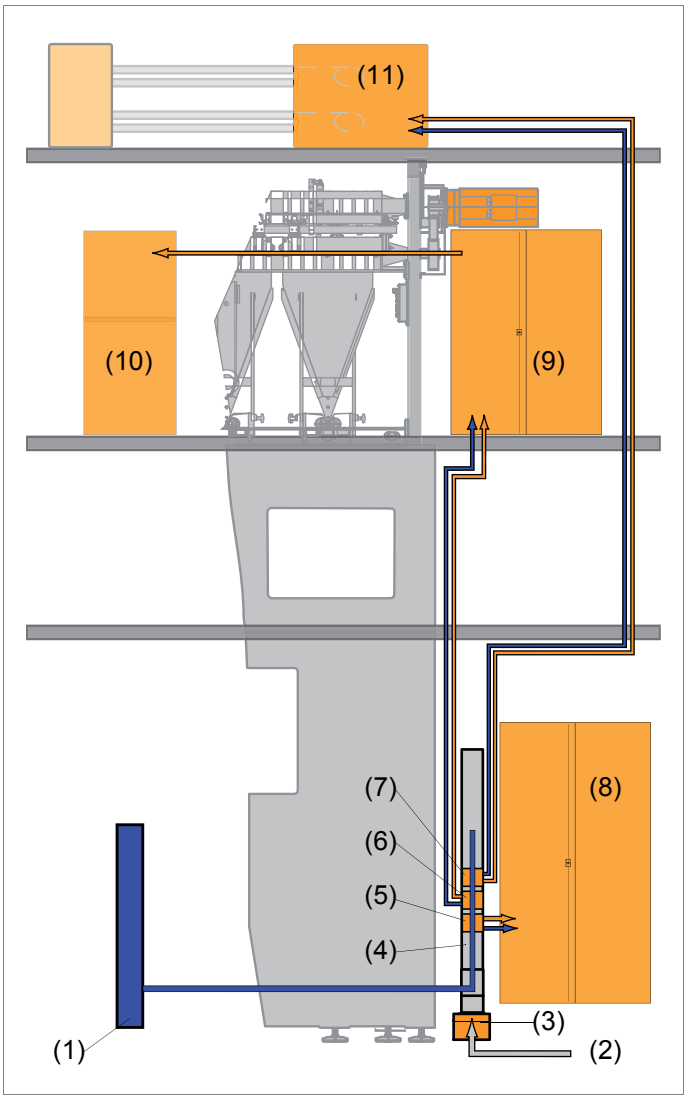

KF140 07 004E_12

(1) Section box with UPS distribution
(2) main supply
(3) Connection adapter
(4) Vertical busbar
(5) Folder circuit breaker
(6) Circuit breaker for former level 1 / mid-section
(7) Circuit breaker for angle-bar module AT1
(8) Folder box FK
(9) Former box TK
(10) SLR box
(11) Angle-bar module box AT

Components supplied with uninterruptible power supply (UPS) are specially marked in the switch cabinets:

Tab. 3 UPS markings

Equipment with UPS voltage in excess of 50 V!	**Equipment carrying a dangerous voltage, also when the main switch is switched off (> 50 V)!**
(orange)	(yellow)

6 key-operated switch

Note

There are no key-operated switches present on the angle-bar modules.

7 Indicator elements and warning signals

Note

The meaning of continuously lit or flashing signal lamps or LEDs integrated in the pushbuttons is indicated in the description of the respective pushbutton. Further information is available in Chapt. 2.2 Overview of pushbuttons and commands in Reg. 3 Control elements.
The indication elements show the status of the system or of specific function groups. In the light test, all signal and warning lights light up continuously.

Note

The positions of the indicator elements and warning signals are shown on the drawing (Fig. 1).

Tab. 4 Safety-relevant indicators

Name	Appearance	Installation location	Display
warning lamp	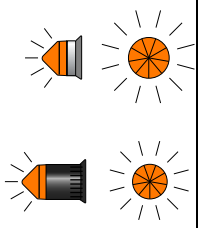 (orange)	Dérouleur Unité d'impression Angle-bar module Folder-midsection Folder-superstructure Folder Portable terminal	**Flashes slowly (all system parts):** • When the system is to be run in a few seconds in isolated or interconnected mode. **Flashes slowly (autopaster):** • When the system is to be run in a few seconds in isolated or interconnected mode. • When a local movement is performed (e.g. moving support arm). **Flashes rapidly (autopaster):** • Flashes (0.3 s on / 0.3 s off) if it is no longer permitted to enter the protected zone because an automated process is about to begin! (E.g. pasting) **Note:** If the hooter sounds at the same speed, it is then necessary to perform an action immediately. (For example, leave the protection zone immediately and press the *RESET* pushbutton to reset entry protection.). See hooter for details. **Warning:** If not all prerequisites are met when an automatic process is about to begin, a machine stop occurs! If necessary, call up fault messages on the terminal. **Lights continuously (all system parts):** • During the enabling time, warning-free enabling time, and while all commands of paper guide drives are running.

Tab. 4 (Cont. Tab.) Safety-relevant indicators

Name	Appearance	Installation location	Display
Signal light	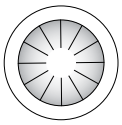 (white)	Dérouleur	**Lights continuously:** • When an action has to be carried out immediately at the autopaster (e.g. resetting the access protection).
klaxon	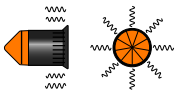 (black)	Dérouleur Unité d'impression Angle-bar module Folder-superstructure Folder-midsection Folder	**Sounds (all system parts):** • When the system part is to be operated in a few seconds. **Exception:** On the printing unit the commands *INSERT PLATES* and *LIFT OUT PLATES* do not trigger the hooter. **Sounds in rapid succession (autopaster):** • Sounds (0.3 sec. on / 0.3 sec. off) if an action needs to be performed immediately because an automated process (e.g. pasting) is about to begin and not all prerequisites have been met! (For example, leave the protection zone immediately and press the *RESET* pushbutton to reset access protection.) **Caution**: If not all prerequisites are met when an automatic process is about to begin, a machine stop occurs! If necessary, call up fault messages on the terminal. **Exceptions**: Run commands that have an effect on only one single autopaster and are self-actuated on it display only a visual warning (see "Warning lamp").

8 Stop functions

Note

The positions of the stop elements are shown on the drawing (Fig. 11).

Tab. 5 Overview of the functions *SAFE-STOP*, *EMERGENCY-STOP*, *EMERGENCY-OFF*, and *fast stop* functions

Name	Symbol	Control location	Effect / display
Pushbutton *HALT*	(red)	Dérouleur Unité d'impression Angle-bar module Folder	The machine is brought to rest along a ramp entered on commissioning, unbraked but controlled.
Pushbutton *SAFE-STOP*			With the *SAFE-STOP* command all drives of the corresponding safety circuit are brought to a standstill as quickly as possible and secured against restarting. Paper running drives of other safety circuits are likewise brought to a standstill if they are interconnected. Locally running drives that are not running paper of other safety circuits can continue to operate.
	(red on yellow)	Portable terminal	Unlock by turning.
	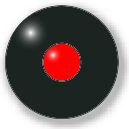 (black and yellow with red signal lamp)	Dérouleur Unité d'impression Angle-bar module Folder-superstructure Folder-midsection Folder Mounted to each control panel with run commands is a *SAFE-STOP* pushbutton.	Unlock by pulling. **Signal lamp lights up continuously** as long as a *SAFE-STOP* button is pressed in the same safety circuit or in this combined group. **Signal lamp flashes** as long as this button is depressed or there is a fault.
Pushbutton *FAST-STOP*	(black/white)	central control console	With the *FAST STOP* command all paper guiding drives of the associated combined group are brought to a standstill as quickly as possible. Locally working, non-paper-guiding drives can continue to operate. Unlock by pulling.

Tab. 5 (Cont. Tab.) Overview of the functions *SAFE-STOP*, *EMERGENCY-STOP*, *EMERGENCY-OFF*, and *fast stop* functions

Name	Symbol	Control location	Effect / display
Pushbutton *EMERGENCY-STOP*	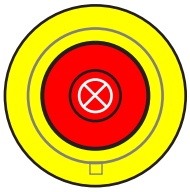 (red on yellow background with red signal lamp)	Dérouleur Printing unit (only on lower bridge) Pillars Angle-bar module Folder-superstructure Folder central control console	With the *EMERGENCY-STOP* command all drives of the section as well as both neighboring sections are brought to a standstill as quickly as possible and secured against restarting. This is independent of the status of the allocation. Unlock by pulling. Afterward replace the two-part sealing cap over the pushbutton. **Warning lamp lights up continuously**, if an *EMERGENCY STOP* button at another point of the section or neighboring section is pressed. **Signal lamp flashes** as long as this button is pressed.
Pushbutton *EMERGENCY-OFF*	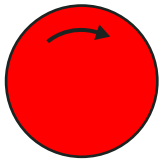 (red)	This push button is mounted by the operator if desired.	With the *EMERGENCY-OFF* pushbutton, the **main power supply (horizontal busbar) is switched off**. The machine runs down uncontrolled (coasts). The pushbutton remains engaged and can only be unlocked with a key. The pushbuttons are mounted at easily visible, freely accessible locations. This pushbutton is to be pressed only in an absolute emergency situation. Reasons for use include: • Danger to persons due to electric shock • Water and fire hazards

Note

A detailed description of the stop functions can be found in Chapt. 16 Stop functions in Reg. 2 Important for your safety in the *System* file.

3 Control elements

1 Overview **3.3**
1.1 Angle-bar module **3.3**

2 Control elements **3.4**
2.1 Angel-bar module control panel **3.5**
2.2 Overview of pushbuttons and commands **3.6**
2.3 Design and operation of the terminals **3.8**
2.3.1 Construction 3.8
2.3.2 Functions of the pushbuttons 3.8
2.3.3 Terminal mask structure 3.11
2.3.4 Terminal mask symbols 3.12
2.3.5 Instructions function 3.14
2.3.6 Help text function 3.15
2.4 Terminal masks **3.16**
2.5 Install terminal software **3.48**

3 Indicators and warning devices **3.49**

4 Malfunction indicators **3.51**

1 Overview

1.1 Angle-bar module

Fig. 1 Angle-bar module

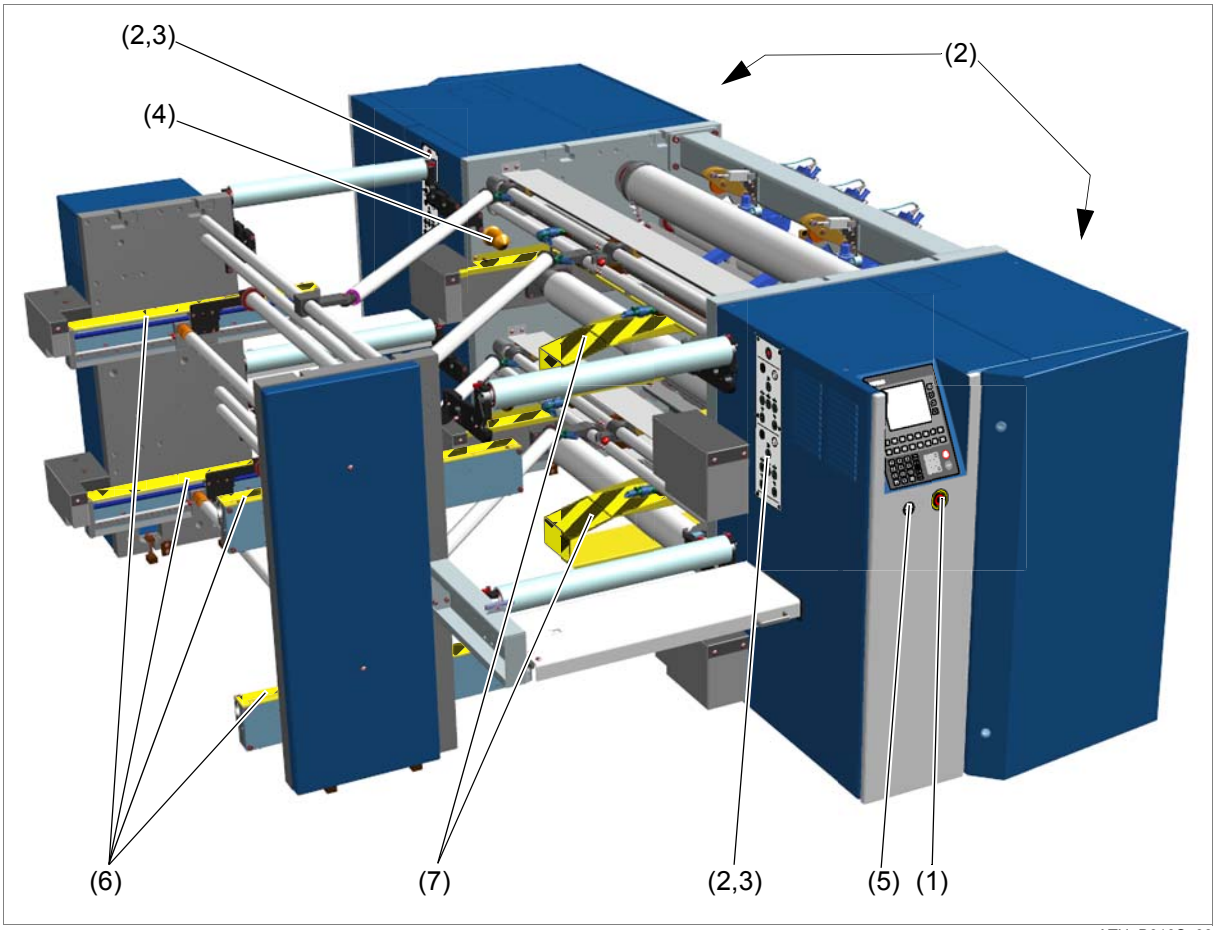

ATU_B010S_03

Tab. 1 Guards, control and display elements on the angle-bar module (Fig. 1)

Pos.	Description	F/S
1	*EMERGENCY-STOP* pushbutton side I	F
2	*SAFE-STOP* pushbuttons	F
3	Control panel with signaling	F
4	Warning lamp / hooter, side II	F
5	Pushbutton for positioning and referencing the register and angle bars	F
6	Guards of the secondary register adjustment	S
7	Guards of the ribbon register adjustment	S

2 Control elements

Contents

This chapter contains the following information:

- Chapt. 2.1 Angel-bar module control panel
- Chapt. 2.2 Overview of pushbuttons and commands
- Chapt. 2.3 Design and operation of the terminals
- Chapt. 2.4 Terminal masks
- Chapt. 2.5 Install terminal software

Different control panels are on the angle-bar module. Each control panel is intended for specific tasks.

2.1 Angel-bar module control panel

Fig. 2 Angel-bar module control panel

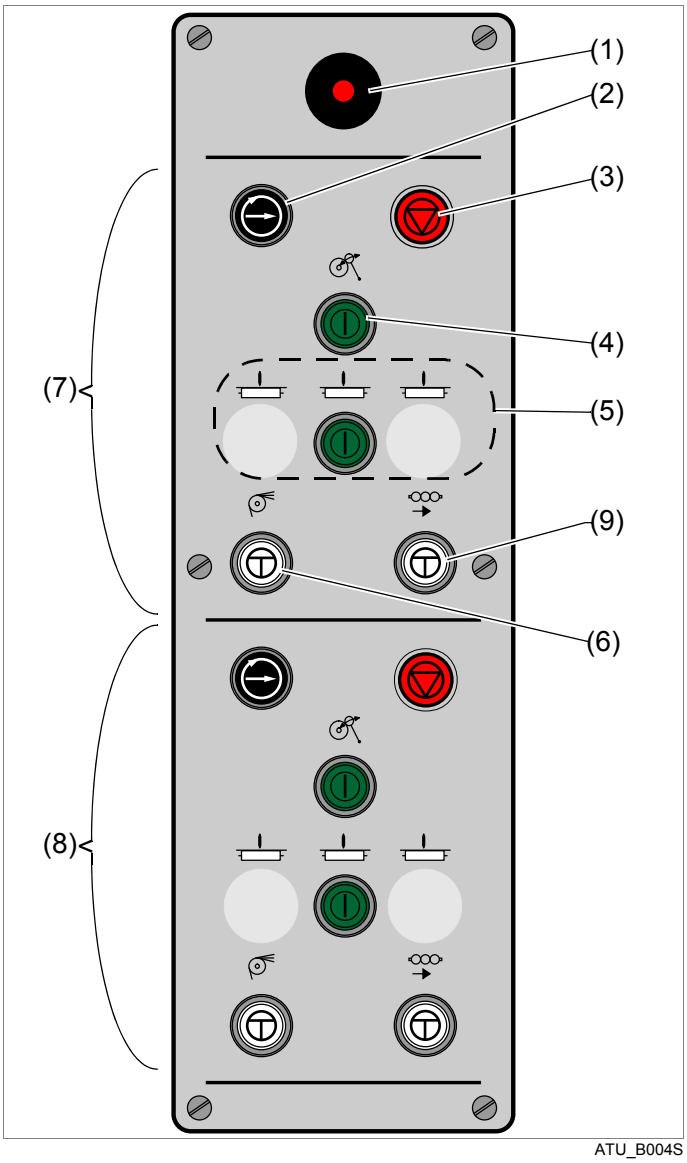

(1) *SAFE-STOP* pushbutton with signaling (lower angle-bar module)
(2) *FEED-IN* pushbutton
(3) *STOP* pushbutton with signaling
(4) *Contact pressure roller* pushbutton with signaling
(5) Pushbutton *Cutting disk* with signaling
(6) Pushbutton Web allocation
(7) Top angle-bar assembly
(8) Bottom angle-bar assembly
(9) Pushbutton *Send back feed-in chain*

2.2 Overview of pushbuttons and commands

Tab. 2 Buttons on angle-bar module control panels

Name	Symbol	Control location	Effect / display
Pushbutton *FEED-IN**	(black)	Control panels *run command*: • Angle-bar module (Fig. 2)	Is for feeding in the web and starting the machine at a basic speed of 5-10 m/min. The run command *FASTER* is only effective while the machine is run with *FEED-IN*. Stop with *STOP* or *SAFE-STOP*.
Pushbutton *STOP **	(red)	• All terminals • Angle-bar module (Fig. 2)	The machine is brought to rest along a ramp specified at commissioning.
Pushbutton *SAFE-STOP** with red signal lamp	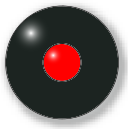 (black and yellow with red signal lamp)	Control panels *run command*: • Lower angle-bar module (Fig. 2)	With the *SAFE-STOP* command all drives of the corresponding safety circuit are brought to a standstill as quickly as possible and secured against restarting. Paper running drives of other safety circuits are likewise brought to a standstill if they are interconnected. Locally running drives that are not running paper of other safety circuits can continue to operate. The same takes place on the opening of an electrically monitored safety device. Enable: by pulling out **signal lamp** Reg. 2 Important for your safety
Pushbutton *EMERGENCY-STOP* (red on yellow background) with red signal lamp	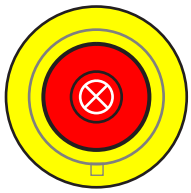	• Pillars • Lower angle-bar module (Fig. 2) • control cabinet	**Function:** With the *EMERGENCY-STOP* command all drives of the section as well as both neighboring sections are brought to a standstill as quickly as possible and secured against restarting. This is independent of the status of the allocation. Unlock by pulling. Afterward replace the two-part sealing cap over the pushbutton. **Signal lamp lights up continuously:** • if an *EMERGENCY-STOP* button is pressed at another point. **Signal lamp flashes (1 Hz):** • as long as this button is pressed.

Tab. 2 (Cont. Tab.) Buttons on angle-bar module control panels

Pushbutton *WEB ALLOCATION THROWON / THROWOFF* (white) with signal lamp	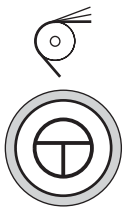	Angle-bar module (Fig. 2)	Allocate or de-allocate the web to the production. The web can be allocated to or de-allocated from the production only with the production at standstill. (intermittent) **Lights:** • when the web is allocated to the production. **Flashes:** • (1 Hz) when web belongs to production but is not yet allocated.
Pushbutton *DRIVE BACK FEED-IN CHAIN* (white) with signal lamp	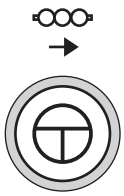	Angle-bar module (Fig. 2)	The feed-in chain is driven back into the chain buffer on the autopaster. **No light:** • Feed-in chain is in the autopaster **Flashes slowly:** • Web lead has to be detached **Flashes rapidly:** • Drive stations, switches, switch crossings disabled **Continuous light:** • Feed-in chain drives back
Pushbutton *REFERENCE* (white) with signal lamp		Angle-bar module (Fig. 1)	For positioning and referencing the register and angle bars. **No light:** • Referenced and positioned **Flashes:** • not referenced **Flashes rapidly:** • when drive malfunction **Continuous light:** • not positioned
Pushbutton *CUTTING DISK THROWON/THROWOFF* (green) with signal lamp	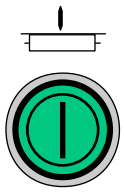	Angle-bar module (Fig. 2)	Switches cutting disks to *THROWON* or *THROWOFF* **Flashes:** • when there is a SETPOINT/ACTUAL difference (when the cutting disks are *THROWN OFF* but according to production should be *THROWN ON*). **Lights:** • when cutting disks are *ON*.
PRESSURE ROLLERS THROWON/THROWOFF (green) with signal lamp	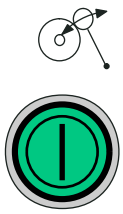	Angle-bar module (Fig. 2)	**Flashes:** • when there is a SETPOINT/ACTUAL difference (when the pressure rollers are *THROWN OFF* but according to production should be *THROWN ON*). **Lights:** • when pressure rollers are *ON*.

* Effects all drives of the interconnected group.

2.3 Design and operation of the terminals

2.3.1 Construction

Terminals of the type described here (PILZ type PMI v316 WIFAG) are installed on the printing couples, on the folder and on the autopaster. At each terminal, commands and setpoints can easily be entered and the operating states of the function groups can be checked.

Fig. 3 Terminal design

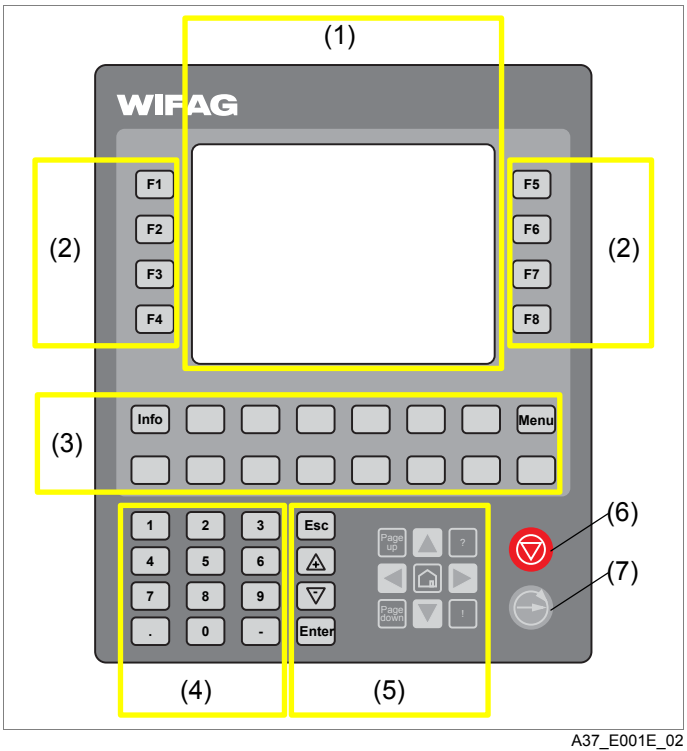

A37_E001E_02

(1) Display (complete LCD screen)
(2) Function keys F1 to F8
(3) Function keys for direct selection of the submenus
(4) Numeric keypad
(5) Control keys including cursor keys
(6) *STOP* pushbutton
(7) *FEED-IN* pushbutton

2.3.2 Functions of the pushbuttons

There are three kinds of pushbuttons on the terminal:

- Function keys
- Control keys
- Cursor keys

Each time a pushbutton is pressed a short acoustic signal sounds.
Some keys have a repeat function and produce repeated acoustic signals.

Function keys

The following distinction is made:

- Function keys with fixed assigned functions, known as *Hardkeys*
- Function keys with changing functions, known as *Softkeys*

- Hardkeys

Fig. 4 Hardkeys and their symbols

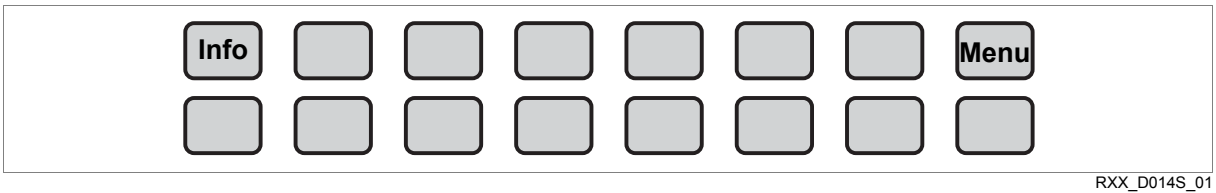

RXX_D014S_01

Tab. 3 Functions of hardkeys

Key	Functions
Info	Change to Information mask
Menu	Change to selection menu

- Softkeys

The other function keys directly below the display are for selecting the most important submenus. They vary according to subassembly.

The function keys directly next to the display (*F1* to *F8*) are assigned changing functions. Their current function is shown in the display.

Control keys

Tab. 4 Functions of the control keys

Key	Functions
Esc	Cancel changing a setpoint before the entry is finalized. Switch to the previous mask.
	If the cursor is on a setpoint, the value is increased stepwise (up to a max. limit).
	If the cursor is on a setpoint, the value is decreased stepwise (to a min. limit).
Enter	Conclude entry when changing setpoints. If a setpoint is outside the range limits, it is reset to the threshold value.
Page up	Scroll up a page at a time.
Page down	Scroll down a page at a time.
?	Get direct help (*[?]* -> *[FUNCTION KEY]*).
!	Access malfunction messages (press again -> return to menu).
	Connect to the Internet (press again -> return to menu).

Cursor keys

- **Indication of setpoints**
  – Further setpoints of the current mask are visible; these can be overwritten with the pushbuttons *[+]* or *[–]*.

- **Displaying message texts**

Tab. 5 Functions of the cursor keys

Key	Functions
Arrow up	select message above
Arrow down	select message below
Arrow left	select topmost message
Arrow right	select bottommost message

2.3.3 Terminal mask structure

Fig. 5 Terminal mask structure

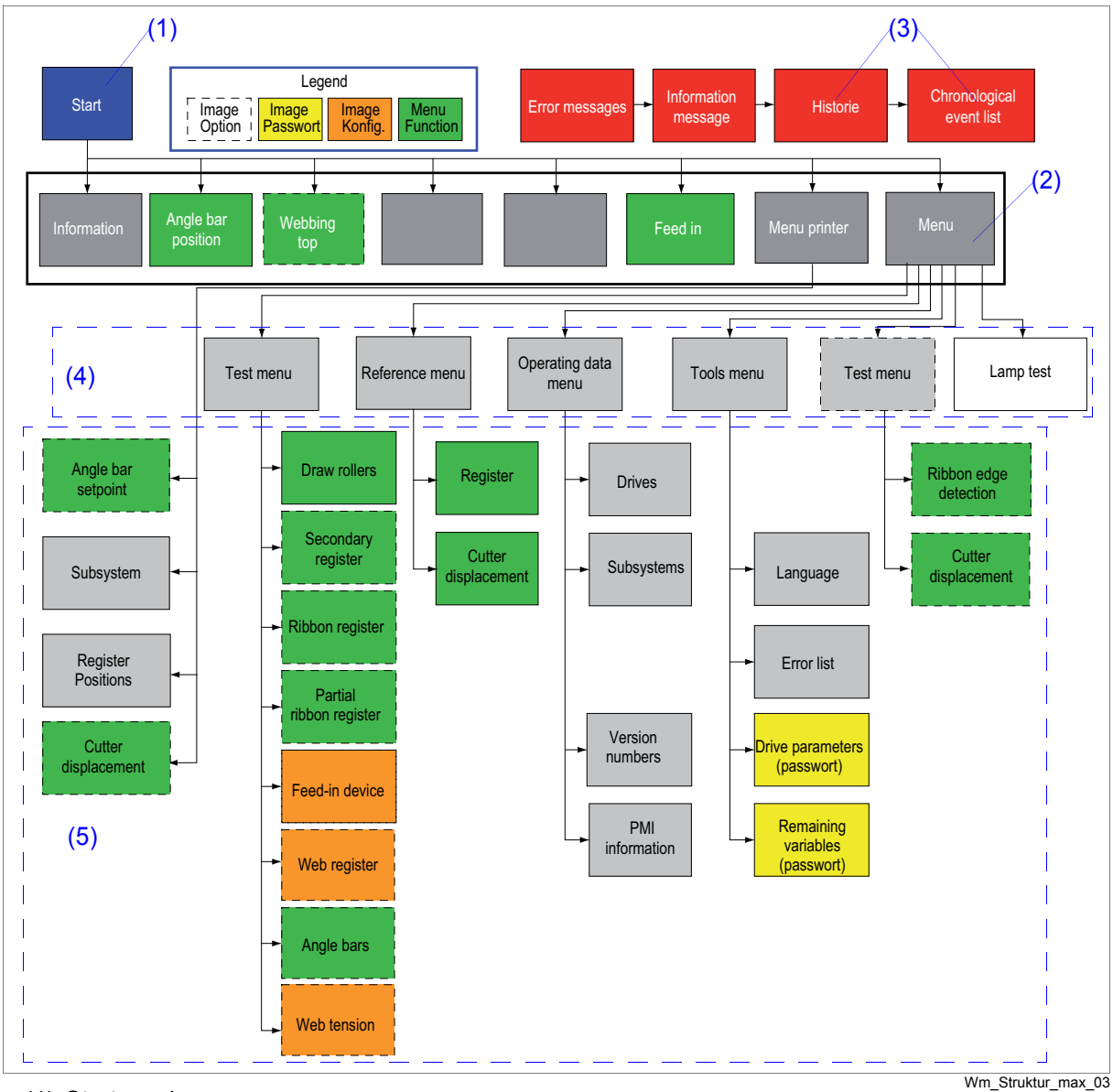

Wm_Struktur_max_03

(1) Start mask
(2) Direct selection masks
(3) Fault messages [!] Chronological list of events
(4) Menu groups [F1 - F8]
(5) Function masks [F1 - F8]

2.3.4 Terminal mask symbols

All symbols and their meanings are listed in the following table.

Tab. 6 Symbols, depending on the operating side

Symbol	Explanation of the symbols in the terminal masks
	Function mask [Information]
	Function mask [Position of angle bars]
	Function mask [Paper feed in (right)]
	Function mask [Feed in]
	Menu mask [Menu Printer]
	Menu mask [Menu]
	[Error messages] mask
	Main drive
	Drive Ready / Active
	Function is OFF / ON
	Symbol status: gray = ready; red = disabled; green = active; yellow = target/actual difference
	STOP
	FEED IN
	ACTUAL not or ACTUAL (✗ or ✓)
	Allocated / De-allocated

Tab. 6 (Cont. Tab.) Symbols, depending on the operating side

Symbol	Explanation of the symbols in the terminal masks
	Position of angle bars
	Setpoint entry window after keyboard entry *`Enable setpoint entry`* • Select with cursor keys **[**< / >**]** Selection left / right • Setpoint entry using numeric keypad or **`[+/-]`** keys • **`[ESC]`** Exit entry window. • **`[Enter]`** Confirm entry
	Setpoint entry window after keyboard entry *`Enable setpoint entry`* • Setpoint value range: `Minimum` / `Maximum` • Setpoint entry using numeric keypad or **`[+/-]`** keys • **`[ESC]`** Exit entry window. • **`[Enter]`** Confirm entry
	When the symbol appears on the screen: • Cursor keys **[**∧ | ∨**]** select angle-bar tower (autorun) upper / lower *Caution!* Always first select the desired angle-bar tower before operation!

2.3.5 Instructions function

With the key combination **[?] + [F1-F8]** you can call up the `Instructions` function to display a menu or mask explanation in a separate window (Fig. 6).

Fig. 6 Mask design of an instructions window

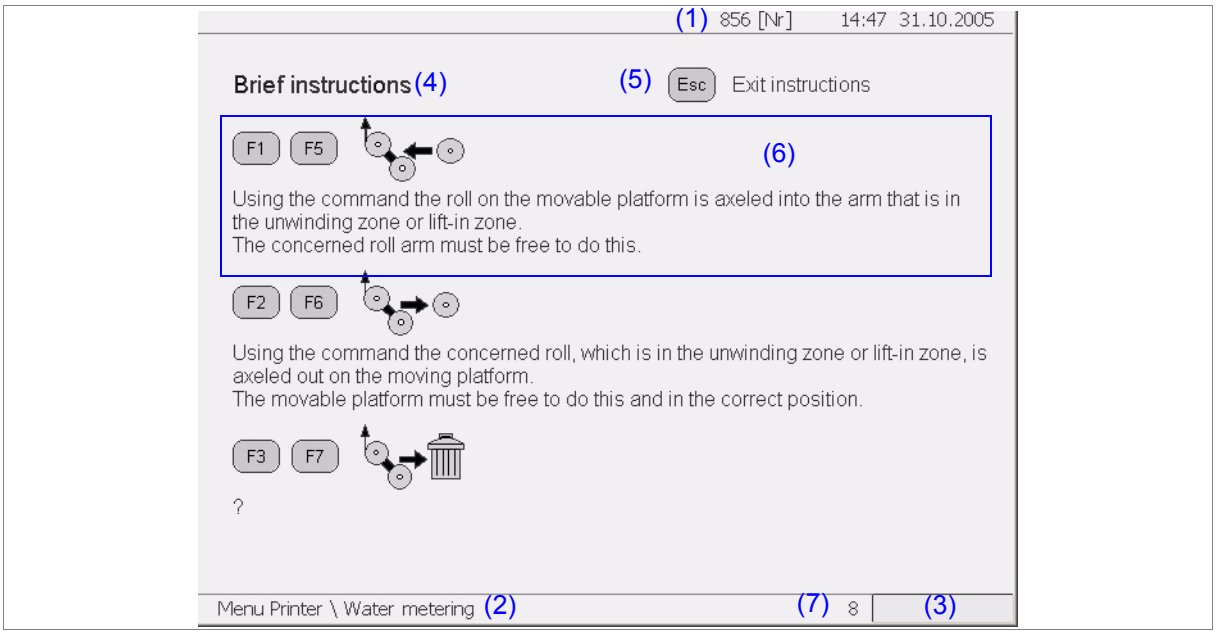

Br_Anl_072

(1) Current mask no. / time and date
(2) Mask name
(3) Message: `Fault/Warning/Event status`
(4) Information text
(5) [ESC] function key to return to previous mask
(6) Instructions / explanation
(7) Number of fault messages

2.3.6 Help text function

If it is not permitted to carry out a command in a particular state, a window with help text appears when you press the key (Fig. 7).

Fig. 7 Example of a help text

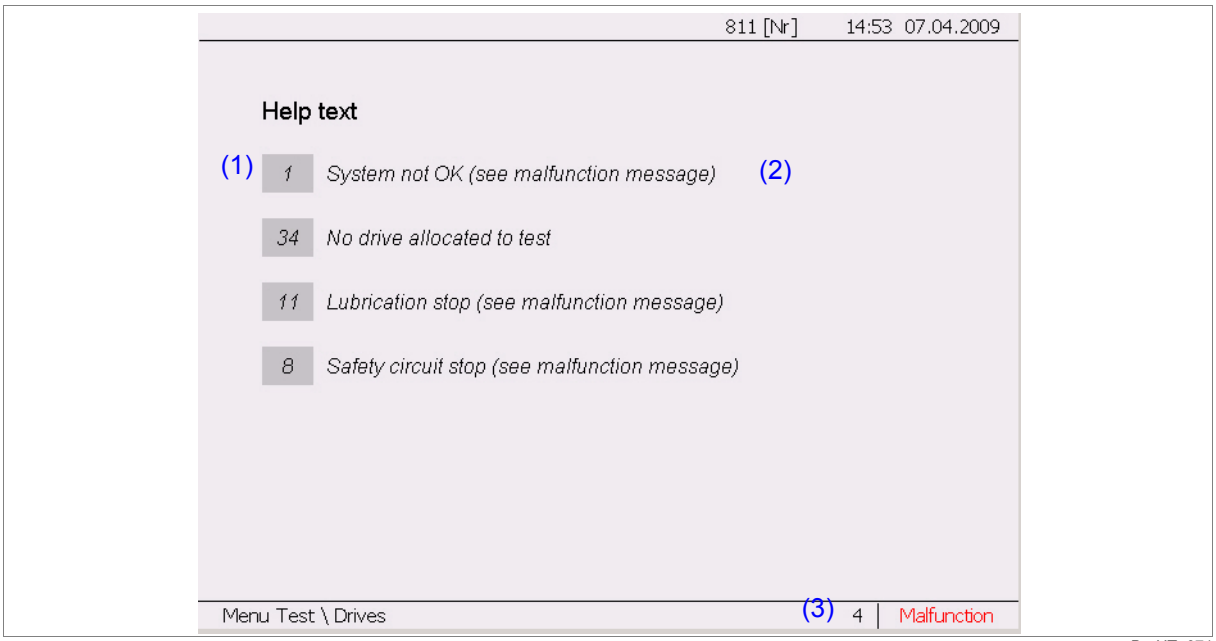

Br_HT_071

(1) Help text no.
(2) Help text
(3) Number of fault messages

2.4 Terminal masks

Contents

This chapter contains the following terminal masks:

• Start 17
• Information 18
• Position of angle bars 19
• Paper feed in (right) 20
• Feed in 21
• Menu Printer 22
• Menu Printer \ Subsystems 23
• Menu Printer \ Register positions 24
• Menu 25
• Menu Test 26
• Menu Test \ Draw rollers 27
• Menu Test \ Ribbon register 28
• Menu Test \ Feed-in device 29
• Menu Test \ Angle bars 30
• Menu Reference 31
• Menu Reference \ Register 32
• Menu Operating data 33
• Operating data / Drives menu 34
• Menu Operating data \ Subsystems 35
• Menu Operating data \ Version numbers 36
• Operating data \ PMI information menu 37
• Menu Tools 38
• Menu Tools \ Languages 1 39
• Menu Tools \ Languages 2 40
• Menu Tools \ Error list 41
• Menu Tools \ Drive parameters 42
• Menu Tools \ Remaining variable 43
• Error messages 44
• Information message 45
• Fault messages\history 46
• Fault messages \ ChronologicalEventList 47

2.4.1 Start

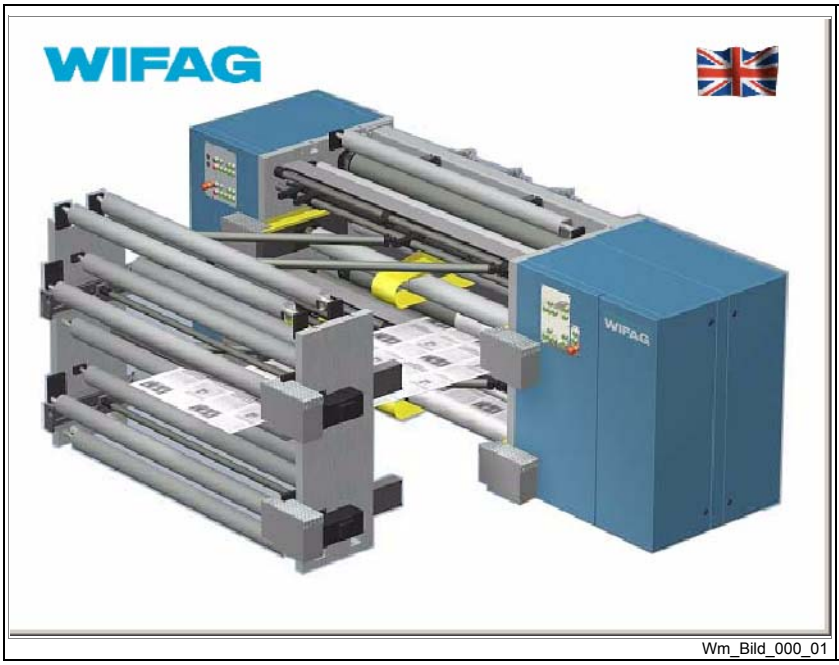

Wm_Bild_000_01

Note

Press any key to continue.

2.4.2 Information

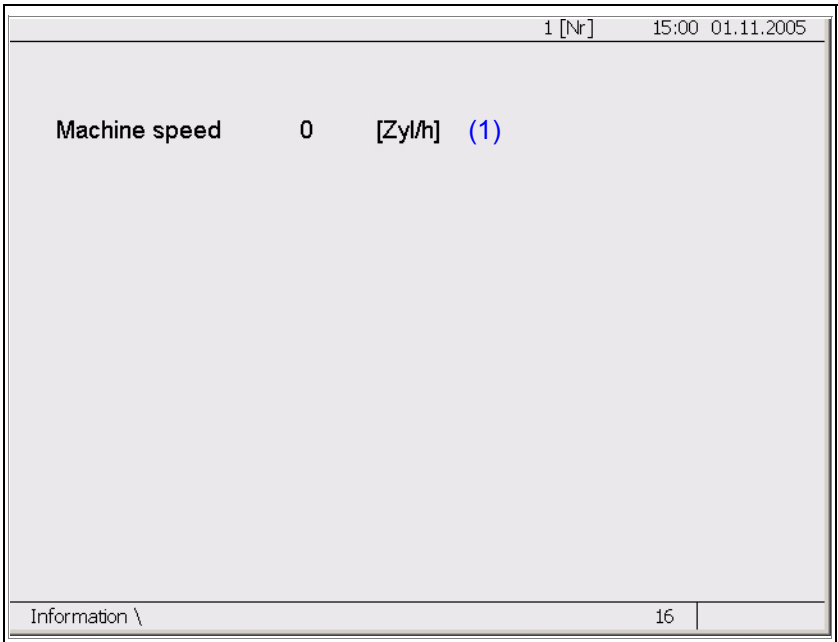

Wm_Bild_001_01

Variable	Meaning
(1) 0....42000 [cyl.rev/h]	Production speed is:

2.4.3 Position of angle bars

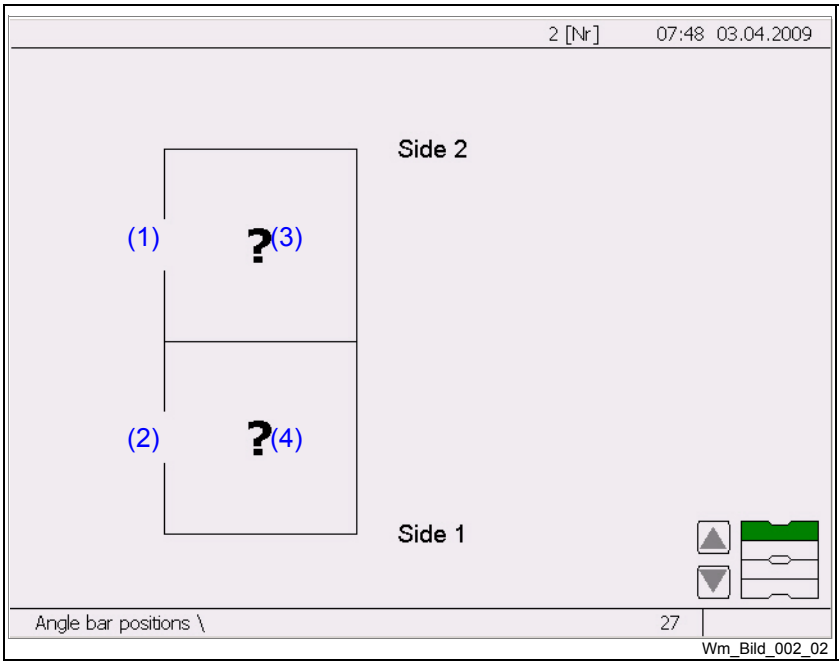

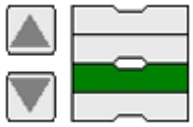

b Cursor keys [∧∨]
angle-bar assembly 1-4 selection

Variable		Meaning
(1)	**Angle bar 1 / 2**	Position of angle bars, assembly X SII
(2)	**Angle bar 1 / 2**	Position of angle bars, assembly X SI
(3)		Position of angle bars, assembly X SII
(4)		Position of angle bars, assembly X SI

2.4.4 Paper feed in (right)

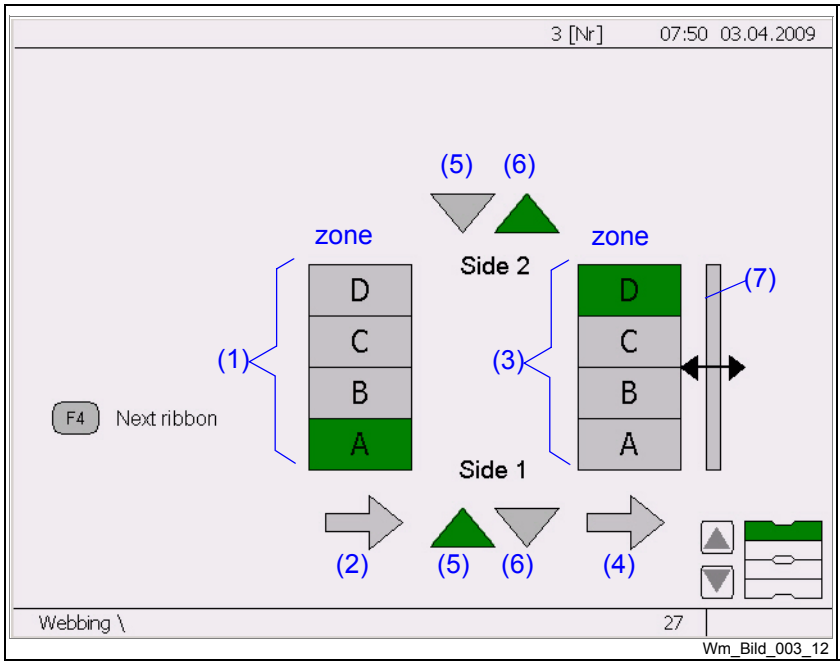

b Cursor keys [∧∨]
angle-bar assembly 1-4 selection

Function key	Function
F4 Next ribbon	Selection of next webbing ribbon left
F8 Next ribbon	Selection of next webbing ribbon right

Variable	Meaning
(1)	Paper assignment in the angle-bar module input zone A / B C / D: not assigned / assigned
(2)	Angle-bar module input web running direction
(3)	Paper assignment in the angle-bar module output zone A / B C / D: not assigned / assigned
(4)	Angle-bar module out web running direction
(5)	Right-angle web lead roller S1/S2 active: bay window on
(6)	Right-angle web lead roller S1/S2 active: bay window off
(7)	Ribbon is not threaded / via secondary register

Note

Example shows web threading in production:

=> Turning of *Zone A* input to *Zone D* output (webbing left).

Tab. 7 Standard turning options

Input	Output	Input	Output
A	B / C	D	B / C
B	A / C / D	OFF	CD
C	A / B / D	CD	OFF

2.4.5 Feed in

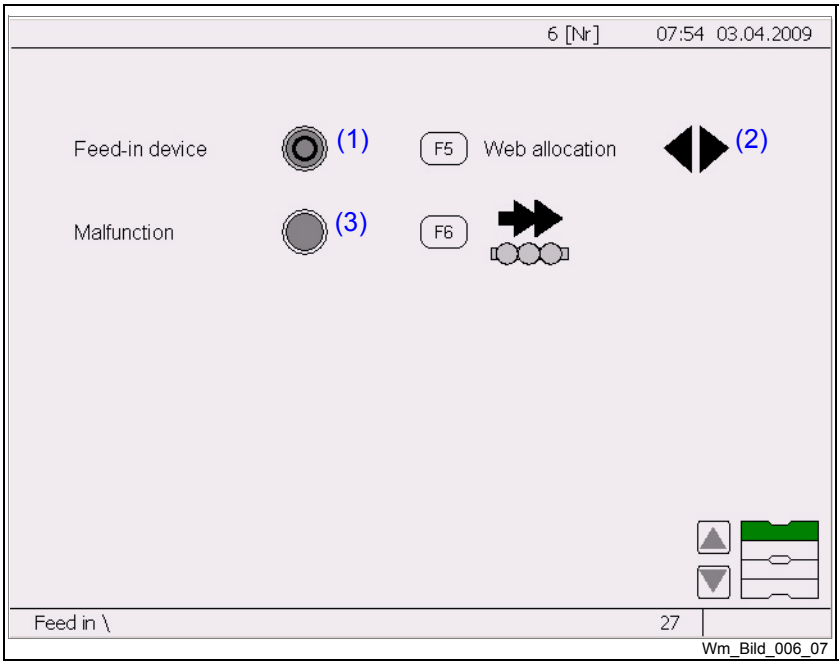

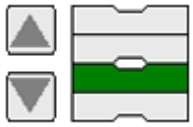

b Cursor keys [∧∨]
angle-bar assembly 1-4 selection

Function key	Function
F5 Web allocation	angle-bar assembly 1-4 web allocation
F6 Feed-in chain	Request feed-in chain

Variable	Meaning
(1)	Feed-in device is OFF / ON
(2)	Web is: Allocated / De-allocated
(3)	Status of feed-in device is: Ready / Disabled

2.4.6 Menu Printer

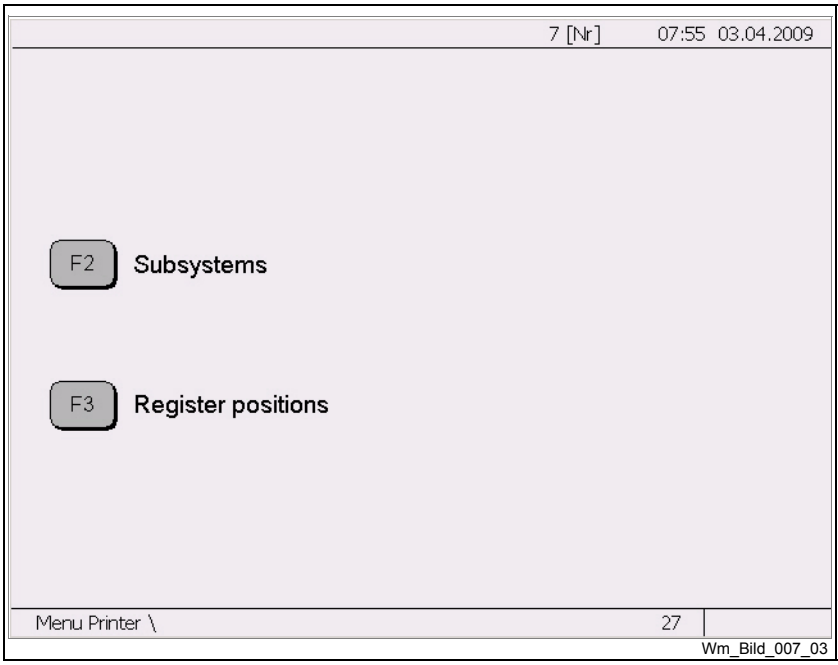

Wm_Bild_007_03

Function key	Function
F2 Subsystems	Call up menu Subsystems
F3 Register positions	Call up Register positions mask

2.4.7 Menu Printer \ Subsystems

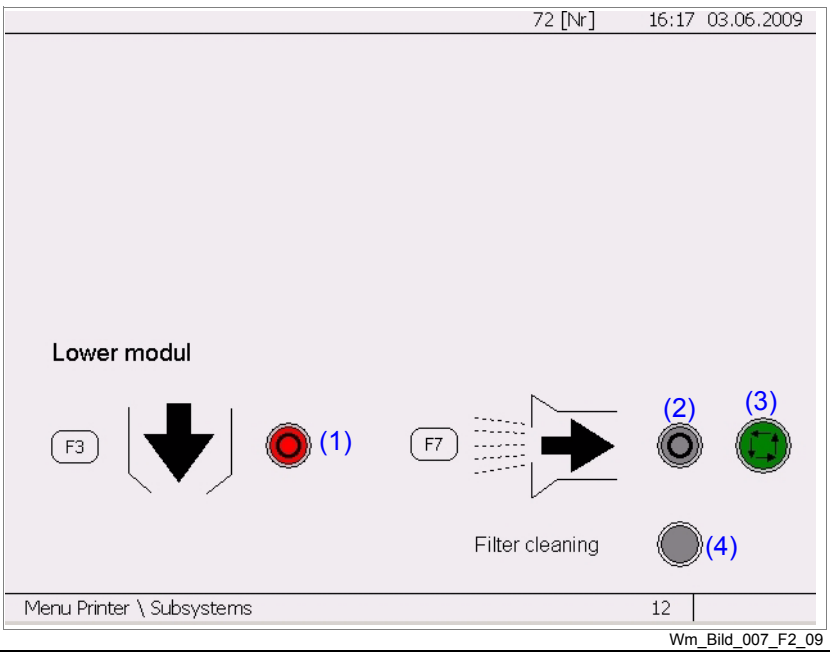

Wm_Bild_007_F2_09

Function key		Function
F3	duct fan compressor	Switch duct compressor ON / OFF (WE1&2)
F7	Paper dust extraction	Switch paper dust extractor ON / OFF (WE1&2)

Variable		Meaning
(1)	/	Duct compressor is: OFF / ON
(2)	/	Paper dust extractor is OFF / ON
(3)	/	Operating mode is: Manual / Automatic
(4)	/	Filter cleaning status is: inactive / active

2.4.8 Menu Printer \ Register positions

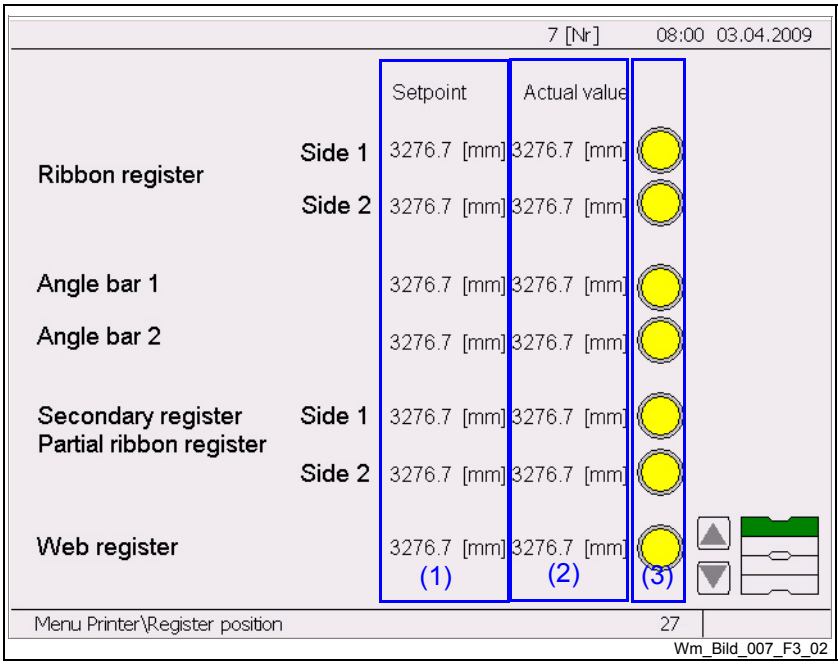

b Cursor keys [∧∨]
angle-bar assembly 1-4 selection

Variable		Meaning
(1)	Setpoint	Setpoint specification for register
(2)	Actual value	Actual value position for register
(3)	/	Refister is: setpoint-actual difference / in position

2.4.9 Menu

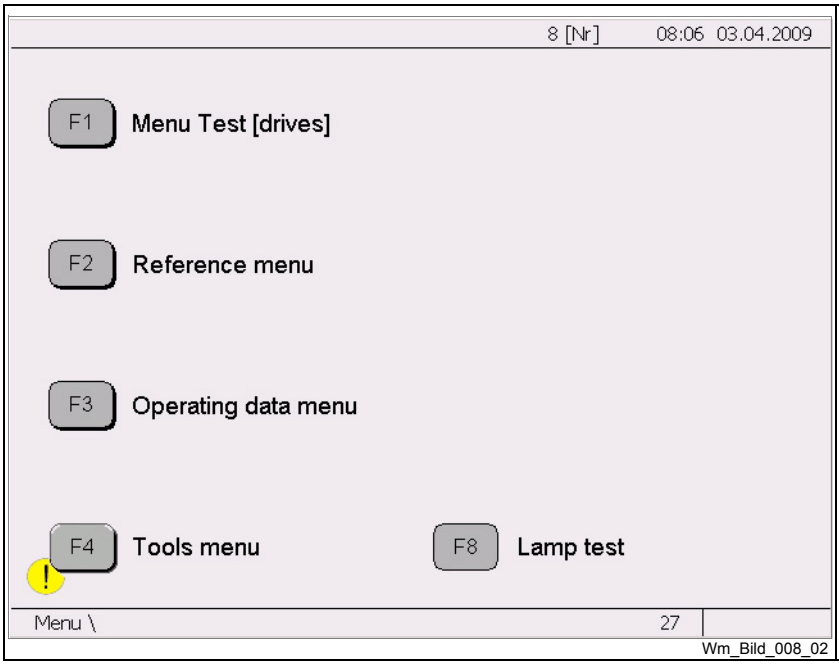

Function key	Function
F1 Menu Test manual	Call up menu Test
F2 Menu Reference	Call up menu Reference
F3 Menu Operating data	Call up menu Operating data
F4 Menu Tools	Call up menu Tools
F8 Lamp test	Test lamps

Variable	Meaning
(1) !	Important error message from PMI display in mask Menu Tools \ Error list

2.4.10 Menu Test

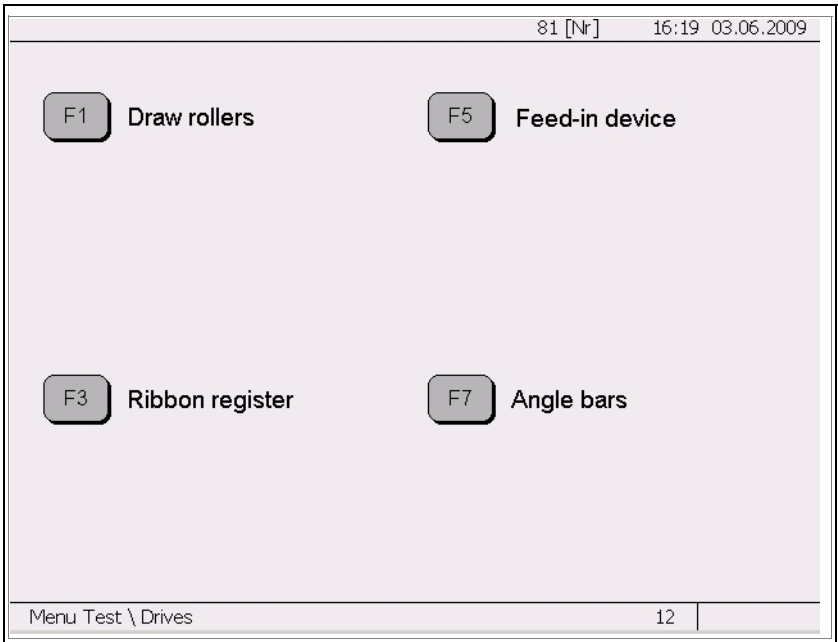

WM_Bild_081_04

Function key	Function
F1 Draw rollers	Call up Draw rollers mask
F3 Ribbon register	Call up Ribbon register mask
F5 Feed-in device	Call up menu Feed-in device
F7 Angle bars	Call up Angle bars mask

2.4.11 Menu Test \ Draw rollers

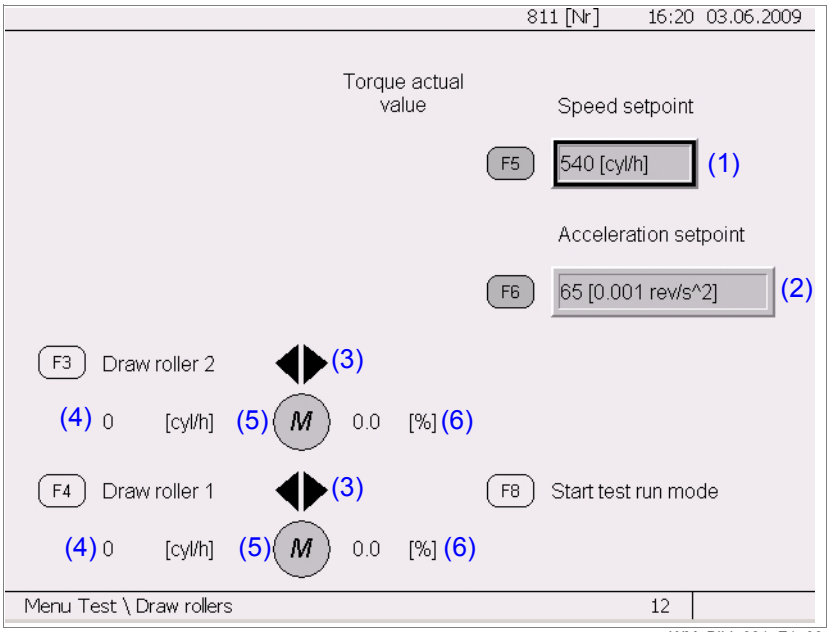

WM_Bild_081_F1_03

a Enter setpoint in the indicated range:

- Maximum & minimum value defined in window for each entry
- Entry using numeric keypad or *[+/-]* keys
- *[ESC]* Exit entry window.
- *[ENTER]* Confirm entry

Function key		Function
F3	Allocation test	Draw roller WE2 for allocate/de-allocate test (alternating)
F4	Allocation test	Draw roller WE1 for allocate/de-allocate test (alternating)
F5	Speed setpoint	Speed setpoint specification for allocated drives
F6	Acceleration setpoint	Acceleration setpoint specification for allocated drives
F8	Start test run mode	Start test run mode for allocated drives

Variable		Meaning
(1)	0…42000 [cyl/h]	Rpm setpoint test for allocated drives
(2)	0...1200 [0.001 rev/s^2]	Acceleration setpoint for allocated drives
(3)	◀▶/◀▶	Draw roller drive X is: Allocated / De-allocated
(4)	0…42000 [cyl/h]	Rpm actual value for draw roller drive X
(5)	M / M	Draw roller drive X is: ready / active
(6)	-100.0…200.0 [%]	Torque actual value for draw roller drive X drive

*1) Sequence in accordance with Chapt. 11.1 Draw roller tests in Reg. 4 Operation

2.4.12 Menu Test \ Ribbon register

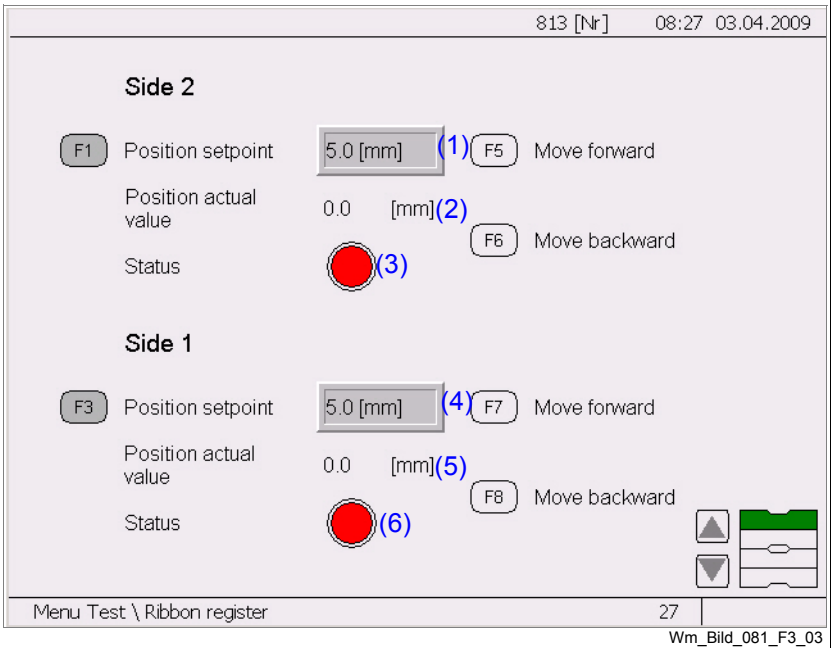

Wm_Bild_081_F3_03

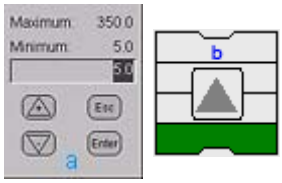

a Enter setpoint in the indicated range:
- Maximum & minimum value defined in window for each entry
- Entry using numeric keypad or *[+/-]* keys
- *[ESC]* Exit entry window.
- *[ENTER]* Confirm entry

b Cursor keys [∧∨] angle-bar assembly 1-4 selection

Function key		Function
F1	Setpoint position	Setpoint entry for displacement of upper ribbon register S2
F3	Setpoint position	Setpoint entry for displacement of upper ribbon register S1
F5	Inch forward	Displace web path in direction longer (stepwise)
F6	Inch backward	Displace web path in direction shorter (stepwise)
F7	Inch forward	Displace web path in direction longer (stepwise)
F8	Inch backward	Displace web path in direction shorter (stepwise)

Variable		Meaning
(1)	5.0…350.0 [mm]	Test setpoint input
(2)	0.0…350.0 [mm]	Actual value position of ribbon register S2
(3)	/ / /	Status of ribbon register S2 is: ready / disabled / active / setpoint-actual difference
(4)	5.0…350.0 [mm]	Test setpoint input
(5)	0.0…350.0 [mm]	Actual value position of ribbon register S1
(6)	/ / /	Status of ribbon register S1 is: Ready / Disabled / Active / Set-point-actual difference

2.4.13 Menu Test \ Feed-in device

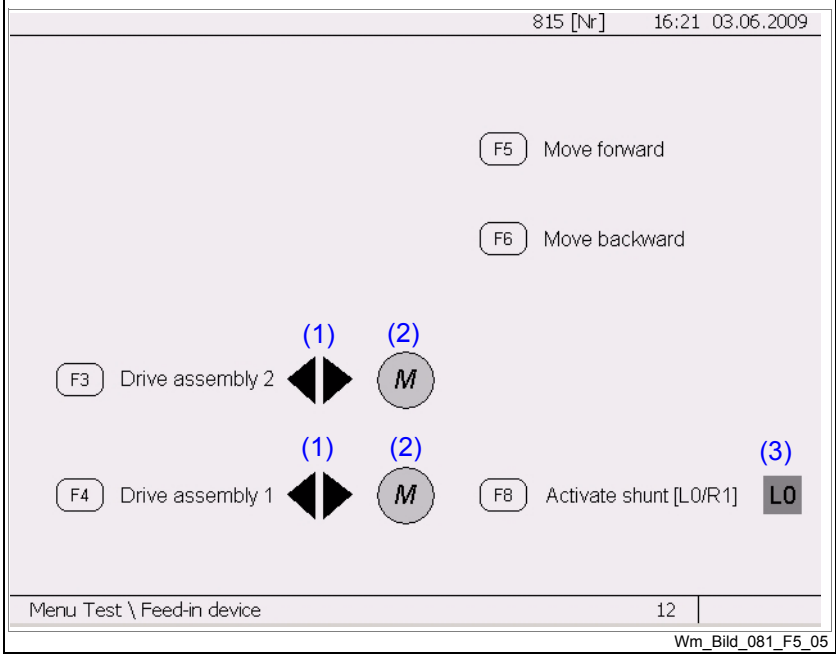

Wm_Bild_081_F5_05

Function key		Function
F3	Assembly 2 drive	Allocate / de-allocate drive for feed-in device simply 2 for test
F4	Assembly 1 drive	Allocate / de-allocate drive for feed-in device simply 1 for test
F5	Inch forward	Inch forward allocated feed-in chain
F6	Inch backward	Inch back allocated feed-in chain
F8	Activate switch	Change switch position

Variable		Meaning
(1)	▶◀/◀▶	Feed-in device drive X is: Allocated / De-allocated
(2)	M / M	Feed-in device drive X is: ready / active
(1)	L0/R01	Switch is in position: L0 or R01

2.4.14 Menu Test \ Angle bars

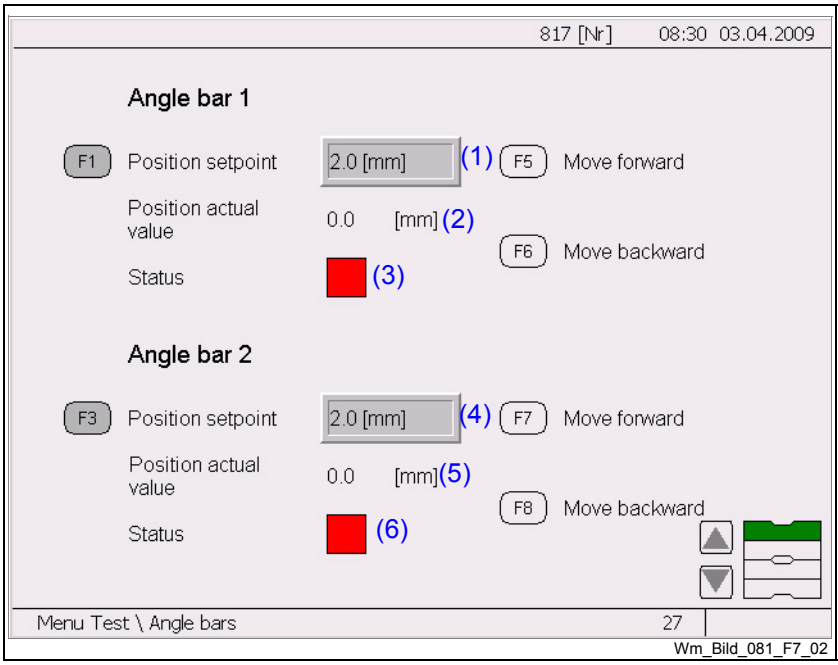

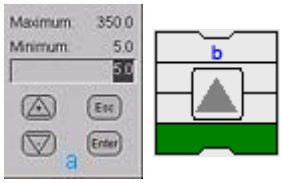

a Enter setpoint in the indicated range:
- Maximum & minimum value defined in window for each Entry
- Entry using numeric keypad or *[+/-]* keys
- *[ESC]* Exit entry window.
- *[ENTER]* Confirm entry

b Cursor keys [∧∨] angle-bar assembly 1-4 selection

Function key		Function
F1	Setpoint position	Setpoint entry for displacement of upper angle bar 1
F3	Setpoint position	Setpoint entry for displacement of upper angle bar 2
F5	Inch forward	Displace web path in direction longer (stepwise)
F6	Inch backward	Displace web path in direction shorter (stepwise)
F7	Inch forward	Displace web path in direction longer (stepwise)
F8	Inch backward	Displace web path in direction shorter (stepwise)

Variable		Meaning
(1)	2.0…735.0 [mm]	Test setpoint input
(2)	0.0…735.0 [mm]	Actual value position of angle bar 1
(3)	/ / /	Status of angle bar 1 is: ready / disabled / active / setpoint-actual difference
(4)	2.0…735.0 [mm]	Test setpoint input
(5)	0.0…735.0 [mm]	Actual value position of angle bar 2
(6)	/ / /	Status of angle bar 2 is: ready / disabled / active / setpoint-actual difference

2.4.15 Menu Reference

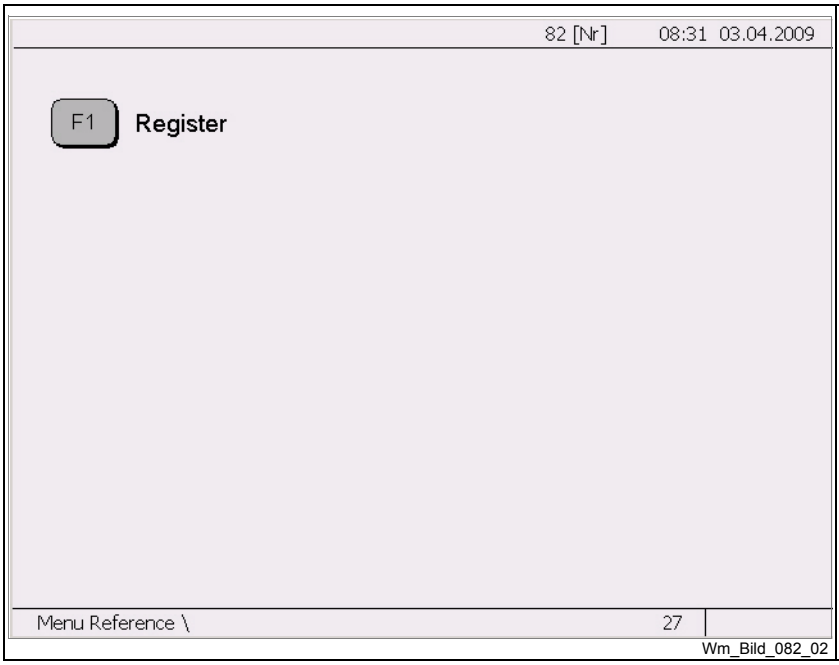

Wm_Bild_082_02

Function key	Function
F1 Index	Call up Register referencing mask

2.4.16 Menu Reference \ Register

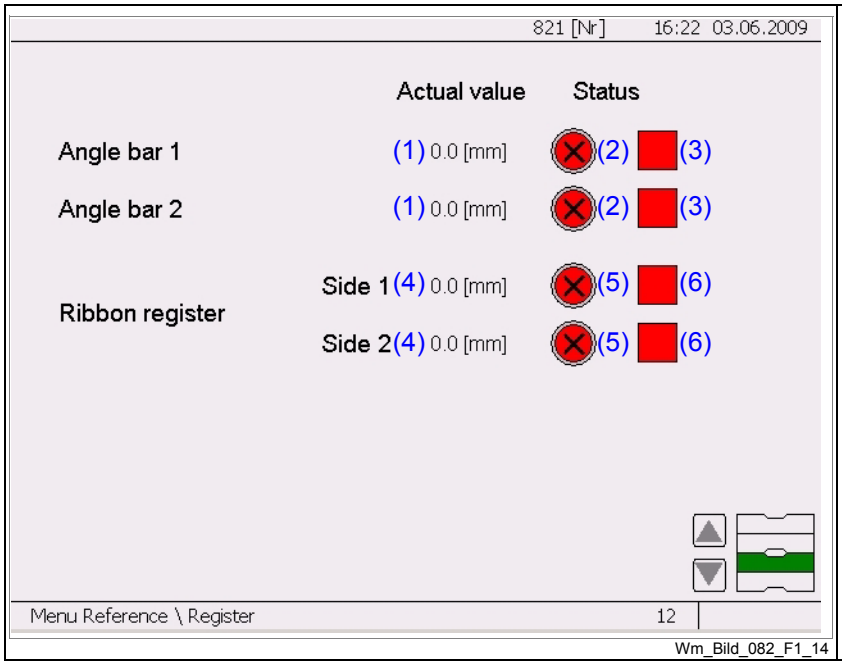

b Cursor keys [∧∨]
angle-bar assembly 1-4 selection

Variable		Meaning
(1)	2.0…735.0 [mm]	Angle bars actual position
(2)	/	Angle bars are: not referenced / referenced *1)
(3)	/ / /	Status of angle bars is: ready / disabled / active / setpoint-actual difference
(4)	5.0…350.0 [mm]	Ribbon register actual position
(5)	/	Ribbon register is: not referenced / referenced *1)
(6)	/ / /	Status of ribbon register is: ready / disabled / active / setpoint-actual difference

*1) Sequence in accordance with Chapt. 10.2 Referencing / positioning in Reg. 4 Operation

Note

This mask shows only states; operation as described in Chapt. 2.1 Angel-bar module control panel and Chapt. 2.3.2 Functions of the pushbuttons.

2.4.17 Menu Operating data

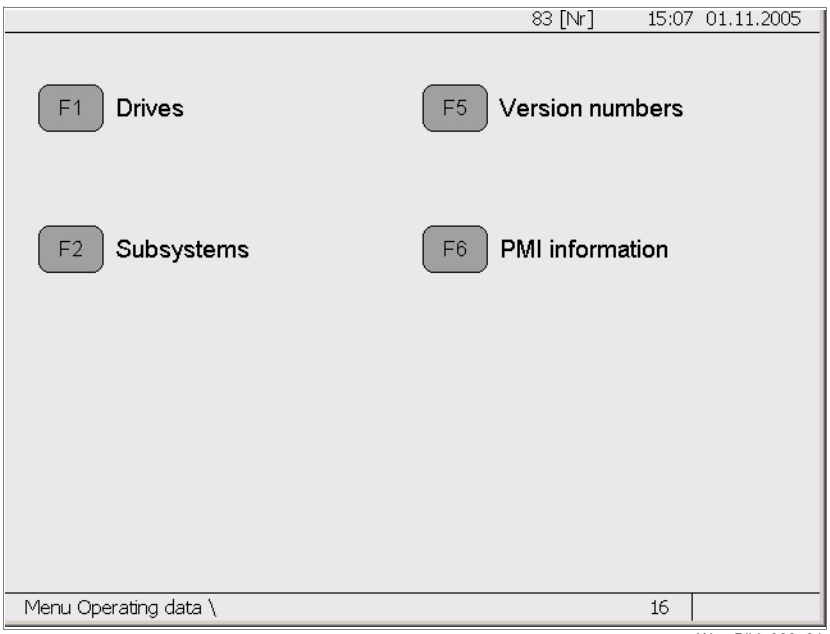

Wm_Bild_083_01

Function key	Function
F1 Drives	Call up menu Drive operating hours
F2 Subsystems	Call up menu Subsystems operating hours
F5 Version numbers	Call up menu Version numbers
F6 PMI information	Call up menu PMI information

2.4.18 Operating data / Drives menu

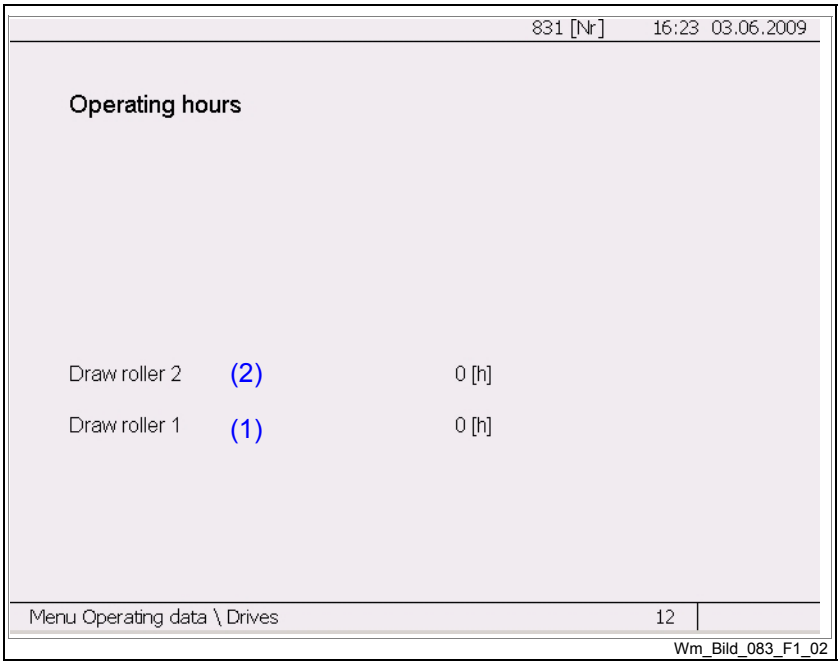

Wm_Bild_083_F1_02

Variable		Meaning
(1)	0…4294967295 [h]	Draw rollers 1 hours of operation
(2)	0…4294967295 [h]	Draw rollers 2 hours of operation

2.4.19 Menu Operating data \ Subsystems

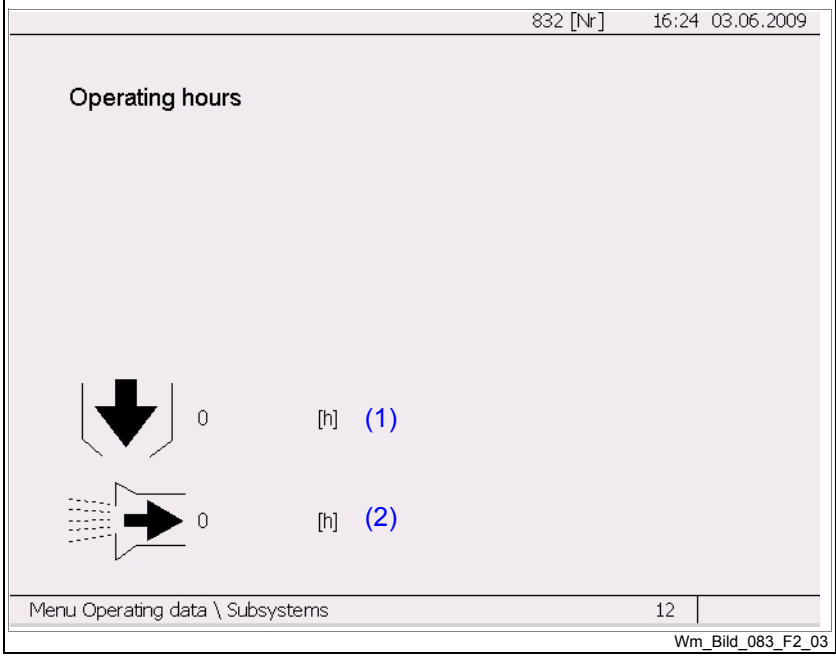

Variable		Meaning
(1)	0…4294967295 [h]	Operating hours drive duct compressor
(2)	0…4294967295 [h]	Paper dust extraction drive operating hours

2.4.20 Menu Operating data \ Version numbers

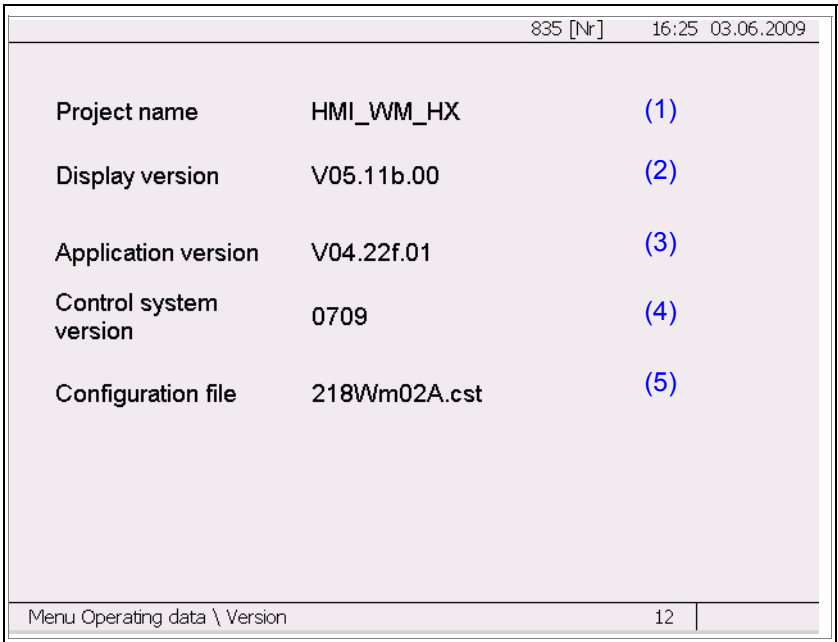

Wm_Bild_083_F5_18

Variable		Meaning
(1)	HMI_WM_HX	Module project name
(2)	V05.11x.00	Version numbers display
(3)	V04.22x.01	System software version numbers
(4)	0709	System version numbers
(5)	xxxWm02x.cst	Module configuration file

2.4.21 Operating data \ PMI information menu

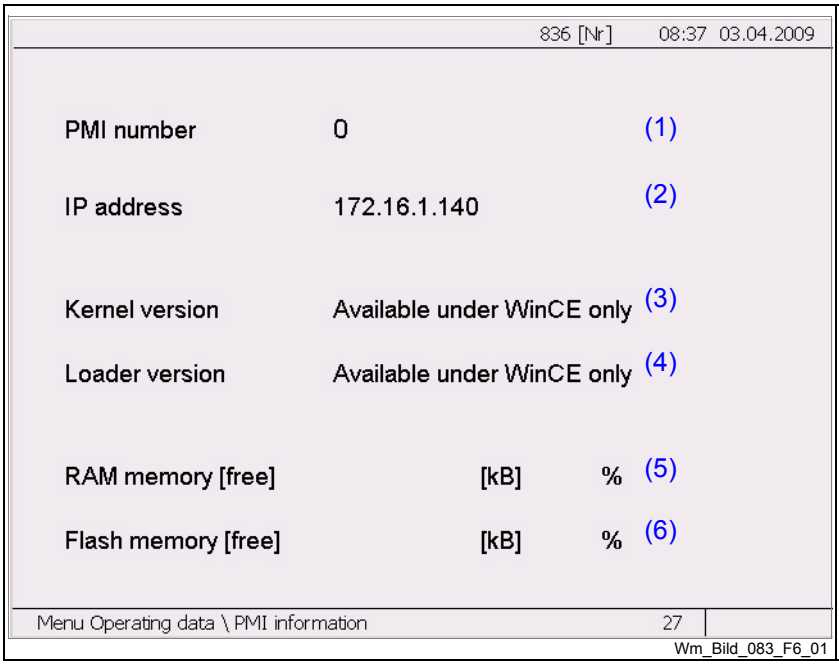

Variable		Meaning
(1)	0…999	PMI number
(2)	172.xx.xx.xxx	IP address PMI
(3)	xxx	Kernel version numbers
(4)	xxx	Loader version numbers
(5)	0…4294967295 [KB] 0…100 [%]	Free RAM memory in KB and percentage
(6)	0…4294967295 [KB] 0…100 [%]	Free Flash memory in KB and percentage

2.4.22 Menu Tools

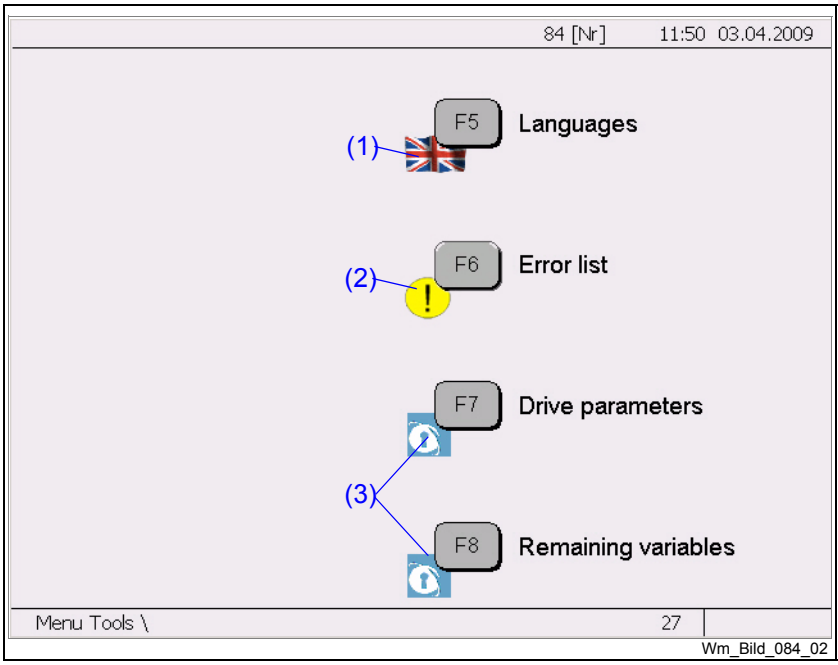

Wm_Bild_084_02

- Protected masks with password entry only for authorized users!
- User: = ???
- Password: = ???
- For further information: info@wifag.ch

Function key		Function
F5	Language	Call up menu Language selection
F6	Error list	Call up menu Error list
F7	Drive parameters	Call up menu Parameters [password]
F8	Remaining variables	Call up mask Remaining variables [password]

Variable		Meaning
(1)		Country flag (current language)
(2)		Important error message from PMI display (more information in Menu Tools \ Error list)
(3)		Mask with password

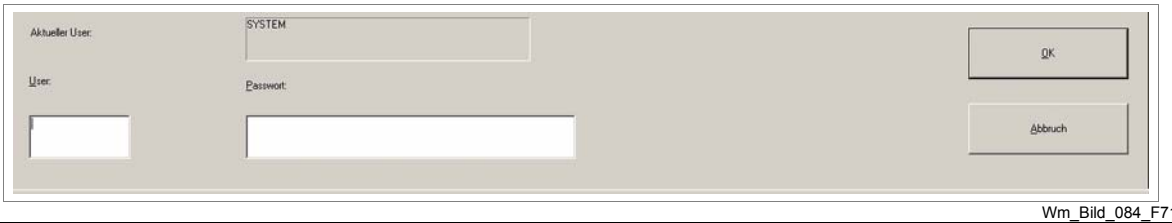

Wm_Bild_084_F71

2.4.23 Menu Tools \ Languages 1

Wm_Bild_084_F5_01

Function key	Function
F1 German	Terminal masks in German
F2 English	Terminal masks in English
F3 French	Terminal masks in French
F4 Italian	Terminal masks in Italian
F5 Finnish	Terminal masks in Finnish
F6 Spanish	Terminal masks in Spanish
F7 Hungarian	Terminal masks in Hungarian
F8 Other languages	Call up menu Other languages

2.4.24 Menu Tools \ Languages 2

Wm_Bild_084_F5_F8

Function key	Function
F1 German	Terminal masks in German
F2 English	Terminal masks in English
F3 French	Terminal masks in French
F4 Italian	Terminal masks in Italian
F5 Finnish	Terminal masks in Finnish
F6 Romanian	Terminal masks in Romanian

2.4.25 Menu Tools \ Error list

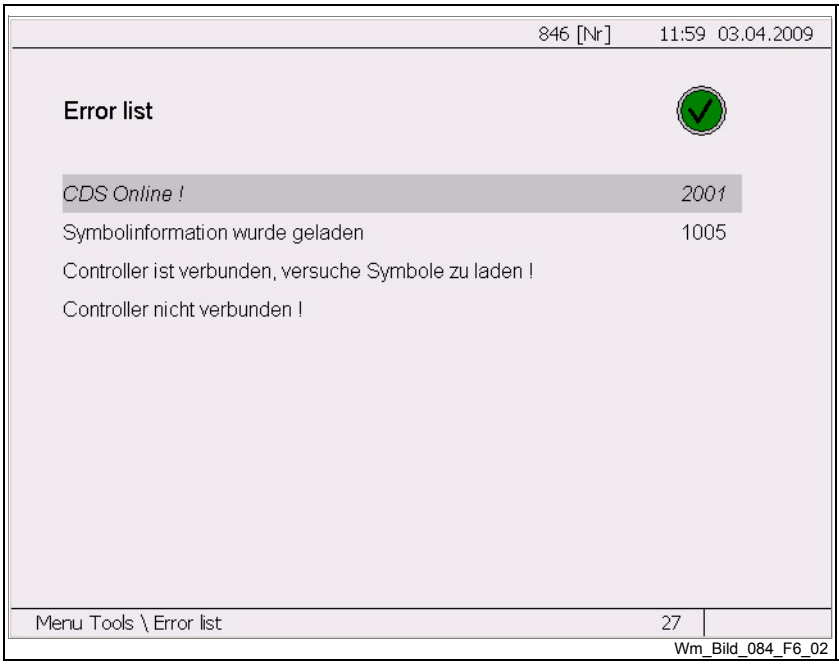

Wm_Bild_084_F6_02

Note

Only messages from PMI display are listed here.

Variable	Meaning
(1)	Error in error list is: Error display / no error

2.4.26 Menu Tools \ Drive parameters

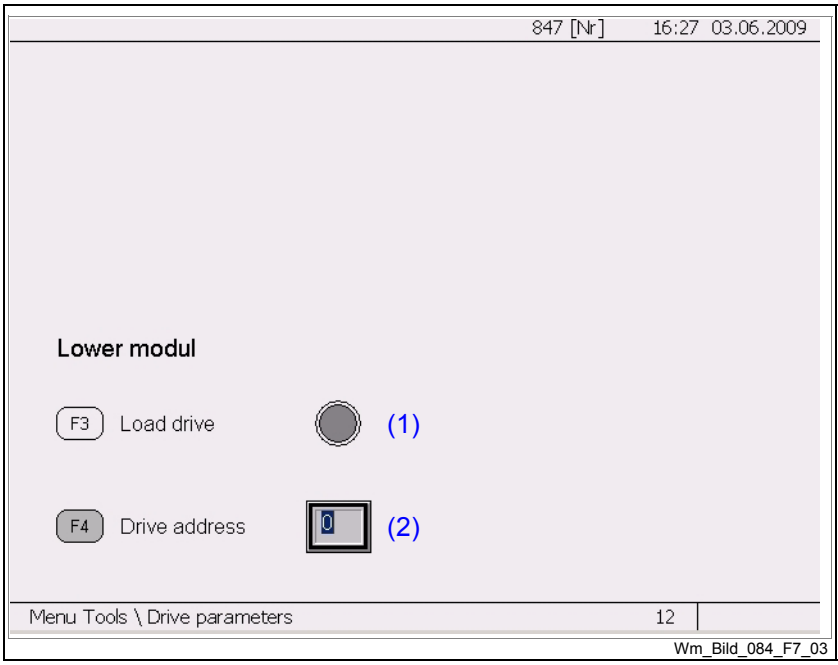

a Enter setpoint in the indicated range:
- Entry using numeric keypad or *[+/-]* keys
- *[ESC]* Exit entry window.
- *[ENTER]* Confirm entry

Function key	Function
F3 Load drives	Start loading drive, lower assembly
F4 Drive address	Enter drive address, lower assembly

Variable		Meaning
(1)	/ / /	Load drive is: Disabled / Ready / Loaded / Active
(2)	0…99	Drive address (decimal)

Note

Drive addresses can be found in *WIFAG electrical circuit diagrams* W!
For a KWD or KWF device both drives are re-loaded!
Loading takes place automatically by entering just one of the two addresses on the device!

2.4.27 Menu Tools \ Remaining variable

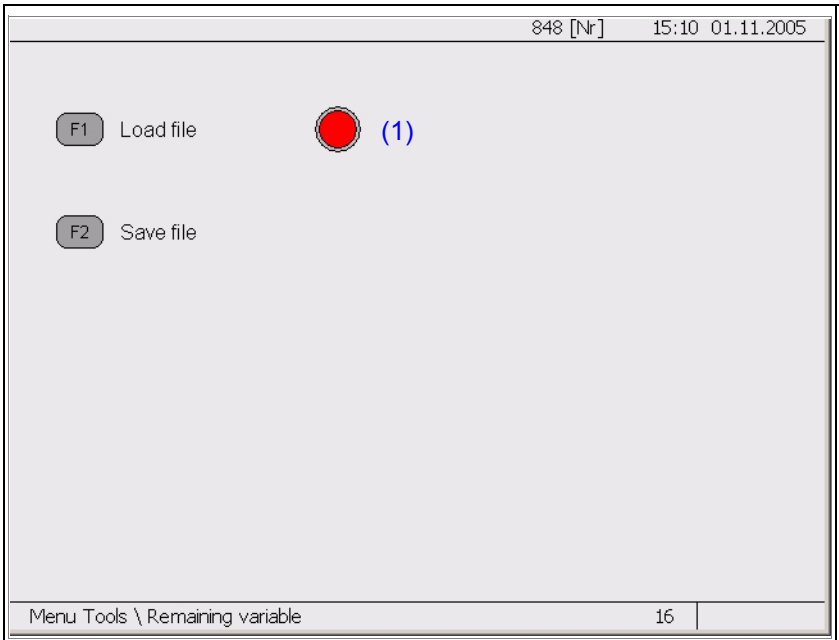

Wm_Bild_084_F8

Function key	Function
F1 Load file	Start load file
F2 Save file	Save file

Variable	Meaning
(1)	Load file is: Disabled / Ready / Loaded / Active

2.4.28 Error messages

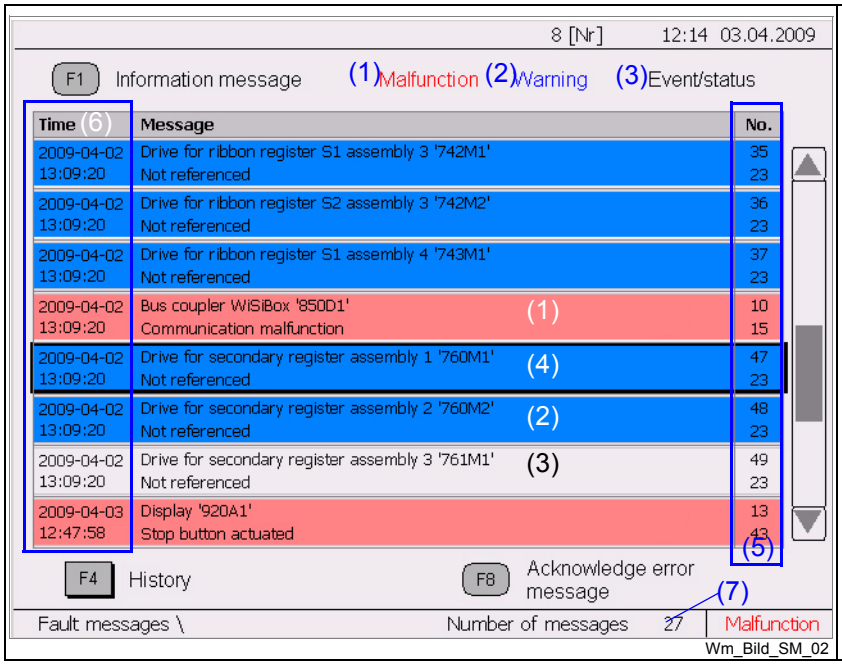

Function key		Function
Esc	ESC *	Exit mask, return to previous mask
F1	Information message	Display explanation for fault message
F4	History	Call up mask History (event list)
F8	Acknowledge	Acknowledge all fault messages

Variable		Meaning
(1)	**Malfunction**	Cause of fault / stop (red)
(2)	**Warning**	Only warning, irrelevant fault (blue)
(3)	**Event/status**	Event or message status no fault (gray)
(4)		Selected message (color with black border) *1)
(5)	XXX XXX	• Message No. = location • Message No. = text
(6)	2007.10.11 21:12:21	• Time = date • Time = in hours, minutes and seconds
(7)	XXXX	Number of messages

*1) Select page with `[Page UP / Page Down]` keys and lines with cursor keys (arrow keys). Then use the `[F1]` key to call up the information message for the selected fault message.

2.4.29 Information message

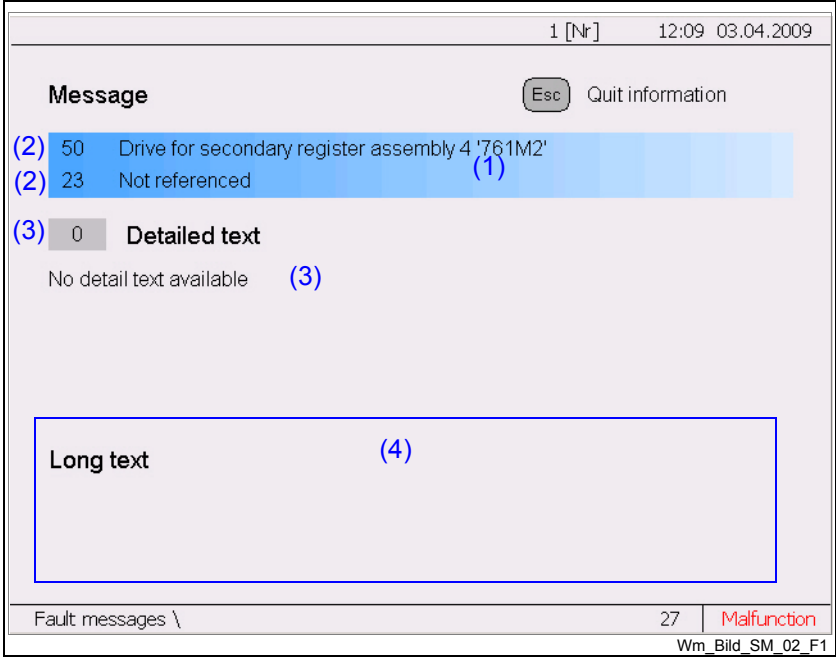

Function key	Function
Esc ESC *	Exit mask, return to fault messages

Variable		Meaning
(1)	**Message**	Text of message (background according to type of message: red, blue, gray)
(2)	XXX XXX	• Message No. = location • Message No. = text
(3)	**Detailed text** XXXX	• Message explanation • Information no. The detailed text contains additional information for localization and allocation of concerned elements. For example, 9023 ⇨ ink key no. 23 (counted from the first ink key in zone A) caused fault
(4)	**Additional text**	Possible causes

2.4.30 Fault messages\history

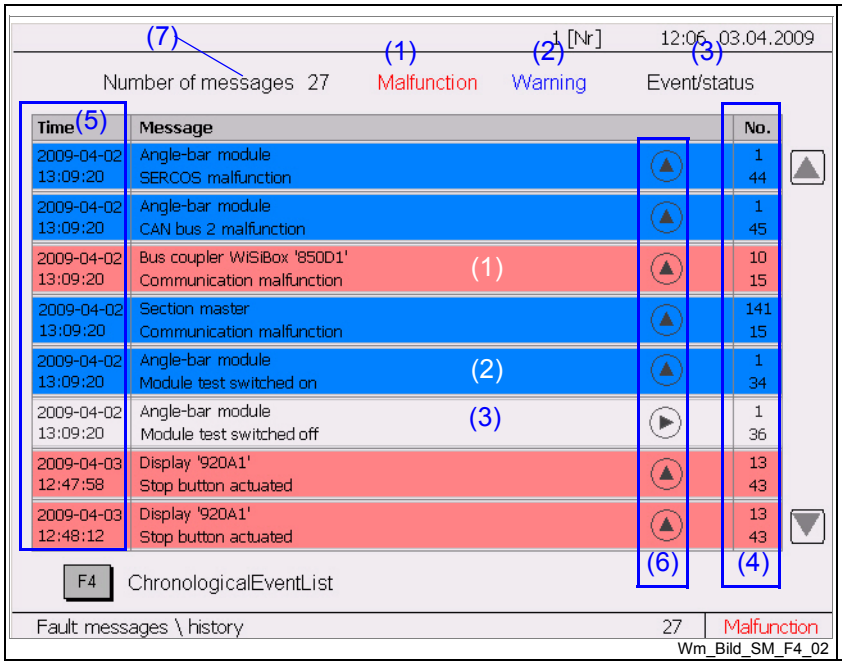

Function key		Function
Esc	ESC *	Exits mask, returns to fault message
F4	ChronologicalEventList	Call up ChronologicalEventList mask

Variable		Meaning
(1)	**Malfunction**	Cause of fault / stop (red)
(2)	**Warning**	Warning is: irrelevant fault (blue)
(3)	**Event/status**	Event or message status no fault (gray)
(1)(2)(3)	**fault / warning/ event /status**	Messages sent (no color)
(4)	XXX XXX	• Message No. = location • Message No. = text
(5)	2007.10.11 21:12:21	• Time = date • Time = in hours, minutes and seconds
(6)	▲/▼/▶	The message is: on / sent / status changed
(7)	XXXX	Number of messages

2.4.31 Fault messages \ ChronologicalEventList

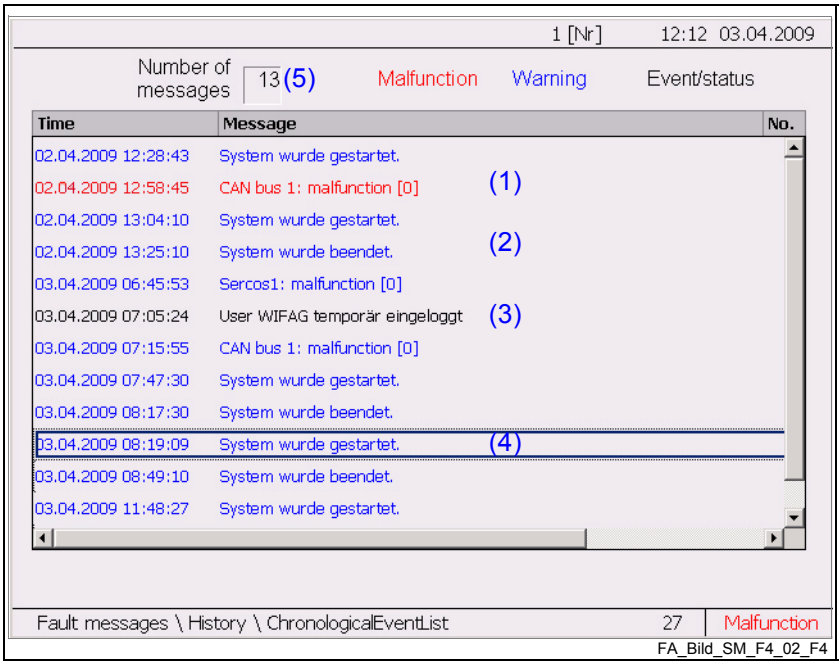

FA_Bild_SM_F4_02_F4

Function key	Function
Esc ESC *	Exit mask, return to fault message

Variable		Meaning
(1)	Malfunction	Cause of fault / stop (red)
(2)	Warning	Only warning, irrelevant fault (blue)
(3)	Event/status	Event or status of message, no fault (black)
(4)	Text	Selected message (with blue border)
(5)	XXXX	Number of messages

2.5 Install terminal software

Note

See Chapt. 3.5 Terminal in Reg. 11 Electrical setting and commissioning instructions in the *System* file.

3 Indicators and warning devices

Different indicator elements and warning devices are on the angle-bar module. Each display element signals specific events. See Chapt. 2.1 Angel-bar module control panel.

Tab. 8 Indicator elements for folder, folder-midsection, folder-superstructure, angle-bar module, draw roller module

Name	Appearance	Installation location	Display
Pushbutton *WEB ALLOCATION THROWON / THROWOFF*	(green) with signal lamp	Control panels *Web allocation*: • Folder superstructure	Allocate or de-allocate the web to/from folder. The web can be allocated to or de-allocated from the folder only with the production at standstill. (intermittent) **Lights continuously**: • when the web is allocated to the folder **Flashes:** • (1 Hz) when web belongs to the folder but is not yet allocated
Pushbutton *WEB ALLOCATION THROWON / THROWOFF* (white) with signal lamp		Control panels *Web allocation*: • Angle-bar module	Allocate or de-allocate the web (angle-bar module) to the production. The web can be allocated to or de-allocated from the production only with the production at standstill. (intermittent) **Lights:** • when the web (angle-bar module) is allocated to the production **Flashes:** • (1 Hz) when web (angle-bar module) belongs to production but is not yet allocated
Pushbutton *DRIVE BACK FEED-IN CHAIN* (white) with signal lamp	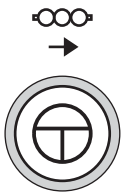	Angle-bar module (Fig. 2)	The feed-in chain is driven back into the chain buffer on the autopaster. **No light:** • Feed-in chain is in the autopaster **Flashes slowly:** • Web lead has to be detached **Flashes rapidly:** • Drive stations, switches, switch crossings disabled **Continuous light:** • Feed-in chain drives back

Tab. 8 (Cont. Tab.) Indicator elements for folder, folder-midsection, folder-superstructure, angle-bar module, draw roller module

Name	Appearance	Installation location	Display
Pushbutton *REFERENCE* (white) with signal lamp		Angle-bar module operating side	For positioning and referencing the register and angle bars. **No light:** • Referenced and positioned **Flashes:** • not referenced **Flashes rapidly:** • drive malfunction **Continuous light:** • not positioned
Warning lamp (orange)	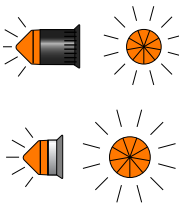	• Angle-bar module • Folder-midsection/superstructure • Folder	**Flashes slowly:** • When the system is to be run in a few seconds in isolated or interconnected mode. **Lights continuously:** • During the enabling time and warning-free enabling time of all run commands of paper guide drives.
Hooter (black)	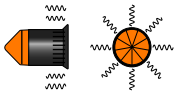	• Angle-bar module • Folder-midsection/superstructure • Folder	**Sounds:** • When the system part is to be operated in a few seconds.
Pushbutton *EMERGENCY-STOP* (red on yellow background) with red signal lamp	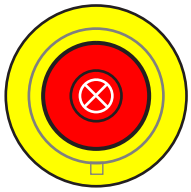	• Angle-bar module • Draw roller module • Folder control systems cabinet • Folder superstructure control cabinet	**Signal lamp lights up continuously:** • if an *EMERGENCY-STOP* button is pressed at another point. **Signal lamp flashes (1 Hz):** • as long as this button is pressed.

4 Malfunction indicators

Note

All malfunctions on the angle-bar module are displayed on the angle-bar module terminal Chapt. 2.4.28 Error messages. Refer also to the messages of the malfunction printer.

4 Operation

1 General safety information 4.3

2 Operating modes 4.4
2.1 Restrictions due to open guards 4.4
2.2 Run commands in production 4.4
2.3 Run commands in isolated mode 4.5

3 Allocation and de-allocate function groups 4.6

4 Angel-bar module control panel 4.7

5 Operating the pressure rollers 4.8

6 Place cutter in the ON or OFF position 4.9

7 Operate angle bars 4.10
7.1 Reposition leading angle bar 4.10
7.2 Reposition trailing angle bar 4.12
7.3 Emergency adjustment of the angle bars 4.14
7.4 Referencing / positioning 4.16

8 Right-angle web lead roller (optional) 4.20

9 Secondary register operation 4.22
9.1 Emergency adjustment of the secondary register roller 4.22
9.2 Referencing / positioning 4.24

10 Operate ribbon register 4.27
10.1 Emergency adjustment of the ribbon register roller 4.27
10.2 Referencing / positioning 4.29

11 Operate draw rollers 4.33
11.1 Draw roller tests 4.33

12 Operate secondary register 4.35
12.1 Paper dust extractor 4.35
12.2 Duct fan 4.36

1 General safety information

DANGER	**Danger!** Observe **safety regulations**! => Observe the register *Important for your safety*.
WARNING	**Risk of injury!** **Hearing damage** may occur at noise levels over 90 dB(A)! => You must wear hearing protection when in the machine room during production.
DANGER	**Risk of lethal injury!** **Operation** of the function, interconnection or production group! => Before entering each command at a control console, terminal or control panel, make certain that nobody is in the danger zone. => When the hooters of the system sound, immediately leave the danger zones of moving parts.
CAUTION	**Machine damage!** Damage to **machine parts** due to improper operation! => Before operation, ensure that that no prohibited or unsecured objects are in the machine area.
WARNING	**Risk of injury!** **Risk of being trapped and crushed** by moving parts! => For inspection work, actuate the *SAFE-STOP* pushbutton. => Place *Work in progress!* warning signs on the corresponding terminals and control panels.

2 Operating modes

Contents

This chapter contains the following information:

- Chapt. 2.1 Restrictions due to open guards
- Chapt. 2.2 Run commands in production
- Chapt. 2.3 Run commands in isolated mode

2.1 Restrictions due to open guards

In this function group there are no monitored guards.

2.2 Run commands in production

Run commands in interconnected mode can only be carried out simultaneously from a single control device within an interconnected group. This is possible from terminals and control stations of this interconnected group.

Tab. 1 Run commands in production

Control device	Run commands				
	Reference Positioning	INCH FORWARD	INCH BACK	FEED IN	FASTER in TEST drive
Terminal				●	
Control panel on the angle-bar module	1)			●	

● = possible run commands for draw roller
1) = only for angle bar register adjustment

2.3 Run commands in isolated mode

In isolated mode all drives can be activated and this only from a control device from which good visibility is guaranteed.

Tab. 2 Run commands in isolated mode

Control device	Run commands				
	Reference Positioning	INCH FORWARD	INCH BACK	FEED IN	FASTER in TEST drive
Terminal		1)	1)		●
Control panel on the angle-bar module	1)	1)	1)	●	

● = possible run commands for draw roller
1) = only for register adjustment

3 Allocation and de-allocate function groups

Note

Operating instructions are in Chapt. 2 Allocations and combined groups in Reg. 4 Operation in the *System* file.

4 Angel-bar module control panel

Fig. 1 Angel-bar module control panel

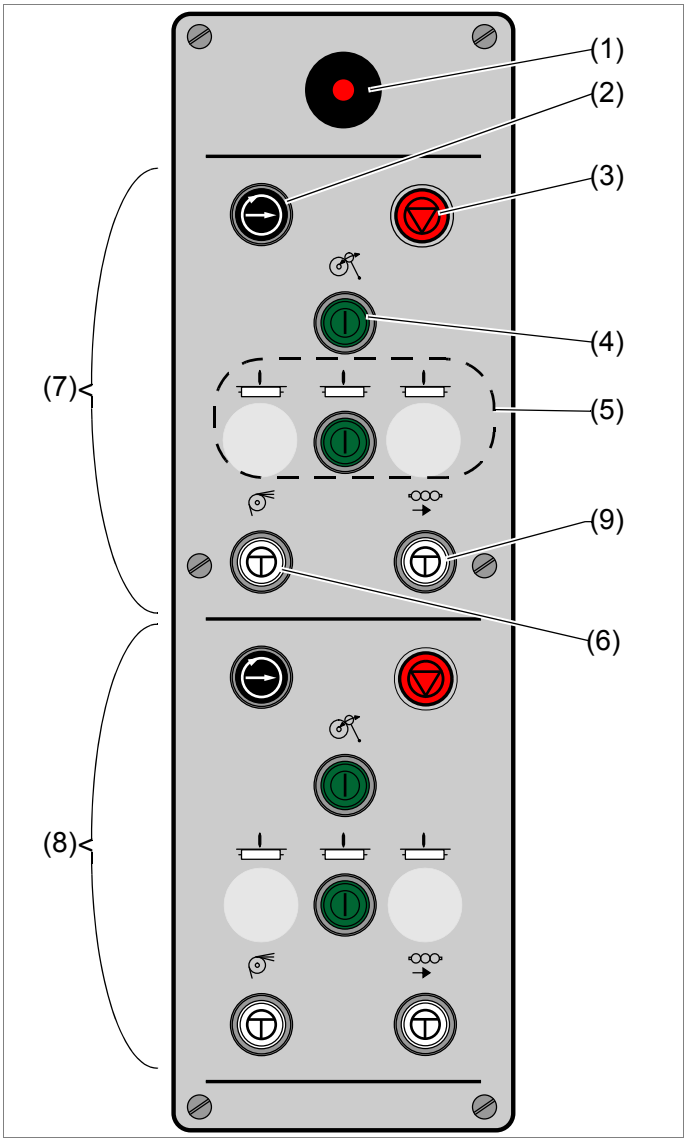

(1) *SAFE-STOP* pushbutton with signaling (lower angle-bar module)
(2) *FEED-IN* pushbutton
(3) *STOP* pushbutton with signaling
(4) *Contact pressure roller* pushbutton with signaling
(5) Pushbutton *Cutting disk* with signaling
(6) Pushbutton Web allocation
(7) Top angle-bar assembly
(8) Bottom angle-bar assembly
(9) Pushbutton *Send back feed-in chain*

5 Operating the pressure rollers

Requirements

- Production group at standstill
- Shut-off valve of the filter-regulator-lubricator unit in position *OPEN*
- Operating pressure of the filter-regulator-lubricator unit set to 6.5 bar

Materials needed

- None

⚠ WARNING	**Risk of injury!** **Risk of crushing** due to throwon movement of the pressure rollers! => Before pressing a pushbutton on the control panel, make certain that nobody is in the danger zone of the pressure rollers.

1. Pressing the pushbutton (4) on the control panel (Fig. 1) switches the pressure rollers (Fig. 2) *ON* and *OFF* (alternating).

> Integrated check lamp *lights* when pressure rollers are in the *ON* position.

> Integrated check lamp *flashes* if there is a SETPOINT/ACTUAL difference of the *ON* or *OFF* position (for example when the pressure rollers are *OFF* but must be *ON* after production allocation).

Fig. 2 Pressure roller

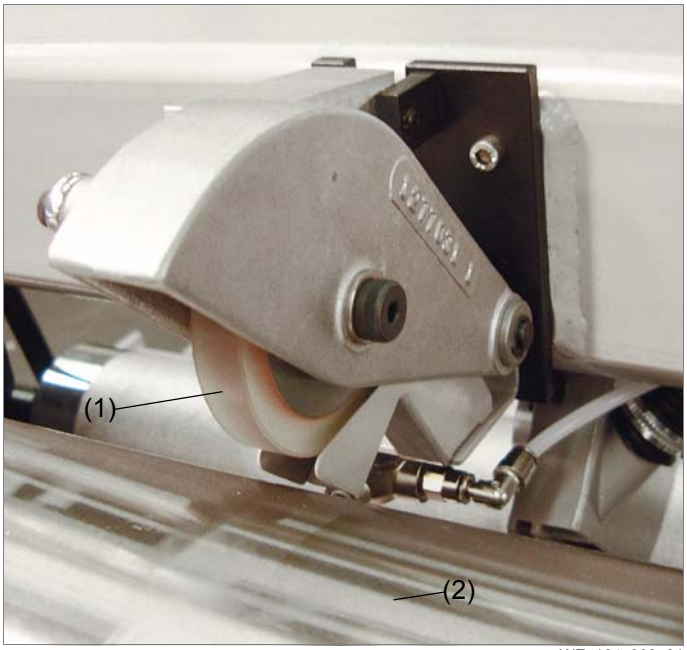

WE_164_002_01

(1) Pressure roller
(2) Draw roller

6 Place cutter in the ON or OFF position

Requirements

- Production group at standstill
- Shut-off valve of the filter-regulator-lubricator unit in position *OPEN*
- Operating pressure of the filter-regulator-lubricator unit set to 6.5 bar

Materials needed

- None

WARNING	**Risk of injury!** **Risk of crushing** by throwon movement of the cutter! => Before pressing a pushbutton on the control panel, make certain that nobody is in the danger zone of the cutters.

WARNING	**Risk of injury!** **Injury through cuts** from the cutter! => Before pressing a pushbutton on the control panel, make certain that nobody is in the danger zone of the cutters.

1. Pressing the pushbutton (5) on the control panel (Fig. 1) switches the cutters *ON* and *OFF* (alternating).

> Integrated check lamp *lights* when cutters are in the *ON* position.

> Integrated check lamp *flashes* if there is a SETPOINT/ACTUAL difference of the *ON* or *OFF* position (for example when the cutters are *OFF* but must be *ON* after production allocation).

7 Operate angle bars

Contents

This chapter contains the following information:

- Chapt. 7.1 Reposition leading angle bar
- Chapt. 7.2 Reposition trailing angle bar
- Chapt. 7.3 Emergency adjustment of the angle bars
- Chapt. 7.4 Referencing / positioning

7.1 Reposition leading angle bar

Requirements

- Production group at standstill
- No paper webs fed in

Materials needed

- None

WARNING	**Risk of injury!** **Risk of being trapped and crushed** by moving parts! => Actuate the *SAFE-STOP* pushbutton. => Place *Work in progress!* warning signs on the corresponding terminals and control panels.

1. Slide the coupling ring (1) on blow air connection (2) in the direction of the arrow and pull out coupling union (3) on blast air hose (4) (Fig. 3).
2. Hold the leading angle bar (5) with one hand and with the other hand press the grip on the quick-action connector (8) in the arrow direction until the stop bolt (6) is released.
3. Move the angle bar (5) out of holder (7).
4. Lift the angle bar (5) and rotate around the lengthwise axis as far as the stop.
5. Reposition the angle bar with counter swiveling movement.
6. Place the angle bar on the new special holder and press stop bolt (6) into the guide slot of the holder (7).
7. After it snaps in with a counter movement, check that the angle bar is firmly attached.
8. Press the coupling union (3) from blast air hose (4) into blast air connection (2) until it snaps in.

Fig. 3 Procedure for repositioning leading WS

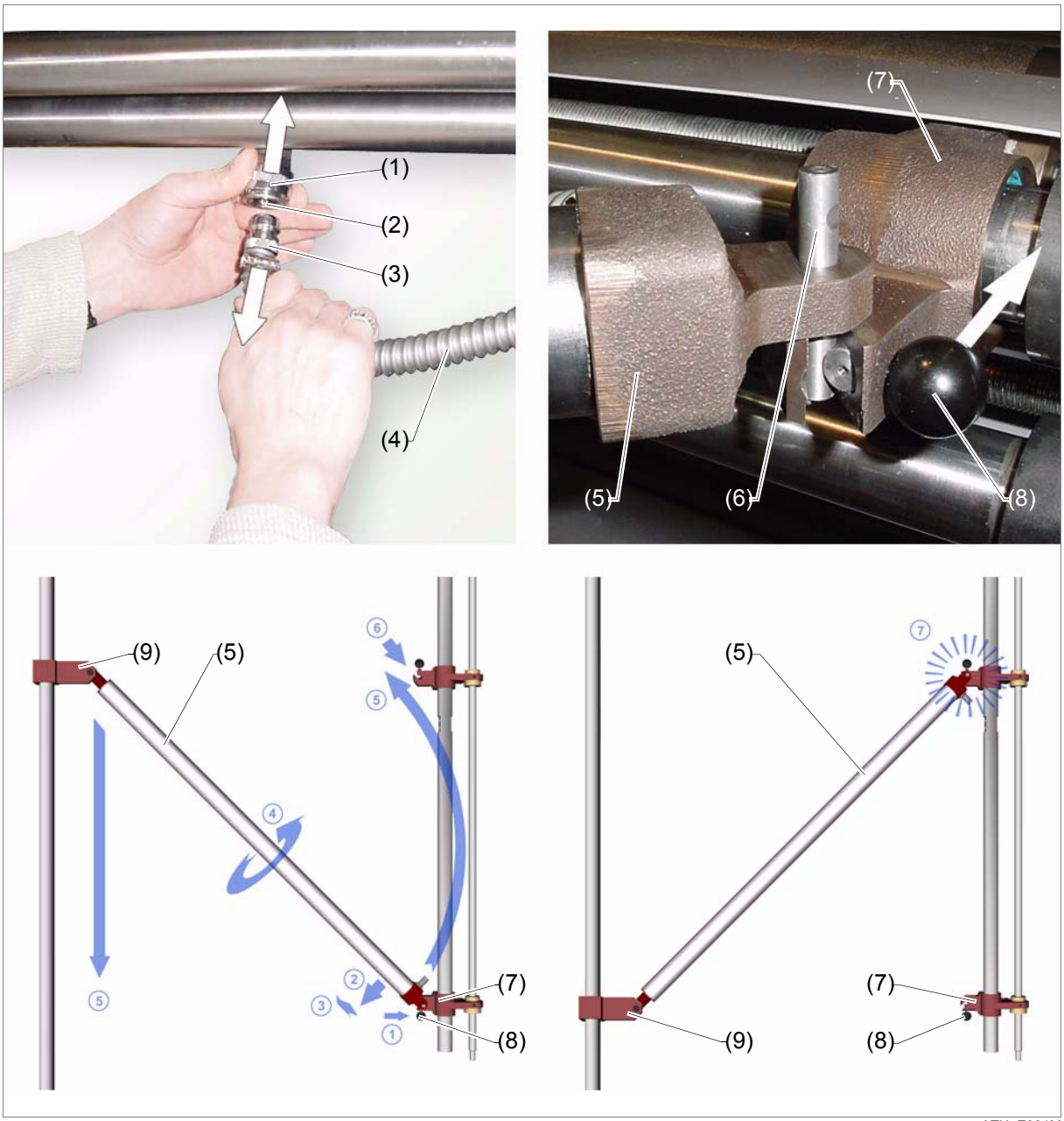

(1) Coupling ring
(2) Blast air connection
(3) Coupling union
(4) Blast air hose
(5) Leading angle bar
(6) Stop bolt
(7) Holder for leading angle bar
(8) Grip on the quick-action connector
(9) Holder fixed

7.2 Reposition trailing angle bar

Requirements

- Production group at standstill
- No paper webs fed in

Materials needed

- None

WARNING	**Risk of injury!** **Risk of being trapped and crushed** by moving parts! => Actuate the *SAFE-STOP* pushbutton. => Place *Work in progress!* warning signs on the corresponding terminals and control panels.

1. Slide the coupling ring (1) on blow air connection (2) in the direction of the arrow and pull out coupling union (3) on blast air hose (4) (Fig. 4).
2. Hold the trailing angle bar (5) with one hand and with the other hand pull the grip on the quick-action connector (8) in the arrow direction until the stop bolt (6) is released.
3. Move the angle bar (5) out of holder (7).
4. Lower the angle bar (5) and rotate around the lengthwise axis as far as the stop.
5. Reposition the angle bar with counter swiveling movement.
6. Place the angle bar on the new holder (7) and press stop bolt (6) into the guide slot of the holder (7).
7. After it snaps in with a counter movement, check that the angle bar is firmly attached.
8. Press the coupling union (3) from blast air hose (4) into blast air connection (2) until it snaps in.

Fig. 4 Procedure for repositioning trailing WS (angle bar)

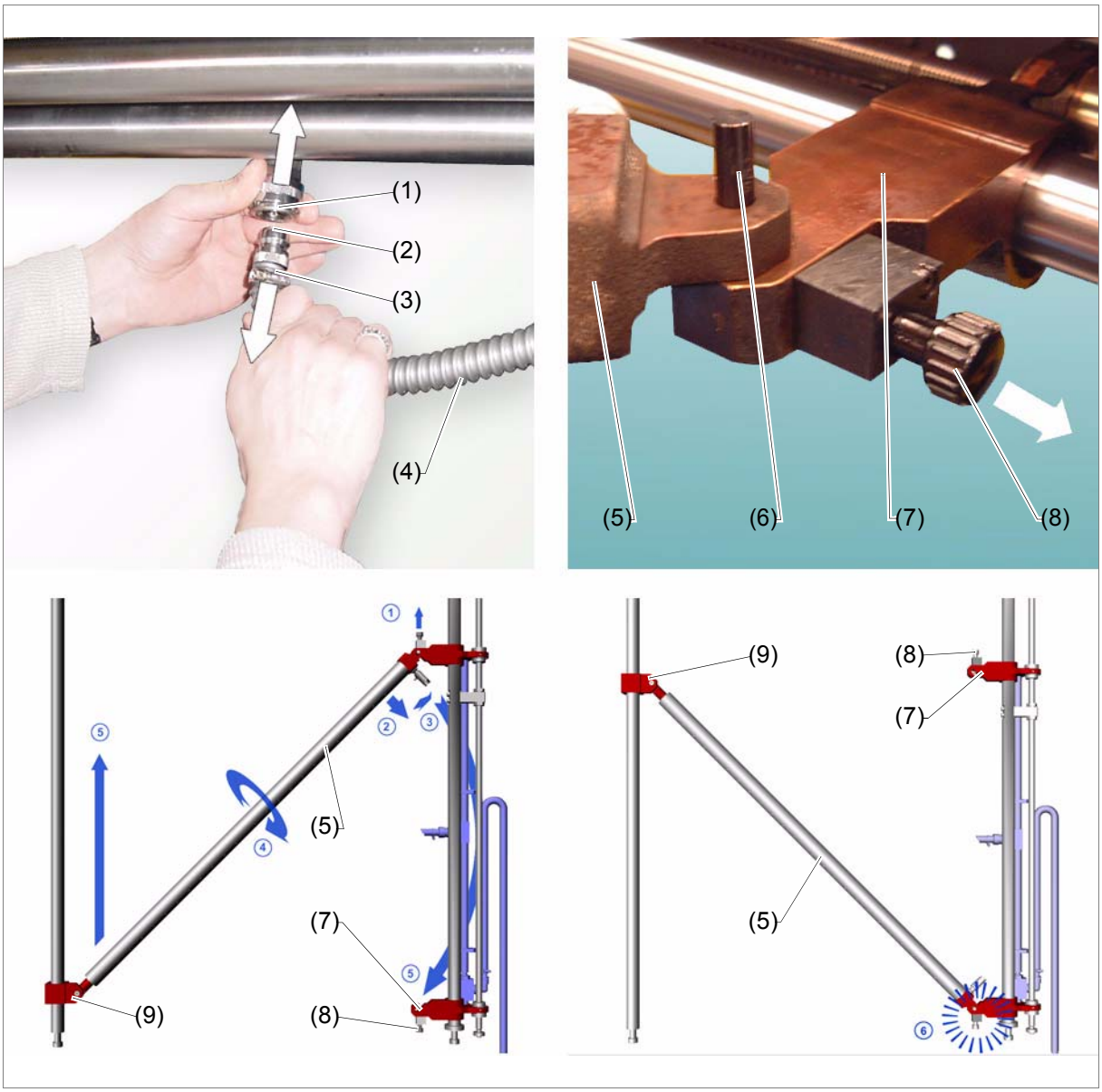

(1) Coupling ring
(2) Blast air connection
(3) Coupling union
(4) Blast air hose
(5) Trailing angle bar
(6) Stop bolt
(7) Holder for trailing angle bar
(8) Grip on the quick-action connector
(9) Holder fixed

7.3 Emergency adjustment of the angle bars

Requirements

- Angle-bar drive failure
- Production group / function group at standstill

Materials needed

- Allen key set
- Universal key

⚠ WARNING	**Risk of injury!** **Risk of crushed** by unintentional rotation of the adjusting spindle! => Actuate the *SAFE-STOP* pushbutton. => Place *Work in progress!* warning signs on the corresponding terminals and control panels.

1. Open door side I with universal key.
2. Perform required angle bar adjustment by turning the adjusting screw (1) (4) on the adjustment spindle (2) (3) (Fig. 5).
3. Close doors side I.
4. Use the *SAFE-STOP* pushbutton to electrically enable; remove the *Work is in progress!* warning notice.

Note

- Rotating the adjusting screw (1) (2) clockwise causes the angle bar to move toward side I (Fig. 6).
- Rotating the adjusting screw (1) (2) counter-clockwise causes the angle bar to move toward side II.

Fig. 5 Emergency adjustment of the angle bars

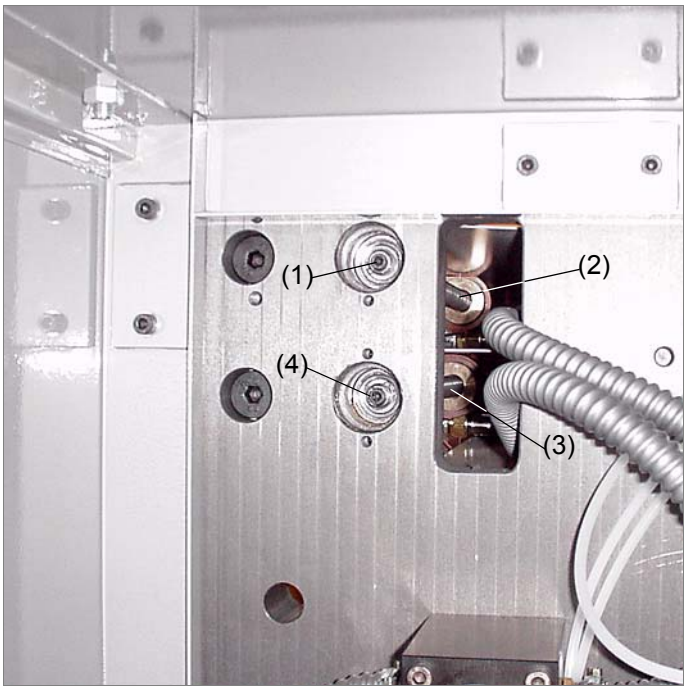

ATU_129_033_01

(1) Adjusting screw for leading angle bar
(2) Adjustment spindle for leading angle bar
(3) Adjustment spindle for trailing angle bar
(4) Adjustment screw for trailing angle bar

Fig. 6 Angle bar adjustment directions

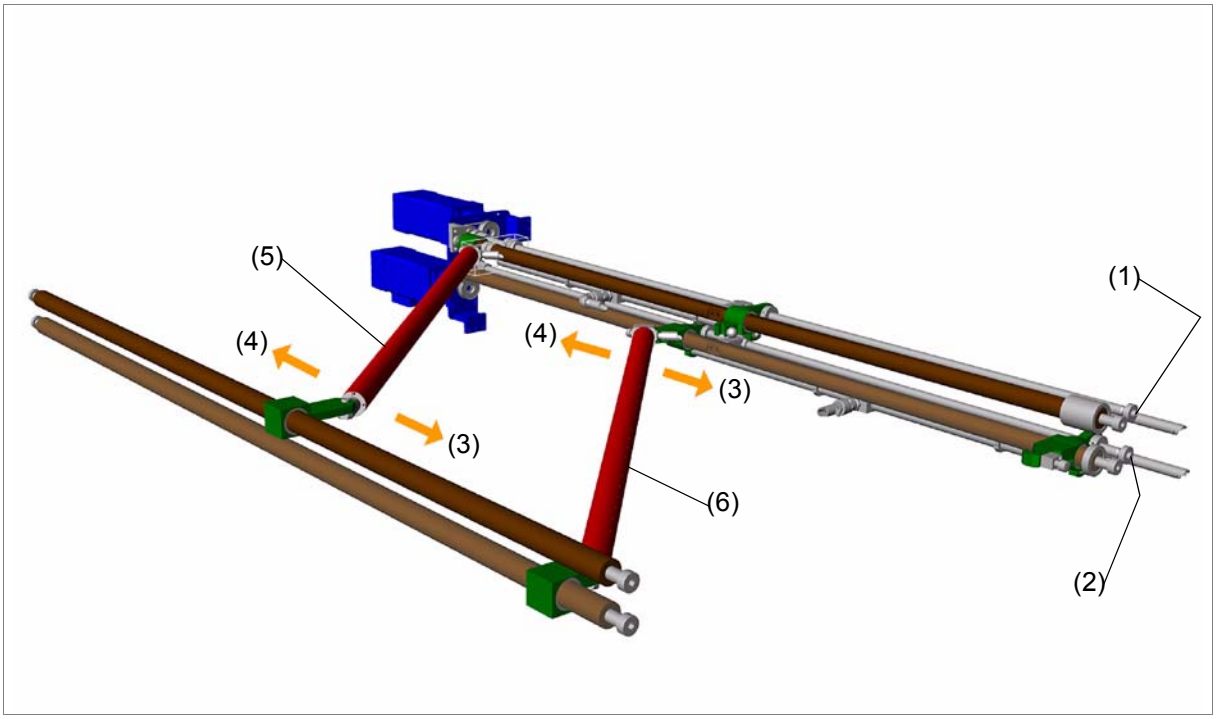

ATU_L001M_02

(1) Adjusting screw for leading angle bar
(2) Adjustment screw for trailing angle bar
(3) Adjustment direction toward side I
(4) Adjustment direction toward side II
(5) Leading angle bar
(6) Trailing angle bar

7.4 Referencing / positioning

Note

The register has to be re-referenced only after a drive or belt change, failure of a compact inverter or the control system (SYMAC).
Referencing is performed only directly on the concerned module, with the reference key, to avoid danger and positioning errors.

Requirements

- Production group at standstill
- No paper webs fed in
- No *STOP* or *SAFE-STOP* on the function group

Materials needed

- Central control console supplier's documentation

Note

The states of the register are visible on the terminal in the Menu Printer \ Register positions mask as per Reg. 3 Control elements.

Tab. 3 Behavior of the angle bars in production mode

State	Behavior with loaded production with preset values:
Machine at standstill	• Angle bars move *fast* to preset positions when the Reference / Positioning button is pressed
Machine at n≥*FASTER*	• Angle bars move *slowly* to preset positions independent of whether there is paper in the machine or not! ***REFERENCE* pushbutton has no effect!**
Machine when *FEEDING IN*	• When the registers move, the ***REFERENCE* pushbutton has no effect!** • Angle bars move *fast* to preset positions when the Reference / Positioning button is pressed

Fig. 7 Positioning, angle-bar system

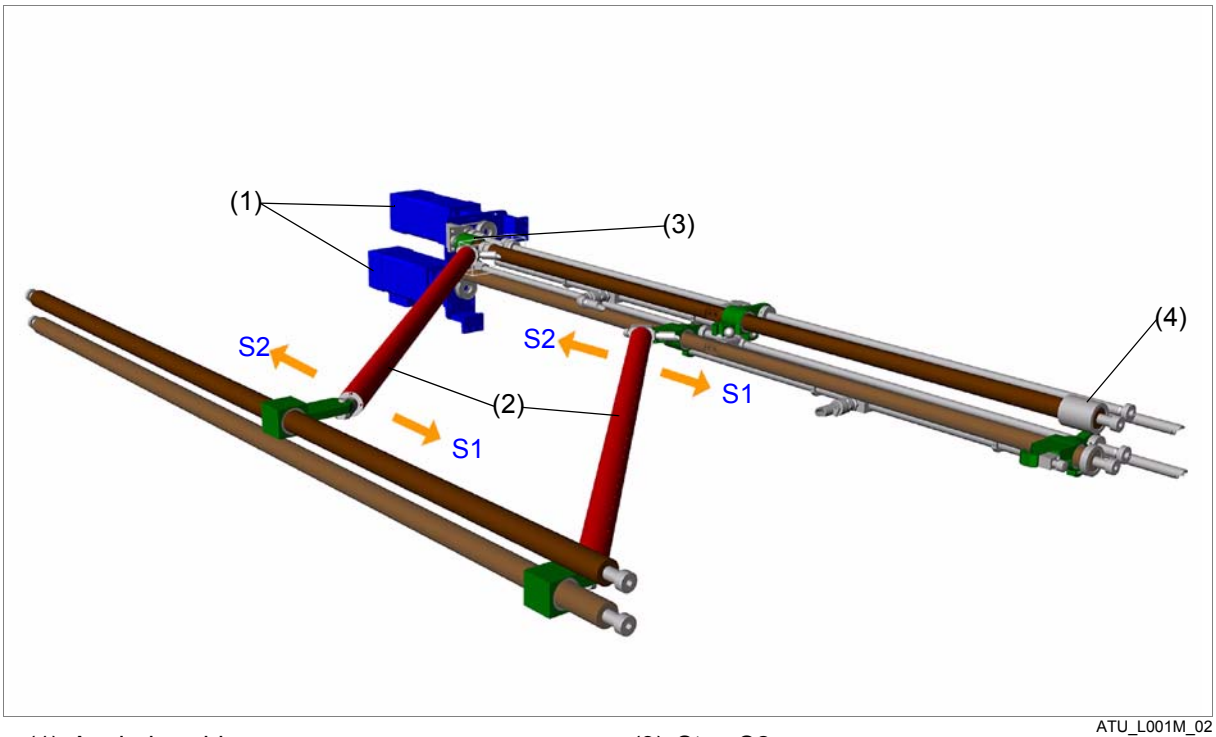

(1) Angle-bar drives
(2) Angle bars
(3) Stop S2
(4) Stop S1

WARNING	**Risk of injury!** **Risk of being trapped and crushed** by moving parts! => Before pressing a pushbutton on the control panel, make certain that nobody is in the danger zone.

1. Keep *REFERENCE* pushbutton depressed.

> Register is referenced when the signal lamp no longer flashes.

> Register is referenced and set.

2. At the terminal, change to the mask Menu Reference \ Register according to Reg. 3 Control elements.

> Reference position and register status is signaled on the terminal.

Tab. 4 Reference pushbutton

Name	Symbol	Control location	Effect / display
Pushbutton *REFERENCE* (white) with signal lamp		Angle-bar module	For positioning and referencing the register and angle bars. **No light:** • Referenced and positioned • Or positioning not possible because another register is moving. **Flashes:** • not referenced **Flashes rapidly:** • drive malfunction **Continuous light:** • not positioned

3. While referencing the angle bars, make sure that they travel to stop S2 (3) (Fig. 7)!

If this is not the case:

The angle bars are incorrectly positioned!

=> Clean spindle and guides and lubricate in accordance with Chapt. 4.5 Cleaning the angle bars in Reg. 6 Maintenance and Chapt. 2.1 Individual oil lubrication points in Reg. 5 Lubrication.

=> *Reboot* concerned module or drive device (the voltage of the device must be switched off at least 20 seconds) in accordance with WIFAG *electrical circuit diagram Wx*.

=> Reference angle bars again.

Note

The position setpoint can be changed on the central control console.

4. To position the register, keep *REFERENCE* pushbutton depressed.

> The register travels to the last setpoint changed from the central control console.

> The register is positioned when the signal lamp is no longer lit.

Note

The test setpoint can be changed only on the angle-bar module terminal!

5. At the terminal, change to the mask Menu Test \ Angle bars according to Reg. 3 Control elements.
6. Enter the position setpoint for the concerned angle bar.
7. Press the **[Enter]** key.
8. Keep the *REFERENCE* pushbutton depressed.

> The angle bars move to the test position.

> The angle bars are at the test position when the signal lamp no longer flashes.

9. Alternatively, you can use the commands *INCH FORWARD / INCH BACKWARD* to move stepwise in the required direction.

> Position actual value and status are indicated on the terminal.

8 Right-angle web lead roller (optional)

Requirements

- Production group / function group at standstill
- No paper webs fed in

Materials needed

- None

WARNING	**Risk of injury!** **Risk of being trapped and crushed** by moving parts! => Actuate the *SAFE-STOP* pushbutton. => Place *Work in progress!* warning signs on the corre-sponding terminals and control panels.

1. Open interlocking device on both holders and lift latch.

WARNING	**Risk of injury! Right-angle web lead roller is released!** **Danger of crushing** due to falling right-angle web lead roller. => Do not leave right-angle web lead roller unsecured in holder. => Remove right-angle web lead roller.

2. At the new location, screw off the interlocking device (2) and lift the latch (1) (Fig. 8) to (Fig. 10).
3. Change over the right-angle web lead roller (4).
4. Pivot latch over axis of the right-angle web lead roller (4) and close the interlocking device (2).
5. Check that the interlocking device (2) engages the latch (1).

Fig. 8 Holder (open)

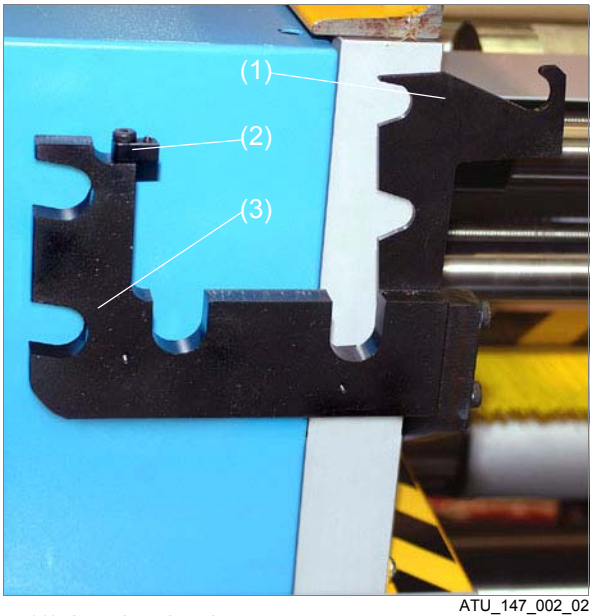

ATU_147_002_02

(1) Latch raised
(2) Interlocking device in open position
(3) Holder

Fig. 9 Holder (closed)

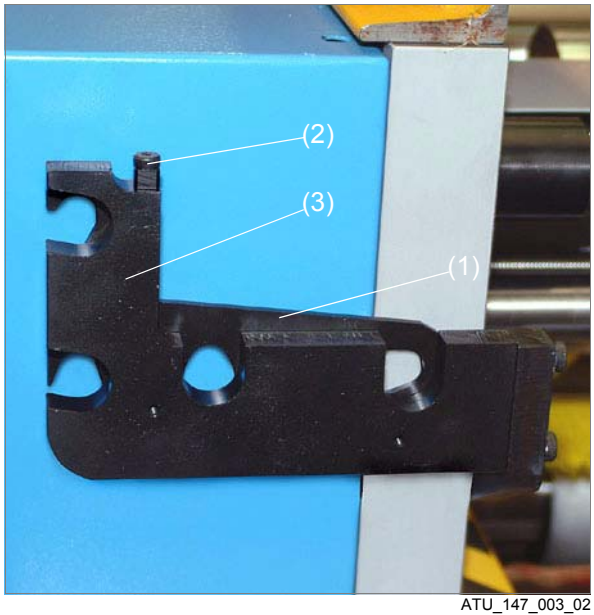

ATU_147_003_02

(1) Latch closed
(2) Interlocking device in secured position
(3) Holder

Fig. 10 Right angle web lead roller

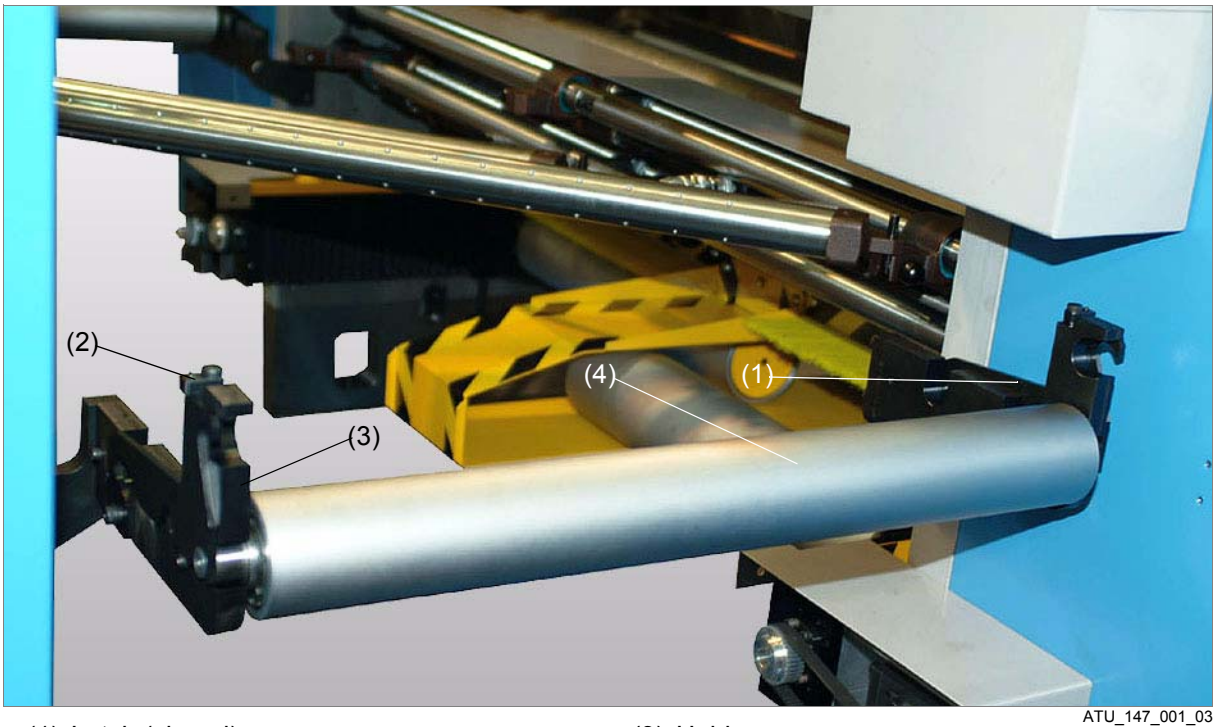

ATU_147_001_03

(1) Latch (closed)
(2) Interlocking device in secured position
(3) Holder
(4) Right angle web lead roller

9 Secondary register operation

Contents

This chapter contains the following information:

- Chapt. 9.1 Emergency adjustment of the secondary register roller
- Chapt. 9.2 Referencing / positioning

9.1 Emergency adjustment of the secondary register roller

Requirements

- Secondary register roller drive has failed
- Production group / function group at standstill

Materials needed

- Allen key set

WARNING	**Risk of injury!** **Risk of crushing** by unintentional rotation of the ball screw spindle! => Actuate the *SAFE-STOP* pushbutton. => Place the *Work is in progress!* warning sign.

1. Perform required adjustment of secondary register roller (1) by turning the adjusting screw (3) on the ball screw spindle (2) (Fig. 11).
2. Use the *SAFE-STOP* pushbutton to electrically enable; remove the *Work is in progress!* warning notice.

Note

- Rotating the adjusting screw (3) clockwise causes the secondary register roller (1) to move in the plus direction (4) (Fig. 12).
- Rotating the adjusting screw (3) counter-clockwise causes the secondary register roller (1) to move in the minus direction (5).

Fig. 11 Emergency adjustment of the secondary register roller

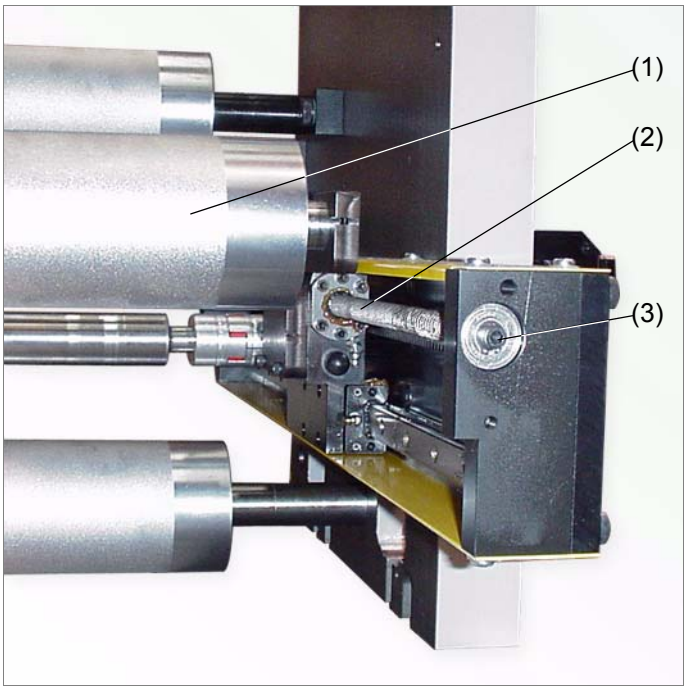

ATU_129_034_01

(1) Secondary register roller
(2) Ballscrew spindle
(3) Adjusting screw

Fig. 12 Displacement direction of the secondary register roller

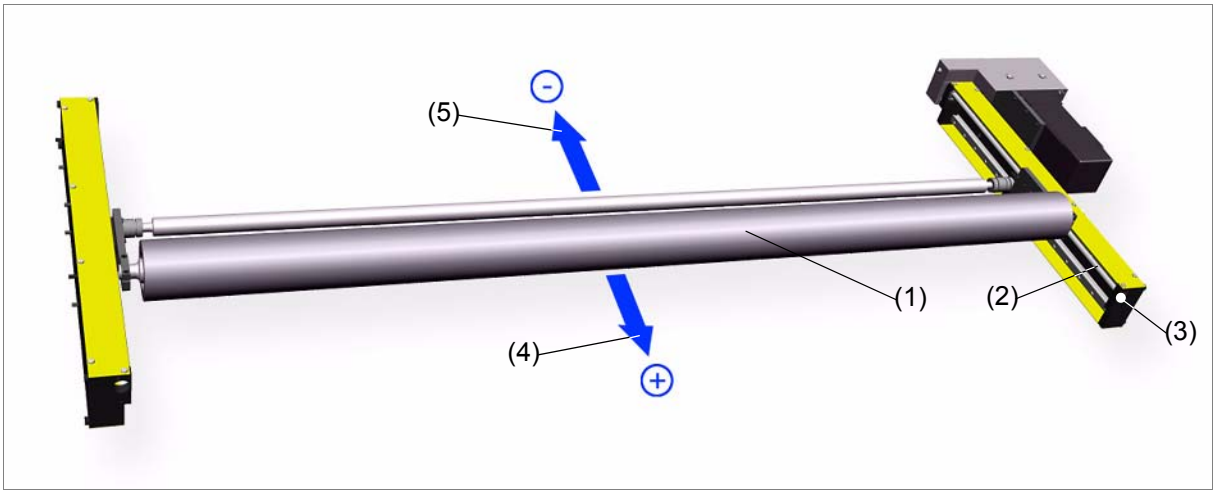

ATU_M001M_01

(1) Secondary register roller
(2) Ballscrew spindle
(3) Adjusting screw
(4) Plus displacement direction
(5) Minus displacement direction

9.2 Referencing / positioning

Note

The register has to be re-referenced only after a drive or belt change, failure of a compact inverter or the control system (SYMAC).
Referencing is performed only directly on the concerned module, with the reference key, to avoid danger and positioning errors.

Requirements

- Production group at standstill
- No paper webs fed in
- No *STOP* or *SAFE-STOP* on the function group

Materials needed

- Central control console supplier's documentation

Note

The states of the register are visible on the terminal in the Menu Printer \ Register positions mask as per Reg. 3 Control elements.

Tab. 5 Behavior of the secondary register in production mode

State	Behavior with loaded production with preset values:
Machine at standstill	• Secondary registers move *fast* to preset positions when the Reference / Positioning button is pressed.
Machine at n≥*FASTER*	• Secondary registers move *slowly* to preset positions independent of whether there is paper in the machine or not! ***REFERENCE* pushbutton has no effect!**
Machine when *FEEDING IN*	• When the registers move, the ***REFERENCE* pushbutton has no effect!** • Secondary registers move *fast* to preset positions when the Reference / Positioning button is pressed.

Fig. 13 Secondary register positioning

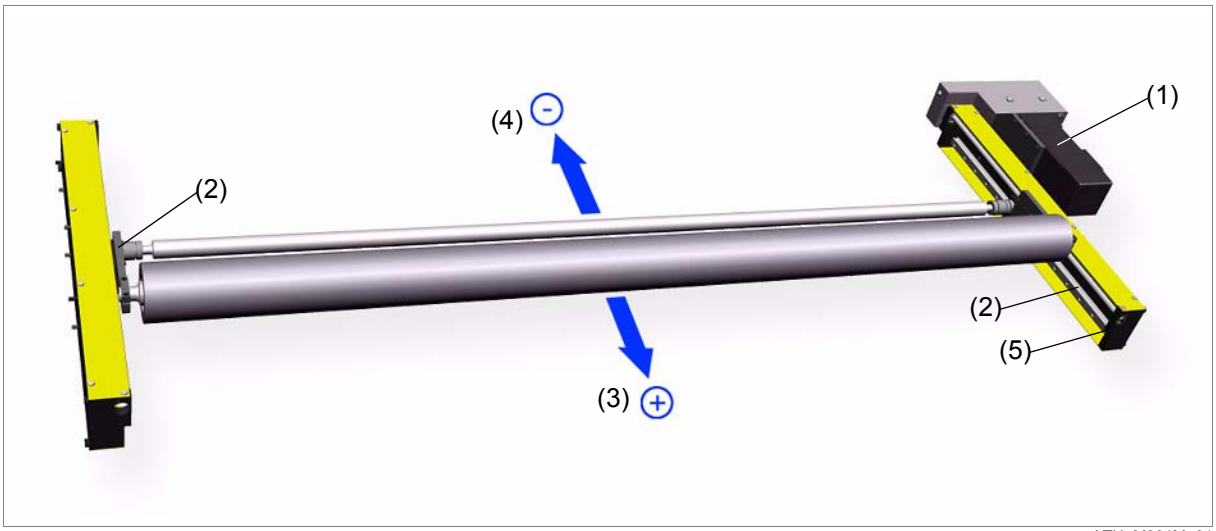

(1) Drive for secondary register
(2) Linear guides for secondary register roller
(3) Plus direction (longer paper path)
(4) Minus direction (shorter paper path)
(5) Mechanical stop (maximum position)

WARNING	
	Risk of injury! **Risk of being trapped and crushed** by moving parts! => Before pressing a pushbutton on the control panel, make certain that nobody is in the danger zone.

1. Keep *REFERENCE* pushbutton depressed.

> Signal lamp flashes, the register is being referenced.

> Signal lamp no longer flashes, then the register is referenced and set.

2. On the terminal, change to the Menu Reference mask according to Reg. 3 Control elements and select the desired register.

> Actual position and register status are indicated on the terminal.

Tab. 6 Reference pushbutton

Name	Symbol	Control location	Effect / display
Pushbutton *REFERENCE* (white) with signal lamp		Angle-bar module	For positioning and referencing the register and angle bars. **No light:** • Referenced and positioned • Or positioning not possible because another register is moving. **Flashes:** • not referenced **Flashes rapidly:** • malfunction of a drive **Continuous light:** • not positioned

Note

Position setpoint can be changed on the central control console.

3. To position the register, keep *REFERENCE* pushbutton depressed.

> Register travels to the last setpoint changed from the central control console.

> Register is positioned when the signal lamp is no longer lit.

Note

The test setpoint can be changed only on the angle-bar module terminal!

4. On the terminal, change to the menu Manual test / Secondary register mask according to Reg. 3 Control elements.
5. Enter the position setpoint for the concerned secondary register.
6. Press the **[Enter]** key.
7. Keep the *REFERENCE* pushbutton depressed.

> The registers move to the test position.

> The registers are at the test position when the signal lamp is no longer lit.

8. Alternatively, you can use the commands *INCH FORWARD / INCH BACKWARD* to move stepwise in the required direction.

> Actual value position or status is signaled on the terminal.

10 Operate ribbon register

Contents

This chapter contains the following information:

- Chapt. 10.1 Emergency adjustment of the ribbon register roller
- Chapt. 10.2 Referencing / positioning

10.1 Emergency adjustment of the ribbon register roller

Requirements

- Ribbon register roller drive has failed
- Production group / function group at standstill

Materials needed

- Allen key set

WARNING	
	Risk of injury! **Risk of being trapped and crushed** by moving parts! => Before pressing a pushbutton on the control panel, make certain that nobody is in the danger zone. => Actuate the *SAFE-STOP* pushbutton. => Place *Work in progress!* warning signs on the corresponding terminals and control panels.

1. Loosen retaining screws (2) and remove the lower cover (3) (Fig. 14).
2. Perform the desired adjustment of the ribbon register roller by turning the adjustment hexagon socket (4).
3. Mount the lower cover (3) and tighten the retaining screws (2).
4. Use the *SAFE-STOP* pushbutton to electrically enable; remove the *Work is in progress!* warning notice.

Fig. 14 Emergency adjustment of the ribbon register roller

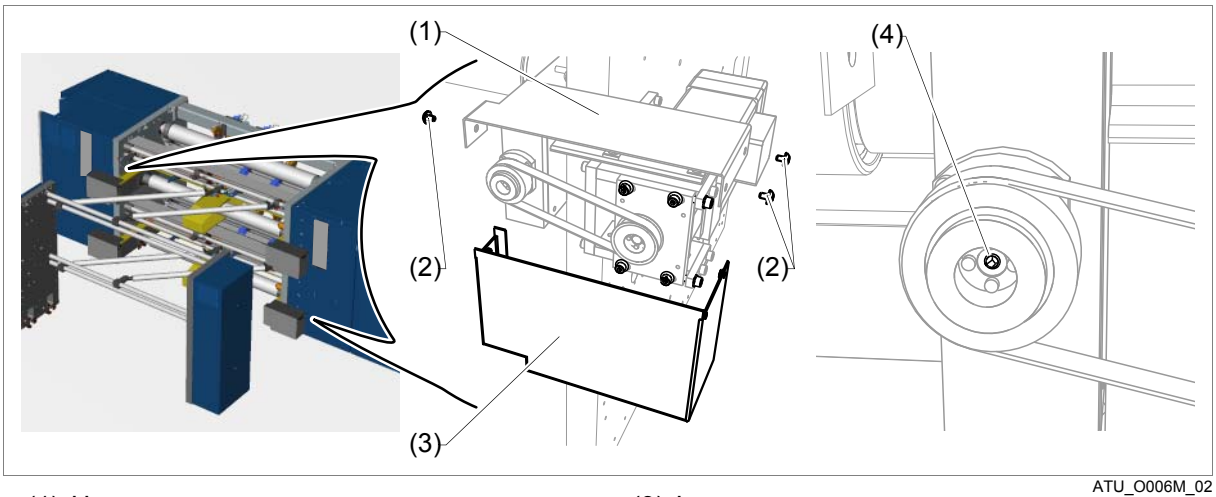

ATU_O006M_02

(1) Upper cover
(2) Retaining screw
(3) Lower cover
(4) Adjustment hexagon socket

Note

- Rotating the adjustment hexagon socket clockwise causes the ribbon register roller (1) (2) to move in the plus direction (3) (Fig. 15).
- Rotating the adjustment hexagon socket counter clockwise causes the ribbon register roller (1) (2) to move in the minus direction (4).

Fig. 15 Ribbon register adjustment direction

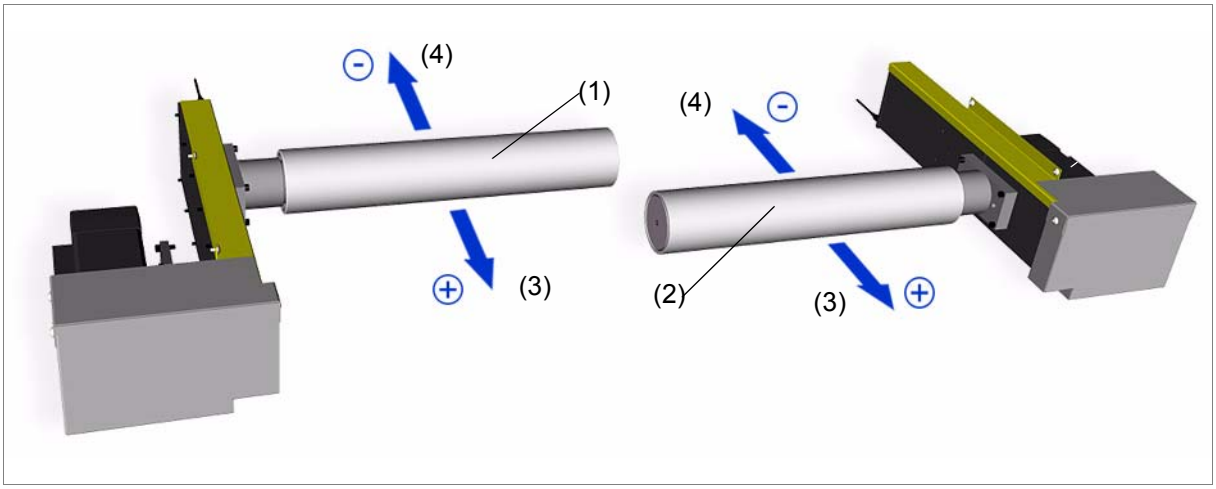

ATU_O004M

(1) Ribbon register roller side I
(2) Ribbon register roller side II
(3) Plus displacement direction
(4) Minus displacement direction

10.2 Referencing / positioning

Note

The register has to be re-referenced only after a drive or belt change, failure of a compact inverter or the control system (SYMAC).
Referencing is performed only directly on the concerned module, with the reference key, to avoid danger and positioning errors.

Requirements

- Production group at standstill
- No paper webs fed in
- No *STOP*or *SAFE-STOP* on the function group

Materials needed

- Central control console supplier's documentation

Note

The states of the register are visible on the terminal in the Menu Printer \ Register positions mask as per Reg. 3 Control elements.

Tab. 7 Behavior of the ribbon register in production mode

State	Behavior with loaded production with preset values:
Machine at stand-still	Web deallocated • With thrown on middle cutter: The ribbon registers move *fast* to preset positions when the Reference / Positioning button is pressed. • With thrown off middle cutter: The ribbon registers move *fast* to maximum position (toward FA) when the Reference / Positioning button is pressed.
	Web allocated • Only the angle bars move fast to preset position when the Reference / Positioning button is pressed.
Machine at n≥*FASTER*	• Ribbon registers move *slowly* to new specified position from central control console or cutting position control! **The *REFERENCE* pushbutton has no effect!**
Machine when *FEEDING IN*	• Without paper in WM: The ribbon registers move *fast* to maximum position (toward FA). • Paper detected in WM: Both ribbon registers move *fast* to the smaller of the two preset positions. **Middle cutters and pressure rollers are thrown on!** • When the ribbons are positioned on the former terminal (see Menu Printer in Reg. 3 Control elements in the former file), all ribbon registers which still are not at the preset position travel *fast* to the preset position. • **If the web is allocated, the *REFERENCE* pushbutton has no effect!**
	Special case (web deallocated): **The Reference *PUSHBUTTON* has no effect!** ***Special case (web deallocated):*** **The web lead can be cut and the paper crumpled!** • With thrown on middle cutter: The ribbon registers move *fast* to preset positions when the Reference / Positioning button is pressed. • With thrown off middle cutter: The ribbon registers move *fast* to maximum position (toward FA) when the Reference / Positioning button is pressed.

Fig. 16 Ribbon register positioning

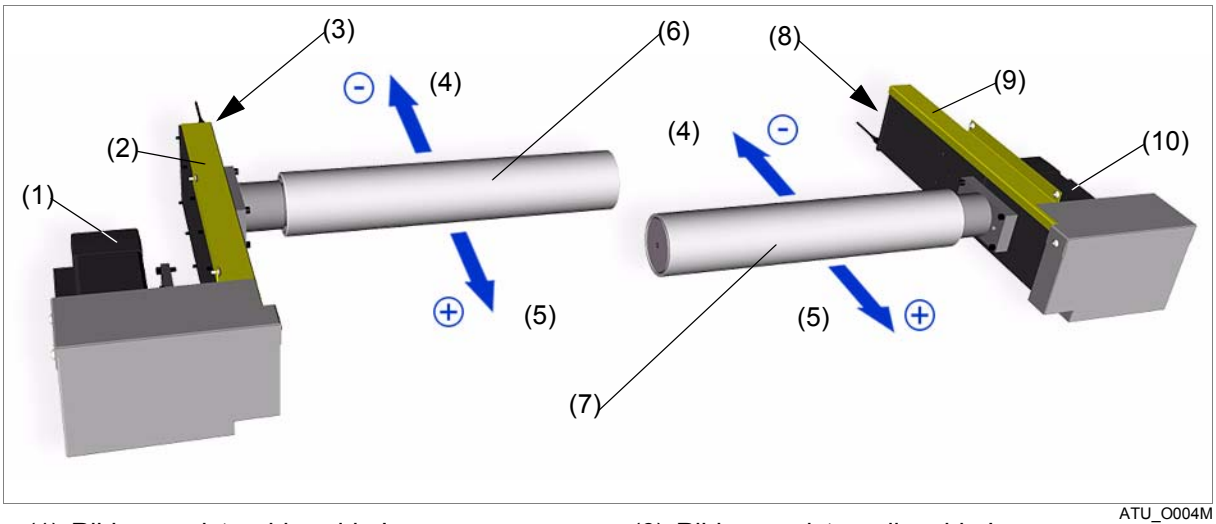

(1) Ribbon register drive side I
(2) Linear guide for ribbon register roller side I
(3) Mechanical stop (minimum position) side I
(4) Minus direction (shorter paper path)
(5) Plus direction (longer paper path)
(6) Ribbon register roller side I
(7) Ribbon register roller side II
(8) Mechanical stop (minimum position) side II
(9) Linear guide for ribbon register roller side II
(10) Ribbon register drive side II

WARNING	**Risk of injury!** **Risk of being trapped and crushed** by moving parts! => Before pressing a pushbutton on the control panel, make certain that nobody is in the danger zone.

1. Keep *REFERENCE* pushbutton depressed.

> The register is referenced when the signal lamp no longer flashes.

> The register is referenced and set.

2. At the terminal, change to the mask Menu Reference \ Register according to Reg. 3 Control elements.

> Reference position and register status is signaled on the terminal.

Tab. 8 Reference pushbutton

Name	Symbol	Control location	Effect / display
Pushbutton *REFERENCE* (white) with signal lamp		Angle-bar module	For positioning and referencing the register and angle bars. **No light:** • Referenced and positioned • Or positioning not possible because another register is moving. **Flashes:** • not referenced **Flashes rapidly:** • drive malfunction **Continuous light:** • not positioned

Note

The position setpoint can be changed on the central control console.

3. To position the register, keep *REFERENCE* pushbutton depressed.

> Register travels to the last setpoint changed from the central control console.

> Register is positioned when the signal lamp is no longer lit.

Note

The test setpoint can be changed only on the angle-bar module terminal!

4. At the terminal, change to the mask Menu Test \ Ribbon register according to Reg. 3 Control elements.
5. Enter the position setpoint for the concerned ribbon register.
6. Press the **[Enter]** key.
7. Keep the *REFERENCE* pushbutton depressed.

> The registers move to the test position.

> The registers are at the test position when the signal lamp no longer flashes.

8. Alternatively, you can use the commands *INCH FORWARD / INCH BACKWARD* to move stepwise in the required direction.

> Actual value position or status is signaled on the terminal.

> Check status display.

11 Operate draw rollers

Contents

This chapter contains the following information:

• Chapt. 11.1 Draw roller tests

11.1 Draw roller tests

Requirements

- Production group at standstill
- No paper webs fed in
- No *STOP* or *SAFE-STOP* on the function group

Materials needed

- None

WARNING	
	Risk of injury! **Hearing damage** may occur at noise levels over 90 dB(A)! => You must wear hearing protection when in the machine room during production.

=> At the terminal, change to the mask Menu Test \ Draw rollers according to Reg. 3 Control elements.

1. Select `Allocation test` for desired draw roller.

> Draw roller is allocated to the test.

2. Enter required setpoint with the `Speed setpoint` button.

> Test setpoint range 0...50000 [cyl/h].

3. Enter required setpoint with the `Acceleration setpoint` button.

> Test setpoint range 0...1200 [0.001 rev/s^2].

=> A setpoint entry window appears (Tab. 9).

Tab. 9 Setpoint entry window (sample: values may be different)

	Enter setpoint in the indicated range: *Minimum* / *Maximum* Make entry with the numeric keypad or with the **[+/-]** keys. **[ESC]** Exit entry window. **[Enter]** Confirm entry

4. Switch on with the `Start test mode` button.
> Draw roller accelerates and turns with the specified speed.
> Pay attention to any error messages on the terminal.
> Check status display.
5. Test run mode is interrupted with the commands *STOP* or *SAFE-STOP*.

12 Operate secondary register

Contents

This chapter contains the following information:

- Chapt. 12.1 Paper dust extractor
- Chapt. 12.2 Duct fan

12.1 Paper dust extractor

Requirements

- Production group at standstill
- Operating pressure of the filter-regulator-lubricator unit set to 6.5 bar

Materials needed

- None

WARNING	
	Risk of injury! **Risk of being trapped and crushed** by moving machine parts! => Place *Work in progress!* warning signs on the corre-sponding terminals and control panels. => Before entering each command at a terminal or control panel, make certain that nobody is in the danger zone.

1. At the terminal, change to the mask Menu Printer \ Subsystems according to Reg. 3 Control elements.
2. Switch paper dust extractor ON / OFF (alternating).

> Operating mode or malfunction is signaled on the terminal.

> Check status display.

12.2 Duct fan

Requirements

- Production group at standstill
- Operating pressure of the filter-regulator-lubricator unit set to 6.5 bar

Materials needed

- None

WARNING	**Risk of injury!** **Risk of being trapped and crushed** by moving machine parts! => Place *Work in progress!* warning signs on the corresponding terminals and control panels. => Before entering each command at a terminal or control panel, make certain that nobody is in the danger zone.

1. At the terminal, change to the mask Menu Printer \ Subsystems according to Reg. 3 Control elements.
2. Switch duct compressor ON / OFF (alternating).

> Operating mode or malfunction is signaled on the terminal.

> Check status display.

5 Lubrication

1 Overview 5.3
1.1 Lubrication systems 5.3
1.2 General safety information 5.4
1.3 Lubricant properties 5.6
1.4 Lubricant overview 5.7
1.5 Special lubricants and preservatives 5.8

2 Construction and function 5.9
2.1 Individual oil lubrication points 5.9
2.2 Individual grease lubrication points 5.9
2.3 Lubricated for life lubrication points 5.9
2.4 Cutter 5.10
2.5 Ribbon register linear guides 5.10

3 Replace components 5.11

4 Basic settings 5.12
4.1 Setting 5.12
4.2 Calibration 5.12
4.3 Testing 5.12

5 Lubrication instructions 5.13
5.1 Lubricate individual oil lubrication points 5.13
5.2 Lubricate individual grease lubrication points 5.15

1 Overview

Contents

This chapter contains the following information:

- Chapt. 1.1 Lubrication systems
- Chapt. 1.2 General safety information
- Chapt. 1.3 Lubricant properties
- Chapt. 1.4 Lubricant overview
- Chapt. 1.5 Special lubricants and preservatives

1.1 Lubrication systems

Fig. 1 Lubrication points

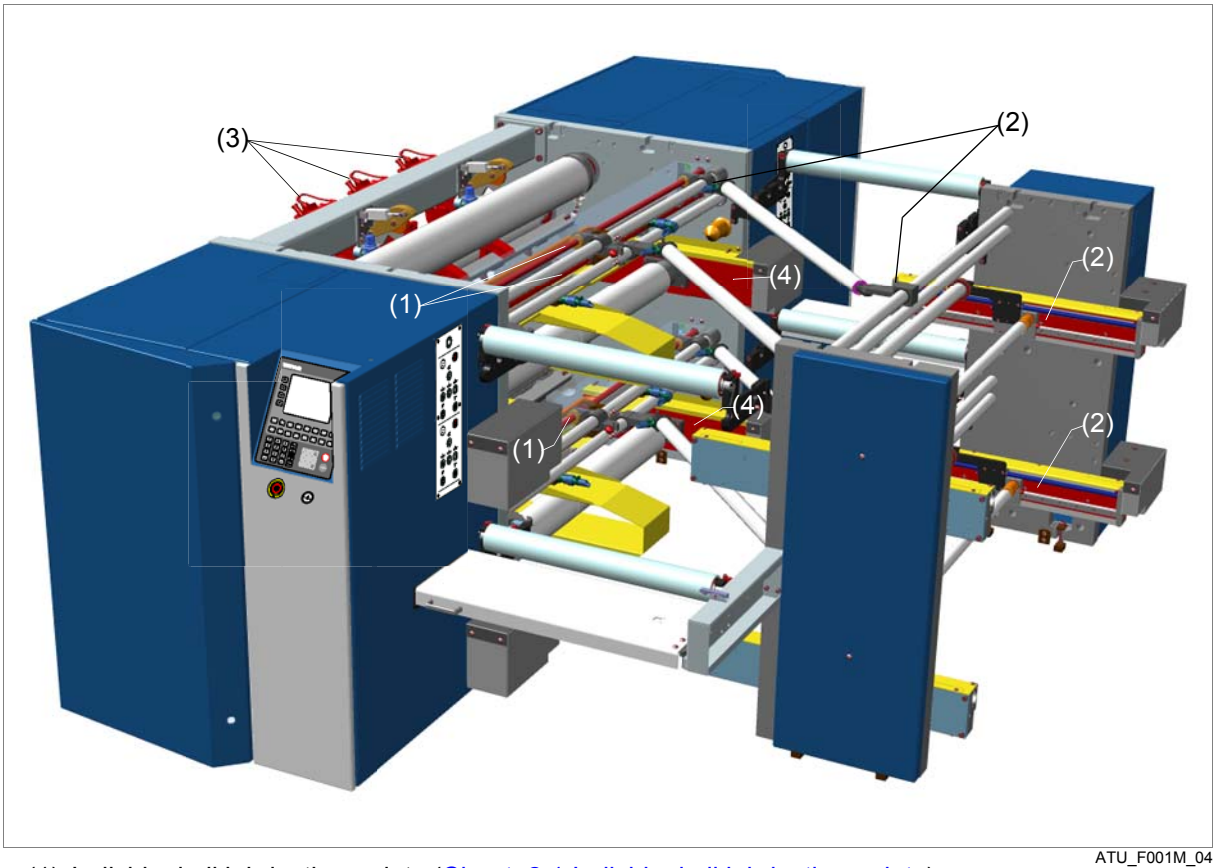

ATU_F001M_04

(1) Individual oil lubrication points (Chapt. 2.1 Individual oil lubrication points)
(2) Individual grease-lubrication points (Chapt. 2.2 Individual grease lubrication points)
(3) Cutter (Chapt. 2.4 Cutter)
(4) Ribbon register linear guides (Chapt. 2.5 Ribbon register linear guides)

1.2 General safety information

DANGER	**Danger!** **Danger of explosion** due to toxic and explosive vapors! => Keep stocks of lubricants in a fireproof, lockable room. => Keep stocks of lubricants in clean containers that can be securely closed. => Comply with the local statutory regulations for work safety.

CAUTION	**Machine damage!** Damage of the **lubrication points** due to improper use of lubricants! => Use only lubricants recommended by WIFAG. => Never mix lubricants. => Clearly mark containers.

CAUTION	**Machine damage!** Damage to the **system** due to impure lubricant! => Always keep equipment such as oil cans, pumps and funnels in a clean and serviceable condition. => Reseal oil cans, pumps and containers after filling.

CAUTION	**Machine damage!** Damage to the **individual lubrication points** due to improper operation! => Clean lubrication points before and after lubrication service. => Comply with the lubrication instructions.

CAUTION	**Machine damage!** Damage to the **lubrication points** due to malfunctioning in the lubrication cycle! => Even the most minor faults must be rectified immediately.

WARNING	**Risk of injury!** **Environmental pollution** due to improperly disposed of lubricants! => Comply with the local statutory regulations.

1.3 Lubricant properties

Tab. 1 Lubricant properties (v 1.7 / 03.02.09)

WIFAG ID No.	Area of application	Properties
1	Gearbox with circulation or oil-bath lubrication	Paraffin-base mineral oil with oxidation and corrosion inhibitors, anti-foaming additives and good de-emulsification properties in accordance with DIN 51 517 / 3: CLP 68 or DIN 51 524 / 2: HLP 68
2	Centralized lubrication and general oil lubrication	Slideway oil with good adhesion properties, oxidation and corrosion inhibitors and high wear protection in accordance with DIN 51 502: CGLP 68
3	Centralized lubrication and general grease lubrication (autopaster)	Lithium soap grease with EP additives, good corrosion and wear protection, high heat resistance and good resistance to cold and warm water in accordance with DIN 51 825 / 3: KP2K
4	Bearer ring lubrication in Unité d'impression	Polyglycol-base synthetic lubricating oil with extremely good wear protection in compliance with DIN 51 502: CLP PG 220 **Caution!** Polyglycol-base oils must not be mixed with synthetic oils or mineral oils!
5	Impression throw-on in printing unit; clamping elements in autopasters (PR2.2/C, PR2/C, O, P)	Long life and high pressure grease **STABURAGS NBU 12 ALTEMP** from the lubricant supplier KLÜBER LUBRICATION. **Caution!** Experience acquired by WIFAG has shown that only **STABURAGS NBU 12 ALTEMP** is suitable for the specified area of application!
6	Plate tensioning devices and bare machine parts	High-grade corrosion protection, fast-acting and good penetration properties. Produces a very thin anti-corrosive film with a flash point of > 25° °C. **Caution!** Solvent-containing products are a fire hazard! Use solvent-free products if possible!
7	Centralized lubrication and general grease lubrication in autopasters (PR2.2/C; PR2/C, O, P)	Low viscosity gearbox grease with EP properties according to DIN 51 826: G 00 G **Caution!** Products in row 7 must not be mixed with each other!
8	Open gears (gearwheels, chains, threaded spindles)	Gearwheel lubricant according to DIN 51 502: OG 2 K; produces a pliant, water-resistant lubricant film with good adhesive properties. Or chain and adhesion oil spray.

1.4 Lubricant overview

Tab. 2 Lubricants recommended by lubricant suppliers (v 1.7 / 03.02.09) lists lubricant examples from international brands. You can use other brands, however, if desired. The lubricant supplier takes responsibility for guaranteeing that the prescribed lubricant specifications are complied to in accordance with Tab. 1 Lubricant properties (v 1.7 / 03.02.09).

Tab. 2 Lubricants recommended by lubricant suppliers (v 1.7 / 03.02.09)

WIFAG ID No.	bp	Castrol	Mobil	
1	ENERGOL HLP-HM68	OPTIGEAR 68	MOBIL DTE 26	OMALA OIL68
2	MACCURAT D 68	OPTIGEAR 68	MOBIL VACTRA No. 2	TONNA S 68
3	ENERGREASE LS-EP 2	LONGTIME PD 2	MOBILUX EP 2	ALVANIA EPLF 2
4	ENERSYN SG-XP 220	TRIBOL 800/220	MOBIL GLYGOYLE 30	TIVELA S 220
5	----------	----------	----------	----------
6	----------	----------	MOBILARMA 778	ENSIS DW
7	ENERGREASE LS-EP 00	LONGTIME PD 00	MOBILUX EP 004	ALVANIA GL 00
8	----------	VISCOGEN KL 300 SPRAY	MOBILGEAR OGL 007 AEROSOL	MALLEUS HDX
WIFAG ID No.	**KLÜBER LUBRICATION**	**Blaser. SWISSLUBE**		
1	KLÜBER-OIL GEM 1-68 N	Hydraulic + industrial oil 68, Art. 159		
2	LAMORA D 68	Slideway oil 68, Art. 743		
3	MICROLUBE GL 261	Blasolube 472, Art. 472		
4	SYNTHESO D 220 EP	Synth. gear oil PG 220, Art. 27251		
5	STABURAGS NBU 12 ALTEMP	----------		
6	KLÜBERSYNTH MZ 4-17	Anti-corrosive fluid, Art. 131		
7	MICROLUBE GB 00	Blasolube 371, Art. 371		
8	POLYLUB HVT-50 A SPRAY	Foodtec SAS 100, Art. 681		

1.5 Special lubricants and preservatives

Tab. 3 Special lubricants and preservatives (v 1.7 / 03.02.09)

Area of application	Products recommended by WIFAG
Assembly of components with close tolerance fittings	**Pressure resistant assembly** • Tunap Tunpas WP • Castrol Paste White T
Unité d'impression • Seals for electrical NC roller bearing • Bearing / thread of the ink keys • Ink knife bar covers • Plate tensioning device	**Water-resistant multipurpose grease** • Shell Rhodina SD2 (former name Aseol Aquares EP 810-60)
Unité d'impression • Ink separators • Column at the ink knife	**Multipurpose grease** • Blasolube 540, Art. 540 • BP Energrease LS 3 • Klüber Centoplex 3 • Shell Alvania EPLF 2 • Mobilgrease XHP 103 • Mobilith SHC PM 460 • Castrol Olit 2 EP
Folder • Draw roller drive gearwheels (only small amounts necessary when replacing the gearwheels!)	**Long-life lubricating grease** • Klüber Isoflex Topas NB5051
Unité d'impression • Inner sides of wall (dampening unit area)	**Anti-seize spray / corrosion prevention** • Metaflux 70-81
Unité d'impression • Counterpressure cylinder drive shaft	**Lubricating grease / corrosion prevention / rust solvent / cleaner** • WD-40 • Klüber Quietsch-Ex • Shell Ensis DW 1255 • Blasolube Foodtec SAS 100 Art. 681
Feed-in device • Feed-in chain **Folder** • Pressing rails (only for knife box)	**Teflon-base lubricant** • Klüber Fluoropan T 20 Spray • Rhodia Rhodorsil 4 x Spray • Blaser Rocol Teflon spray, Art. 651
Dérouleur • Center drive tensioning set • Draw roller drive tensioning set **Angle-bar and draw roller module** • Draw roller drive tensioning set	**Heavy duty grease** • Molykote BR 2

2 Construction and function

Contents

This chapter contains the following information:

- Chapt. 2.1 Individual oil lubrication points
- Chapt. 2.2 Individual grease lubrication points
- Chapt. 2.3 Lubricated for life lubrication points
- Chapt. 2.4 Cutter
- Chapt. 2.5 Ribbon register linear guides

2.1 Individual oil lubrication points

Individual oil lubrication points are individual consumer points such as open drives and bearings. These are easy to access, run at low loads and speeds or are only occasionally operated by hand.
Individual oil lubrication points are connected to no system and are manually lubricated using an oil can or a spray can.

Lubrication intervals according to Chapt. 5.1 Lubricate individual oil lubrication points.

2.2 Individual grease lubrication points

Individual oil lubrication points are individual consumer points such as e.g. open drives and bearings. These are easy to access, run at low loads and speeds or are only occasionally operated by hand.
Individual grease-lubrication points are not connected to any system and are manually lubricated using a portable grease gun or a hand-operated grease gun.

Lubrication intervals according to Chapt. 5.2 Lubricate individual grease lubrication points.

2.3 Lubricated for life lubrication points

The following elements are lubricated for life:

- Elements that are not listed in Chapt. 1.1 Lubrication systems.

2.4 Cutter

Note

Full information about lubricants and maintenance activities on the cutter are described by the manufacturer and can be found in the *Suppliers' documentation* file.

2.5 Ribbon register linear guides

Note

Full information about lubricants and maintenance activities on the linear guides of the ribbon register (Fig. 2) are described by the manufacturer and can be found in the *Suppliers' documentation* file.

Fig. 2 Ribbon register

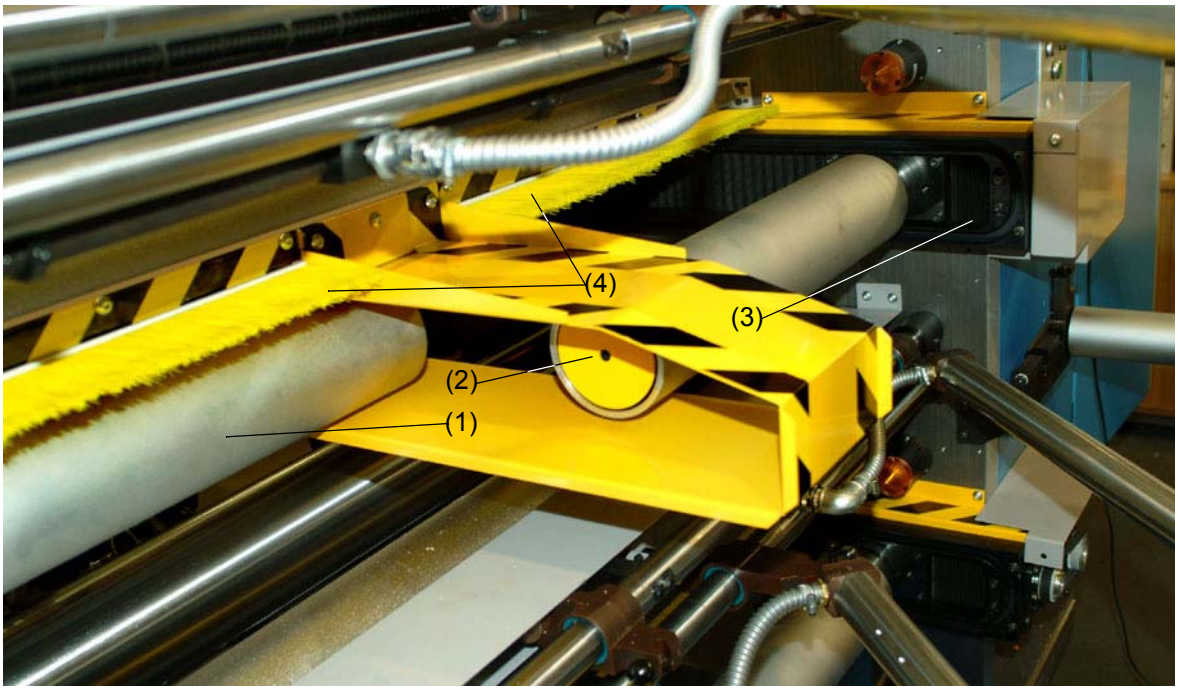

ATU_147_008_01

(1) Ribbon register of side I
(2) Ribbon register of side II
(3) Linear guides
(4) Protective brush

3 Replace components

Note

No replacement work is necessary on this sub-function group.

4 Basic settings

4.1 Setting

Note

No settings are necessary on this sub-function group.

4.2 Calibration

Note

No calibrations are necessary on this sub-function group.

4.3 Testing

Note

No tests are necessary on this sub-function group.

5 Lubrication instructions

Contents

This chapter contains the following information:

- Chapt. 5.1 Lubricate individual oil lubrication points
- Chapt. 5.2 Lubricate individual grease lubrication points

5.1 Lubricate individual oil lubrication points

Requirements

- Handle lubricants in accordance with the general directives (Chapt. 1.2 General safety information)

Materials needed

- Warning sign *Work is in progress!*
- Soft cloth
- Oil No. 2

DANGER	**Danger!** **Operation** of the function group by others! => Electrically disable function group (actuate pushbutton *SAFE-STOP*). => Place Work in progress! warning signs on the corre-sponding terminals and control panels. => Before entering each command at a terminal or control panel, make certain that nobody is in the danger zone.

Lubrication intervals

The following guide values apply to the lubrication intervals:

- Weekly or max. 65 operating hours
- Monthly or max. 250 operating hours
- Every six months or max. 1,500 operating hours
- Annually or max. 3,000 operating hours

Tab. 4 Overview of lubrication work for individual oil lubrication points

Lubrication points	Lubrication specification	Lubricant identification number	Interval
Angle-bar system Adjustment spindle (Fig. 3)	Apply some splashes to adjustment spindle	Oil No. 2	Weekly

Fig. 3 Adjustment spindle

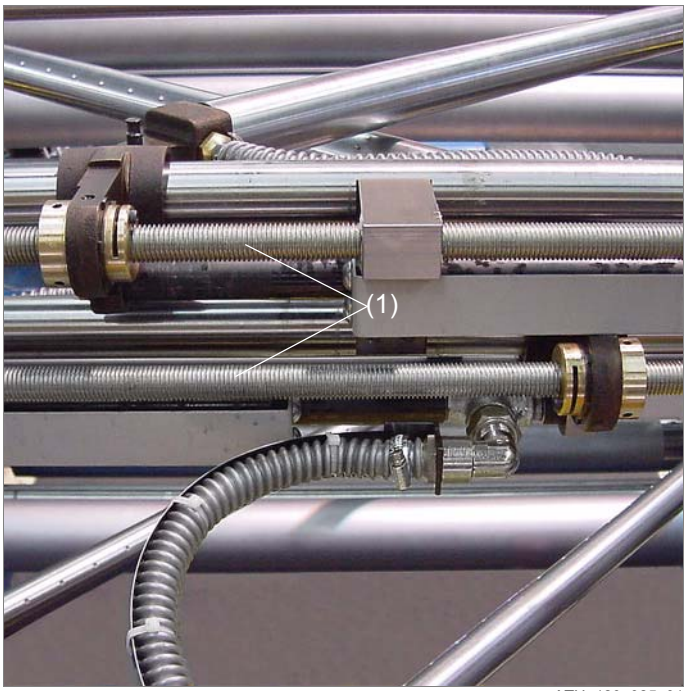

ATU_129_025_01

(1) Lubrication point: Oil No. 2

5.2 Lubricate individual grease lubrication points

Requirements

- Handle lubricants in accordance with the general directives (Chapt. 1.2 General safety information)

Materials needed

- Warning sign *Work is in progress!*
- Soft cloth
- Portable pump with grease No. 3 (Chapt. 1.3 Lubricant properties; Chapt. 1.4 Lubricant overview)

DANGER	**Danger!** **Operation** of the function group by others! => Electrically disable function group (actuate pushbutton *SAFE-STOP*). => Place Work in progress! warning signs on the corresponding terminals and control panels. => Before entering each command at a terminal or control panel, make certain that nobody is in the danger zone.

Lubrication intervals

The following guide values apply to the lubrication intervals:

- Weekly or max. 65 operating hours
- Monthly or max. 250 operating hours
- Every six months or max. 1,500 operating hours
- Annually or max. 3,000 operating hours

Tab. 5 Overview of lubrication work for individual grease lubrication points

Lubrication points	Lubrication specification	Lubricant identification number	Interval
Angle bar linear guides (Fig. 4)	1 to 2 grease-gun shots	Grease No. 3	Weekly
Secondary register side I • Linear guide (Fig. 5)	3 to 4 grease-gun shots	Grease No. 3	Monthly
Secondary register side II • Ballscrew spindle (Fig. 6)	3 to 4 grease-gun shots	Grease No. 3	Monthly
Secondary register side II • Linear guide (Fig. 6)	3 to 4 grease-gun shots	Grease No. 3	Monthly

Fig. 4 Angle bar linear guides

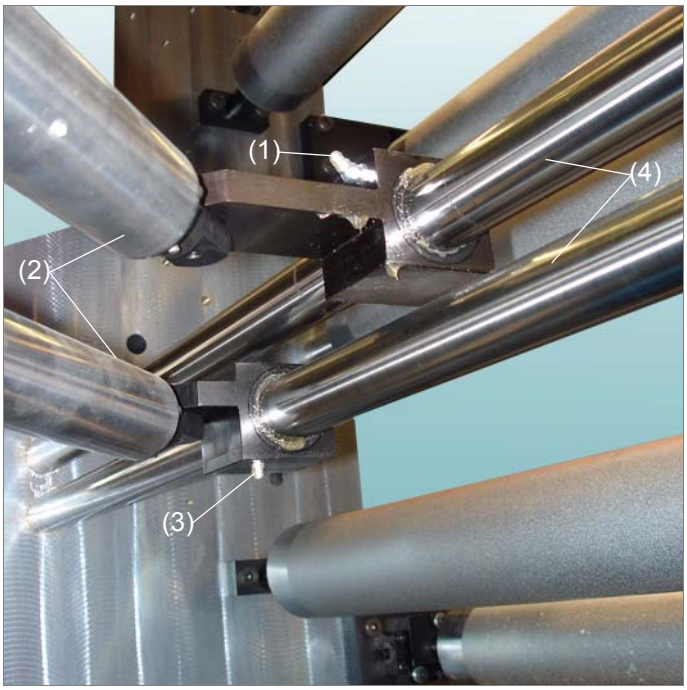

ATU_199_001_01

(1) Angle bar grease nipple above: Grease No. 3
(2) Angle bars
(3) Angle bar grease nipple below: Grease No. 3
(4) Crossbeams

Fig. 5 Secondary register side I

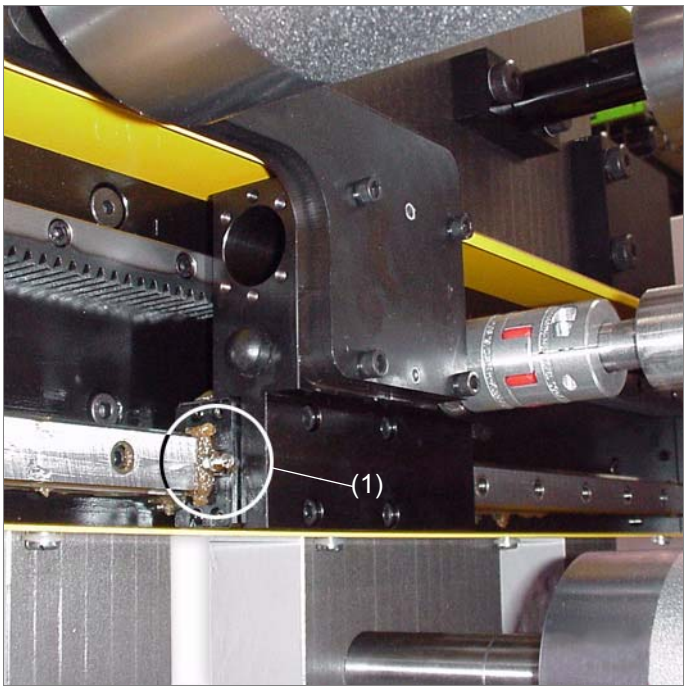

ATU_129_027_01

(1) Linear guide side I: Grease No. 3

Fig. 6 Secondary register side II

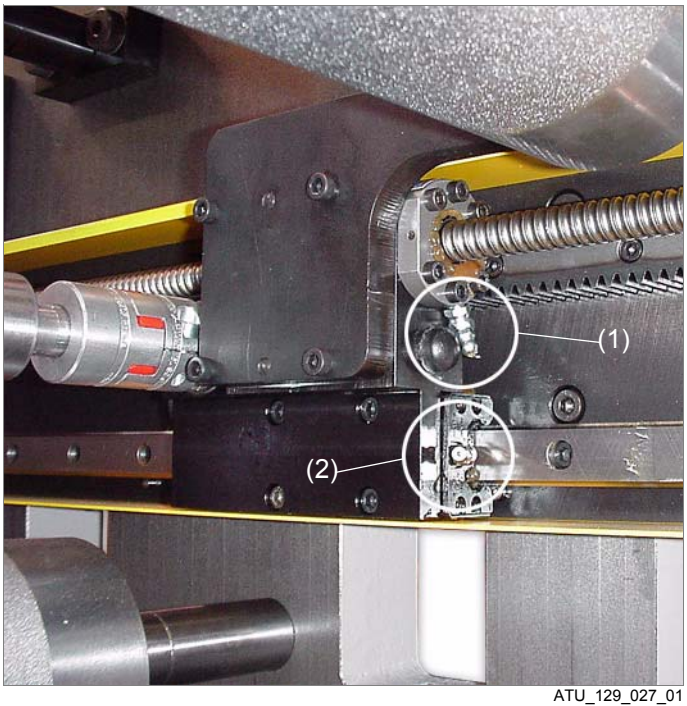

ATU_129_027_01

(1) Ballscrew spindle: Grease No. 3
(2) Linear guide side II: Grease No. 3

6 Maintenance

1 Information and regulations 6.3
2 Maintenance intervals 6.4
3 Maintenance schedules 6.5
3.1 Maintenance schedules of the entire installation 6.5
3.2 Daily maintenance schedule 6.6
3.3 Weekly maintenance schedule 6.7
3.4 Monthly maintenance schedule 6.8
3.5 Biannual maintenance schedule 6.9
3.6 Annual maintenance schedule 6.10
3.7 Maintenance schedule at special intervals 6.11
3.8 Maintenance schedule for suppliers' components 6.12
4 Maintenance activities 6.13
4.1 Dry clean reflected light sensors 6.14
4.2 Cleaning the draw rollers 6.15
4.3 Remove ink and paper dust 6.16
4.4 Clean reflected light sensor with optical cleaner 6.17
4.5 Cleaning the angle bars 6.18
4.6 Check pressure rollers 6.20
4.7 Clean linear guides and ball screw spindles 6.22
4.8 Maintenance activities on the ribbon register 6.24
4.9 Cleaning adjustment spindle for angle bars 6.25
4.10 Clean crossbeam guides for angle bars 6.27
4.11 Check pneumatic system 6.29
4.12 Measuring and setting timing belt tensions 6.30
4.13 Maintenance activities on the shear cut cutting holder 6.36
4.14 Maintenance activities on the lower cutter 6.36
4.15 Maintenance activities on the duct compressor 6.37
4.16 Maintenance activities on the vacuum cleaner 6.39

1 Information and regulations

The system must be checked regularly for the following reasons:
- so that the system remains operationally safe
- so that the system has long service life
- so that a uniform and high printing quality can be achieved

Contents

The maintenance instructions consist of the following three parts:

- Time of the maintenance activities in Chapt. 2 Maintenance intervals
- Summary of the maintenance activities in Chapt. 3 Maintenance schedules
- Description of the maintenance activities in Chapt. 4 Maintenance activities

Specification

The following points must be strictly complied with:
- The maintenance activities may be carried out only by qualified personnel!
- Observe the danger zones during all work and carry out the described measures!
- Perform all work in the prescribed maintenance intervals!
- Use only the listed cleaning and washing agents!
- Use only the listed lubricants!

2 Maintenance intervals

The maintenance activities must be performed in the following intervals:

- Daily or after max. 15 operation hours
- Weekly or after max. 65 operation hours
- Monthly or after max. 250 operation hours
- Biannually or after max. 1500 operation hours
- Annually or after max. 3000 operation hours

3 Maintenance schedules

Contents

This chapter contains the following information:

- Chapt. 3.1 Maintenance schedules of the entire installation
- Chapt. 3.2 Daily maintenance schedule
- Chapt. 3.3 Weekly maintenance schedule
- Chapt. 3.4 Monthly maintenance schedule
- Chapt. 3.5 Biannual maintenance schedule
- Chapt. 3.6 Annual maintenance schedule
- Chapt. 3.7 Maintenance schedule at special intervals
- Chapt. 3.8 Maintenance schedule for suppliers' components

Note

The maintenance schedules refer only to the angle-bar module function group.

3.1 Maintenance schedules of the entire installation

Note

The maintenance schedules of the entire installation are found in the following indexes:

- Reg. 6 Maintenance in the *System* file

3.2 Daily maintenance schedule

Tab. 1 Daily maintenance schedule

Maintenance activities	Performed by	Date and name
Cleaning and conservation work		
Chapt. 4.1 Dry clean reflected light sensors	Auxiliary personnel	
Chapt. 4.2 Cleaning the draw rollers	Auxiliary personnel	
Inspection and replenishing work		
None	----------	----------
Inspection and replacement work		
None	----------	----------
Inspection and adjustment work		
None	----------	----------

3.3 Weekly maintenance schedule

Tab. 2 Weekly maintenance schedule

Maintenance activities	Performed by	Date and name
Cleaning and conservation work		
Chapt. 4.3 Remove ink and paper dust	Auxiliary personnel	
Chapt. 4.4 Clean reflected light sensor with optical cleaner	Auxiliary personnel	
Chapt. 4.5 Cleaning the angle bars	Auxiliary personnel	
Inspection and replenishing work		
None	----------	----------
Inspection and replacement work		
Chapt. 4.6 Check pressure rollers	Mechanics	
Inspection and adjustment work		
None	----------	----------

3.4 Monthly maintenance schedule

Tab. 3 Monthly maintenance schedule

Maintenance activities	Performed by	Date and name
Cleaning and conservation work		
Chapt. 4.7 Clean linear guides and ball screw spindles	Mechanics / Auxiliary personnel	
Chapt. 4.9 Cleaning adjustment spindle for angle bars	Mechanics / Auxiliary personnel	
Chapt. 4.10 Clean crossbeam guides for angle bars	Mechanics / Auxiliary personnel	
Inspection and replenishing work		
None	----------	----------
Inspection and replacement work		
None	----------	----------
Inspection and adjustment work		
None	----------	----------

3.5 Biannual maintenance schedule

Tab. 4 Biannual maintenance schedule

Maintenance activities	Performed by	Date and name
Cleaning and conservation work		
None	----------	----------
Inspection and replenishing work		
None	----------	----------
Inspection and replacement work		
Chapt. 4.11 Check pneumatic system	Mechanics	
Inspection and adjustment work		
Chapt. 4.12 Measuring and setting timing belt tensions	Mechanics	

3.6 Annual maintenance schedule

Tab. 5 Annual maintenance schedule

Maintenance activities	Performed by	Date and name
Cleaning and conservation work		
None	----------	----------
Inspection and replenishing work		
None	----------	----------
Inspection and replacement work		
None	----------	----------
Inspection and adjustment work		
None	----------	----------

3.7 Maintenance schedule at special intervals

Tab. 6 Maintenance schedule at special intervals

Maintenance activities / interval	Performed by	Date and name
Cleaning and conservation work		
None	----------	----------
Inspection and replenishing work		
None	----------	----------
Inspection and replacement work		
None	----------	----------
Inspection and adjustment work		
None	----------	----------

3.8 Maintenance schedule for suppliers' components

Tab. 7 Maintenance schedule for suppliers' components

Component / Location	Performed by	Date and name
Ribbon register • Chapt. 4.8 Maintenance activities on the ribbon register	Mechanics / Auxiliary personnel	
Shear cut cutting holder on cutting unit • Chapt. 4.13 Maintenance activities on the shear cut cutting holder	Mechanics	
Lower knife on cutting unit • Chapt. 4.14 Maintenance activities on the lower cutter	Mechanics	
duct fan compressor • Chapt. 4.15 Maintenance activities on the duct compressor	Mechanics	
Dust extractor • Chapt. 4.16 Maintenance activities on the vacuum cleaner	Mechanics	

4 Maintenance activities

Contents

This chapter contains the following information:

Daily maintenance work

- Chapt. 4.1 Dry clean reflected light sensors
- Chapt. 4.2 Cleaning the draw rollers

Weekly maintenance activities

- Chapt. 4.3 Remove ink and paper dust
- Chapt. 4.4 Clean reflected light sensor with optical cleaner
- Chapt. 4.5 Cleaning the angle bars
- Chapt. 4.6 Check pressure rollers

Monthly maintenance work

- Chapt. 4.7 Clean linear guides and ball screw spindles
- Chapt. 4.9 Cleaning adjustment spindle for angle bars
- Chapt. 4.10 Clean crossbeam guides for angle bars

Biannual maintenance activities

- Chapt. 4.11 Check pneumatic system
- Chapt. 4.12 Measuring and setting timing belt tensions

Yearly maintenance activities

- None

Maintenance activities with special intervals

- None

Maintenance activities on suppliers' components

- Chapt. 4.8 Maintenance activities on the ribbon register
- Chapt. 4.13 Maintenance activities on the shear cut cutting holder
- Chapt. 4.14 Maintenance activities on the lower cutter
- Chapt. 4.15 Maintenance activities on the duct compressor
- Chapt. 4.16 Maintenance activities on the vacuum cleaner

4.1 Dry clean reflected light sensors

Requirements

- Production group / function group at standstill

Materials needed

- Warning sign *Work is in progress!*
- Protective rubber gloves
- Soft cloth

⚠ WARNING	**Risk of injury!** **Risk of being trapped and crushed** by rotating rollers! => Electrically disable function group (actuate pushbutton *SAFE-STOP*). => Place *Work in progress!* warning signs on the corresponding terminals and control panels.

1. Dry clean reflected light sensors (1) for web monitoring with a soft cloth (Fig. 1).
2. Electrically enable angle-bar module via *SAFE-STOP* pushbutton.
3. Remove *Work is in progress!* warning signs.

Fig. 1 Cleaning the reflected light sensors

ATU_129_028_01

(1) Reflected light sensor

4.2 Cleaning the draw rollers

Requirements

- Production group / function group at standstill

Materials needed

- Warning signs *Work is in progress!*
- Soft cloth
- Cleaning agents approved by WIFAG
- Resistant rubber gloves
- Protective mask

⚠ WARNING	**Risk of injury!** **Risk of being trapped and crushed** by rotating rollers! => Electrically disable function group (actuate pushbutton *SAFE-STOP*). => Place *Work in progress!* warning signs on the corresponding terminals and control panels.

⚠ CAUTION	**Machine damage!** Damage to the **system** due to corrosion! => Use only cleaning agents approved by WIFAG. => Mix the cleaning agent according to the instructions of the supplier. => Never use pure water for preliminary and after-washing.

1. Apply cleaning solution sparingly to the draw rollers.
2. Clean draw rollers with a soft cloth.
3. Wipe draw rollers dry.
4. Electrically enable function group with the *SAFE-STOP* pushbutton.
5. Remove *Work is in progress!* warning signs.

4.3 Remove ink and paper dust

Requirements

- Production group / function group at standstill

Materials needed

- Warning signs *Work is in progress!*
- Soft cloth
- Cleaning agents approved by WIFAG
- Resistant rubber gloves
- Protective mask

WARNING	**Risk of injury!** **Risk of being trapped and crushed** by rotating rollers! => Electrically disable function group (actuate pushbutton *SAFE-STOP*). => Place *Work in progress!* warning signs on the corresponding terminals and control panels.

CAUTION	**Machine damage!** Damage to the **system** due to corrosion! => Use only cleaning agents approved by WIFAG. => Mix the cleaning agent according to the instructions of the supplier. => Never use pure water for preliminary and after-washing.

1. Remove ink and paper dust in the angle-bar module.
2. Electrically enable function group with the *SAFE-STOP* pushbutton.
3. Remove *Work is in progress!* warning signs.

4.4 Clean reflected light sensor with optical cleaner

Requirements

- Production group / function group at standstill

Materials needed

- Warning sign *Work is in progress!*
- Protective rubber gloves
- Soft cloth
- Optical cleaner

WARNING	**Risk of injury!** **Risk of being trapped and crushed** by rotating rollers! => Electrically disable function group (actuate pushbutton *SAFE-STOP*). => Place *Work in progress!* warning signs on the corre-sponding terminals and control panels.

CAUTION	**Machine damage!** Material damage to **component** by aggressive cleaning agents! => Do not use any cleaning agents containing cellulose thinner and similar products for cleaning.

1. Spray reflected light sensors (1) for web monitoring with optical cleaner and rub dry with a soft cloth (Fig. 1).
2. Electrically enable angle-bar module via *SAFE-STOP* pushbutton.
3. Remove *Work is in progress!* warning signs.

4.5 Cleaning the angle bars

Requirements

- Production group / function group at standstill

Materials needed

- Warning sign *Work is in progress!*
- Protective rubber gloves
- Soft cloth
- Cleaning agent

DANGER	**Danger!** **Operation** of the function group by others! => Electrically disable function group (actuate pushbutton *SAFE-STOP*). => Place Work in progress! warning signs on the corre-sponding terminals and control panels. => Before entering each command at a terminal or control panel, make certain that nobody is in the danger zone.

CAUTION	**Machine damage!** Material damage to **component** by aggressive cleaning agents! => Do not use any cleaning agents containing cellulose thinner and similar products for cleaning.

1. Remove ink residues on angle bars (1) with cleaning agent (Fig. 2).
2. Clean blow air holes plugged up with ink residues.
3. Rub angle bars dry with a cloth.
4. Electrically enable angle-bar module via *SAFE-STOP* pushbutton.
5. Remove *Work is in progress!* warning signs.

Fig. 2 Cleaning the angle bars

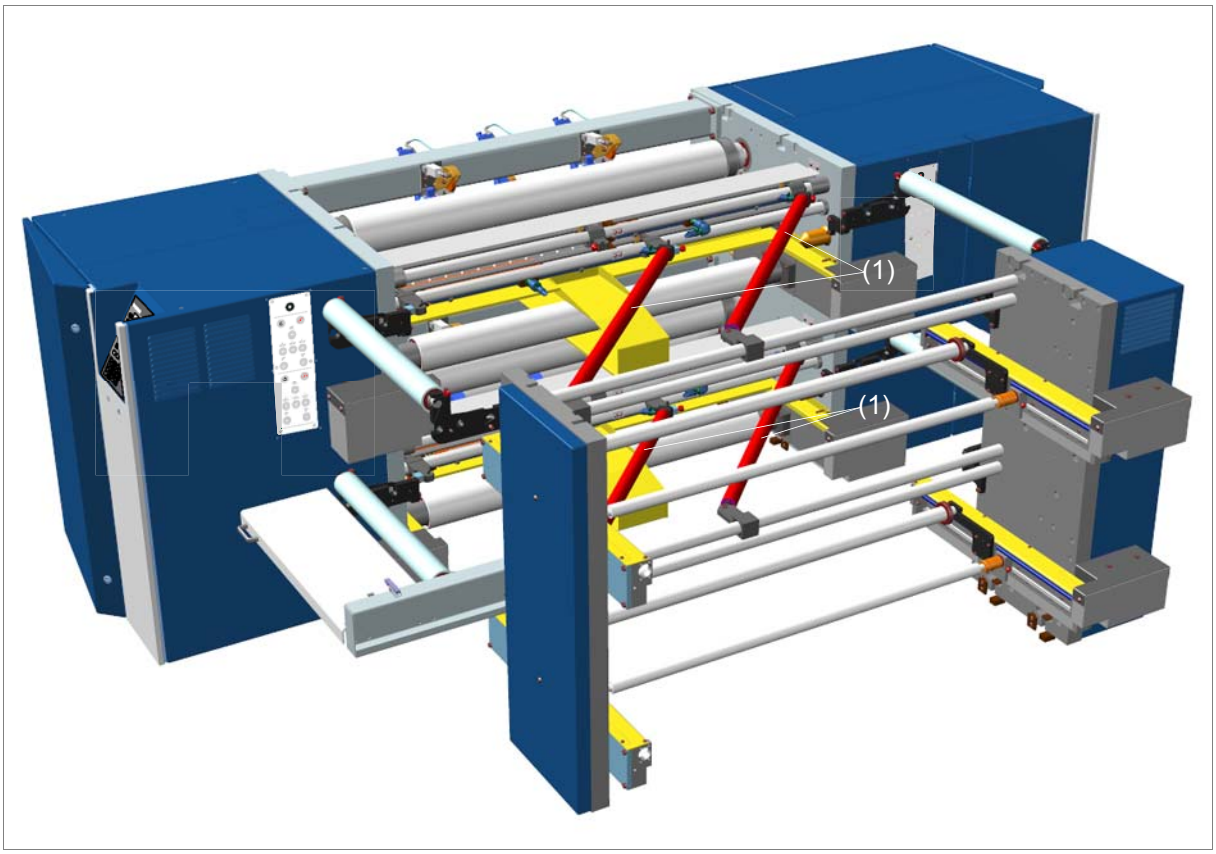

ATU_G001M_01

(1) Angle bars

4.6 Check pressure rollers

Requirements

- Production group / function group at standstill

Materials needed

- Warning sign *Work is in progress!*
- Allen key set

WARNING	**Risk of injury!** **Risk of crushing** by throwon movement of the pressure rollers! => Electrically disable function group at the nearest control panel with pushbutton *SAFE-STOP*. => Place *Work in progress!* warning signs on the corresponding terminals and control panels. => Exercise caution when working with the pressure rollers.

Note

Operation according to Chapt. 2.2 Overview of pushbuttons and commands in Reg. 3 Control elements.

1. Throw off pressure roller (1) from the draw roller (2) (Fig. 3).
2. Check each pressure roller (1) for damage locations and wear and replace if necessary according to Chapt. 3.2 Replace pressure roller in Reg. 9 Draw roller and cutting unit.
3. Electrically enable angle-bar module via *SAFE-STOP* pushbutton.
4. Remove *Work is in progress!* warning signs.

Fig. 3 Pressure roller

WE_164_002_01

(1) Pressure roller
(2) Draw roller

4.7 Clean linear guides and ball screw spindles

Requirements

- Production group / function group at standstill

Materials needed

- Warning sign *Work is in progress!*
- Protective rubber gloves
- Soft cloth
- Cleaning agent

DANGER	**Danger!** **Operation** of the function group by others! => Electrically disable function group (actuate pushbutton *SAFE-STOP*). => Place Work in progress! warning signs on the corresponding terminals and control panels. => Before entering each command at a terminal or control panel, make certain that nobody is in the danger zone.

1. Clean linear guides (1) and ball screw spindles (2) with a soft cloth and cleaning agent.
2. Electrically enable angle-bar module via *SAFE-STOP* pushbutton.
3. Move dolly by at least the width of the dolly (Chapt. 10.2 Referencing / positioning in Reg. 4 Operation).
4. Electrically disable function group at the nearest control panel with pushbutton *SAFE-STOP*.
5. Clean accessible places on the linear guides (1) and ball screw spindles (2).
6. Lubricate linear guides (1) and ball screw spindles (2) (Chapt. 5.2 Lubricate individual grease lubrication points in Reg. 5 Lubrication).
7. Electrically enable angle-bar module via *SAFE-STOP* pushbutton.
8. Remove *Work is in progress!* warning signs.

Fig. 4 Secondary register maintenance

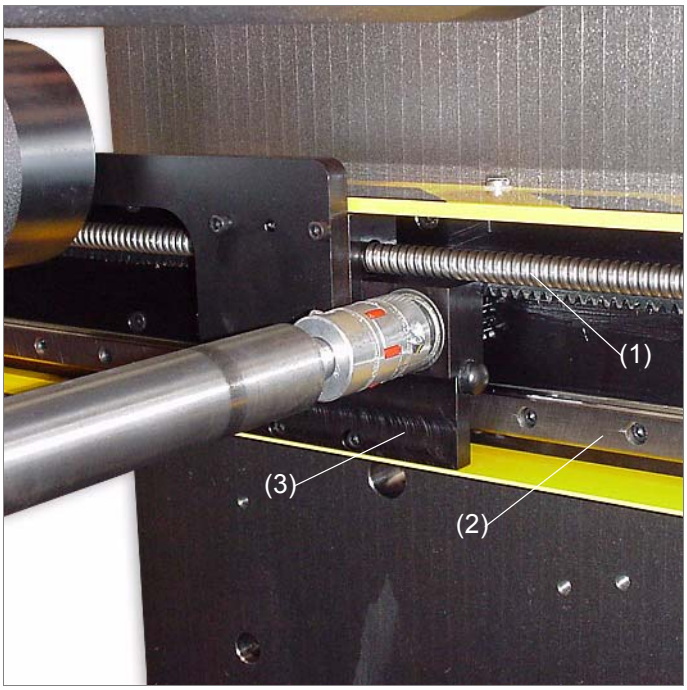

ATU_129_029_01

(1) Ballscrew spindle
(2) Linear guide
(3) Dolly

4.8 Maintenance activities on the ribbon register

Requirements

- Production group / function group at standstill

Materials needed

- Warning sign *Work is in progress!*
- Protective rubber gloves
- Soft cloth
- Cleaning agent

DANGER	**Danger!** **Operation** of the function group by others! => Electrically disable function group (actuate pushbutton *SAFE-STOP*). => Place Work in progress! warning signs on the corre-sponding terminals and control panels. => Before entering each command at a terminal or control panel, make certain that nobody is in the danger zone.

1. Carry out maintenance activities in accordance with the manufacturer's documen-tation.
2. Electrically enable function group with the *SAFE-STOP* pushbutton.
3. Remove *Work is in progress!* warning sign.

4.9 Cleaning adjustment spindle for angle bars

Requirements

- Production group / function group at standstill

Materials needed

- Warning sign *Work is in progress!*
- Protective rubber gloves
- Soft cloth
- Cleaning agent

DANGER	**Danger!** **Operation** of the function group by others! => Electrically disable function group (actuate pushbutton *SAFE-STOP*). => Place Work in progress! warning signs on the corresponding terminals and control panels. => Before entering each command at a terminal or control panel, make certain that nobody is in the danger zone.

1. Clean adjustment spindle (2), (4) with a soft cloth and cleaning agent (Fig. 5).
2. Electrically enable angle-bar module via *SAFE-STOP* pushbutton.
3. Move angle bar by at least the holder width (1), (3) (Chapt. 7.4 Referencing / positioning in Reg. 4 Operation).
4. Electrically disable function group at the nearest control panel with pushbutton *SAFE-STOP*.
5. Clean accessible places on the adjustment spindles.
6. Lubricate adjustment spindle (Chapt. 2.1 Individual oil lubrication points in Reg. 5 Lubrication).
7. Electrically enable angle-bar module via *SAFE-STOP* pushbutton.
8. Remove *Work is in progress!* warning signs.

Fig. 5 Angle bar adjustment spindles

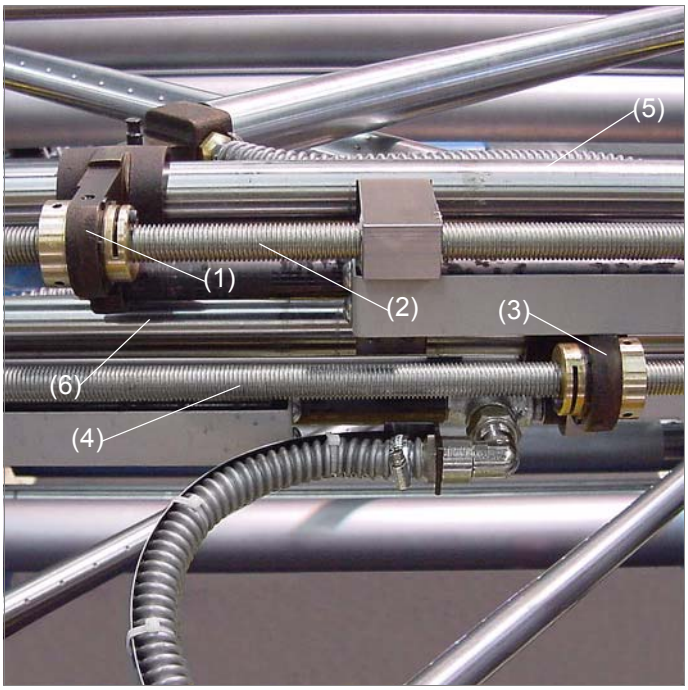

ATU_129_025_01

(1) Holder for leading angle bar
(2) Adjustment spindle for leading angle bar
(3) Holder for trailing angle bar
(4) Adjustment spindle for trailing angle bar
(5) Crossbeam guide for leading angle bar
(6) Crossbeam guide for trailing angle bar

4.10 Clean crossbeam guides for angle bars

Requirements

- Production group / function group at standstill

Materials needed

- Warning sign *Work is in progress!*
- Protective rubber gloves
- Soft cloth
- Cleaning agent

DANGER	**Danger!** **Operation** of the function group by others! => Electrically disable function group (actuate pushbutton *SAFE-STOP*). => Place Work in progress! warning signs on the corresponding terminals and control panels. => Before entering each command at a terminal or control panel, make certain that nobody is in the danger zone.

1. Clean crossbeam guides (2) (3) with a soft cloth and cleaning agent (Fig. 6).
2. Electrically enable angle-bar module via *SAFE-STOP* pushbutton.
3. Move angle bar (1) by at least the holder width (Chapt. 7.4 Referencing / positioning in Reg. 4 Operation).
4. Electrically disable function group at the nearest control panel with pushbutton *SAFE-STOP*.
5. Clean accessible places on the adjustment spindles (2), (3).
6. Electrically enable angle-bar module via *SAFE-STOP* pushbutton.
7. Remove *Work is in progress!* warning signs.

Fig. 6 Crossbeam guides of angle bars

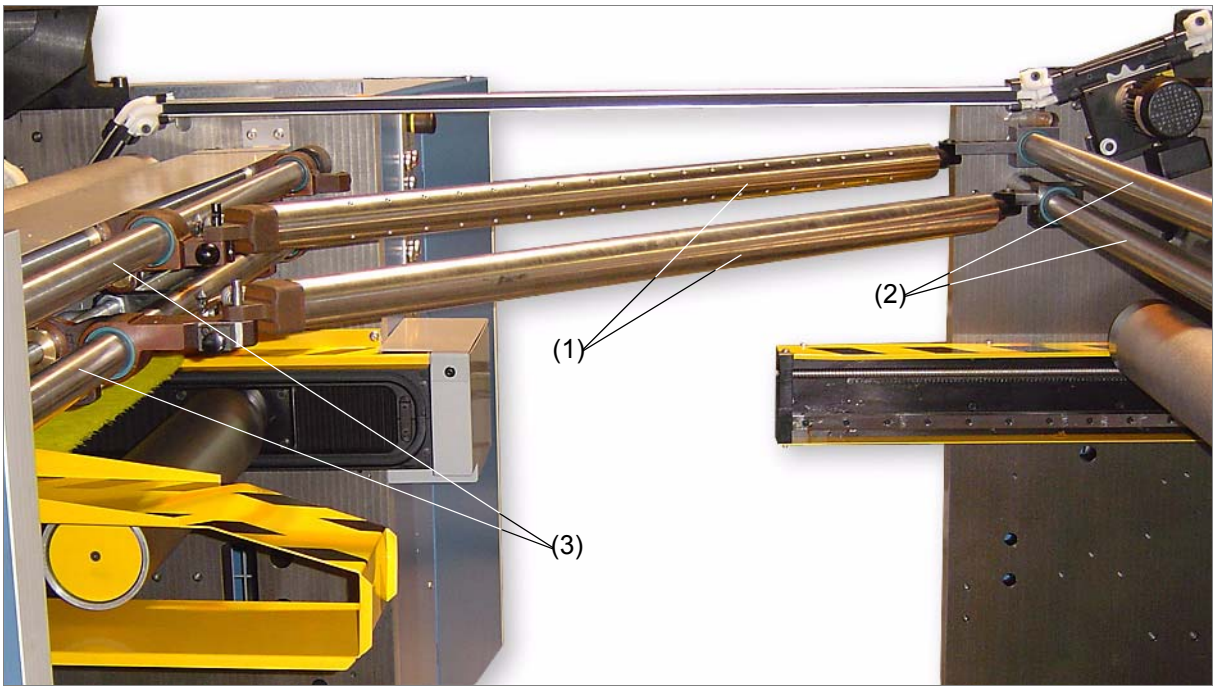

ATU_131_013_01

(1) Angle bars
(2) Crossbeam guides for turning system above, loose angle bar holders
(3) Crossbeam guides for turning system above, driven angle bar holders

4.11 Check pneumatic system

Requirements

- Production group / function group at standstill

Materials needed

- Warning signs *Work is in progress!*
- Pneumatic system schematic (Chapt. 1.3 Pneumatic system schematics in Reg. 8 Pneumatic system)
- Supplied universal key
- Fork wrench
- Leak-finding spray
- Loctite 245

DANGER	**Danger!** **Operation** of the function group by others! => Electrically disable function group (actuate pushbutton *SAFE-STOP*). => Place Work in progress! warning signs on the corre-sponding terminals and control panels. => Before entering each command at a terminal or control panel, make certain that nobody is in the danger zone.

1. Check pneumatic components and lines for leaks.

If leaks are present:

=> Reduce pressure on the concerned filter-regulator-lubricator unit (in the nearest printing unit) to 0 bar (Chapt. 4.1.3 Setting the filter-regulator-lubricator unit in Reg. 8 Pneumatic system in the *System* file).

=> Replace seals on pneumatic components with leaks or, if necessary, replace pneumatic components (Chapt. 3 Replace components in Reg. 8 Pneumatic system in the *System* file).

2. Electrically enable function group with the *SAFE-STOP* pushbutton.
3. Remove *Work is in progress!* warning sign.

4.12 Measuring and setting timing belt tensions

Requirements

- Production group / function group at standstill
- Measurements of the timing belt tension are to be carried out only when the subassembly is in the cold state; i.e. the wall should have an ideal temperature of 20°C in the region of the drive (min. 18°C and max. 30°C).

Materials needed

- Warning sign *Work is in progress!*
- Allen key set
- Fork wrench
- Torque wrench
- Supplied measuring device

DANGER	**Danger!** **Operation** of the function group by others! => Electrically disable function group (actuate pushbutton *SAFE-STOP*). => Place Work in progress! warning signs on the corresponding terminals and control panels. => Before entering each command at a terminal or control panel, make certain that nobody is in the danger zone.

WARNING	**Risk of injury!** **Risk of being trapped and crushed** by rotating timing belt pulleys and timing belts! => Keep hands at a safe distance from timing belts and timing belt pulleys.

Measure timing belt tension

1. Plug in microphone (1) on the measuring device (Fig. 7).
2. Switch on measuring device on key (2).
3. Press the *SELECT* key (4) until *no. 0* appears in the display (5).
4. Press the *MASS* key (6) and enter the value M 7.9 g/m.
5. Press the *WIDTH* key (7) and enter the value W 70 mm/#R.
6. Press the *SPAN* key (8) and enter the value S 485 mm.

Note

The setting values above for *MASS*, *WIDTH* and *SPAN* are standard settings and have no influence on measurements in *Hz*! These values are only for measuring in *Nm* and therefore do not have to be adapted to the concerned timing belt.

7. Press the *FREQUENCY SELECTION* key (9) until *Hz* appears in the display (5).
8. Press the *MEASUREMENT* key (10); the green LED (11) must flash.
9. Lightly tap timing belt with fork wrench and read display (5).

If the value in the display is indicated in Newton (N):

=> Press the *Frequency selection* (9) key.

Note

For further measurements at the same timing belt or if the message ERROR REMEASURE appears -- red LED (12) lights -- it will no longer be necessary to press the key (10) beforehand.

Fig. 7 Timing belt tension measuring device

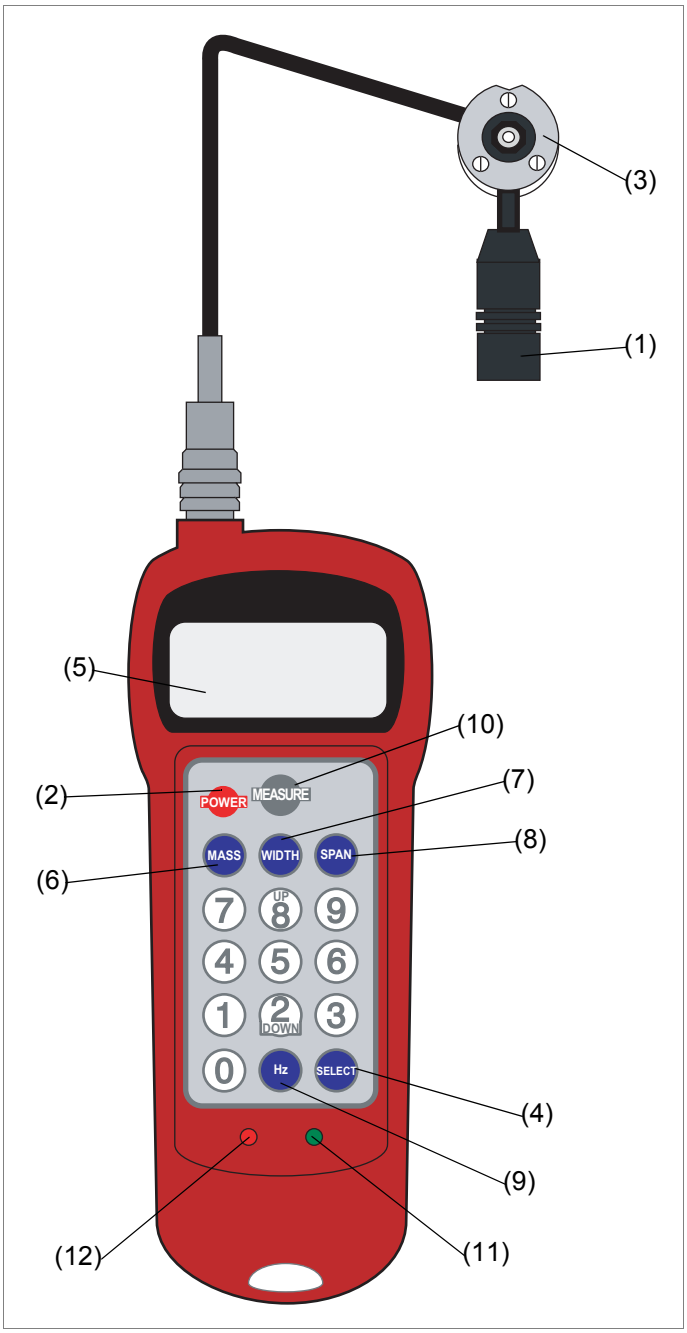

(1) Microphone
(2) ON/OFF key
(3) Magnet holder
(4) SELECT key
(5) Display
(6) MASS key (belt weight)
(7) WIDTH key (belt width)
(8) SPAN key (belt strand)
(9) Frequency selection key
(10) Measurement key
(11) Green LED
(12) Red LED

Set timing belt tension

10. Tension or relax timing belt until the indication in the display (5) agrees with the required value according to Tab. 8 Tension of the individual timing belts.
11. Check timing belt tension again and correct if necessary.
12. Electrically enable function group with the *SAFE-STOP* pushbutton.
13. Remove *Work is in progress!* warning signs.

> The timing belt tension is set.

Tab. 8 Tension of the individual timing belts

Timing belt	Timing belt tension	Fig.
Timing belt for angle bar drive (Chapt. 3.2 Replace angle bar drive timing belt in Reg. 11 Angle-bar system) • tensioning new timing belt the first time	523 - 529 Hz	(Fig. 8)
Timing belt for ribbon register drive (Chapt. 3.2 Replace ribbon register roller adjustment in Reg. 14 Ribbon register) • tensioning new timing belt the first time	197 - 203 Hz	(Fig. 9)
Timing belt for secondary register drive (Chapt. 3.2 Replace the secondary register roller drive timing belt in Reg. 12 Secondary register (optional)) • tensioning new timing belt the first time	192 - 198 Hz	(Fig. 10)
Timing belt for draw roller drive and lower cutter shaft drive (Chapt. 3.6 Replace timing belt for draw roller / lower cutter roller in Reg. 9 Draw roller and cutting unit) • tensioning new timing belt the first time • Re-tension new timing belt after 8 hours • Re-tension every six months	77 - 83 Hz 65 - 71 Hz 65 - 71 Hz	(Fig. 11)

Fig. 8 Timing belt for angle bar drive

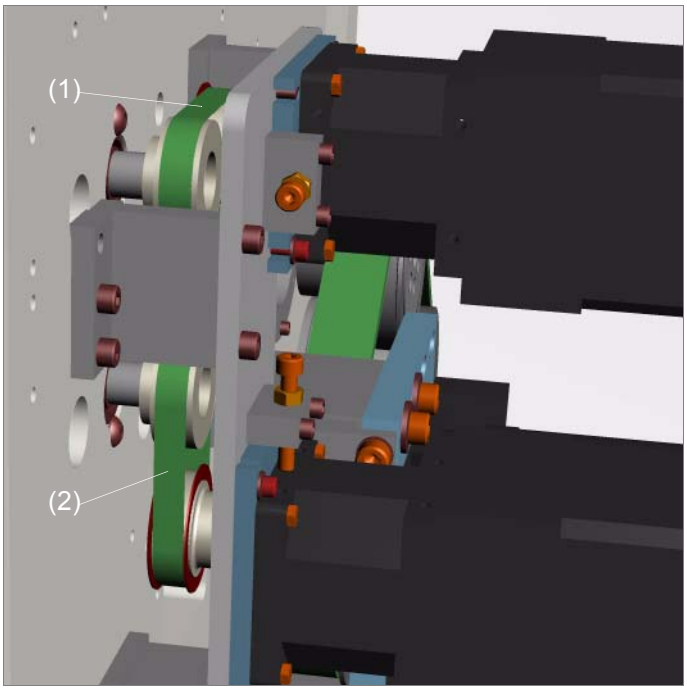

ATU6_K010_02

(1) Measuring point of timing belt for leading angle bar drive

(2) Measuring point of timing belt for trailing angle bar drive

Fig. 9 Timing belt of ribbon register roller drive

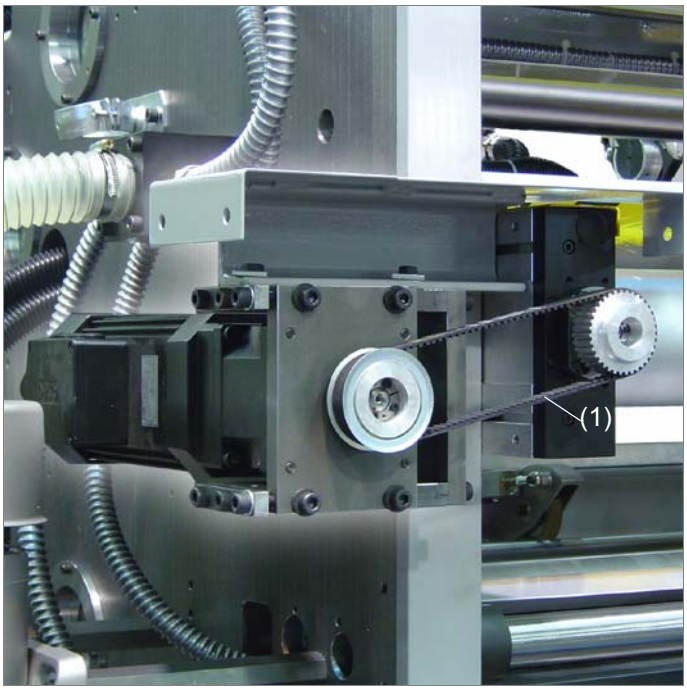

ATU_131_002_01

(1) Measuring point of timing belt for ribbon register drive

Fig. 10 Timing belt for secondary register drive

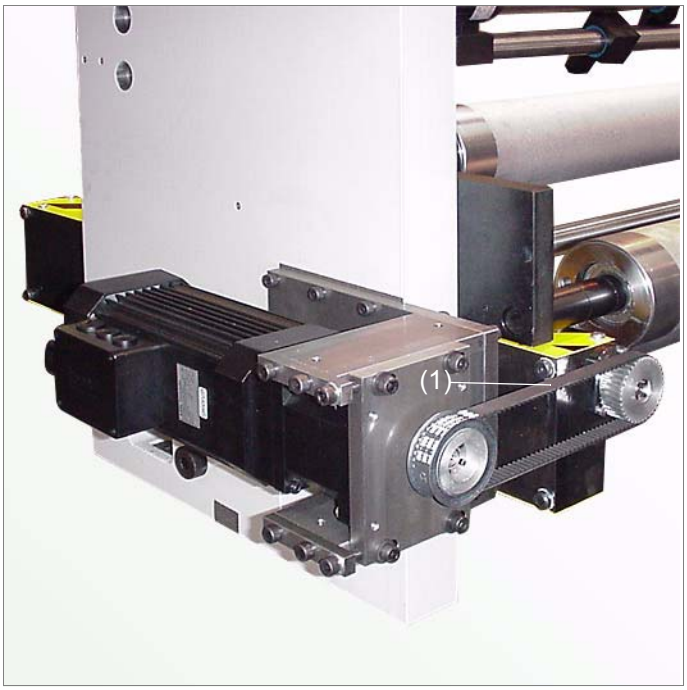

ATU_129_019_01

(1) Secondary register timing belt measuring point

Fig. 11 Timing belt for draw roller drive and lower cutter shaft drive

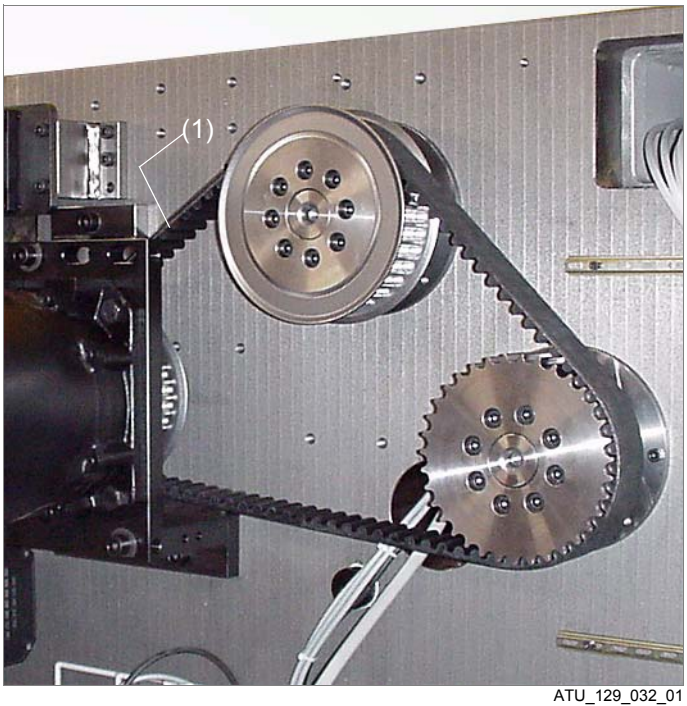

ATU_129_032_01

(1) Measuring point of timing belt for draw roller drive and lower cutter drive

4.13 Maintenance activities on the shear cut cutting holder

Note

For further information see the documentation
for the cutting unit WIFAG/Dienes in the *supplier's documentation* file.

4.14 Maintenance activities on the lower cutter

Note

For further information see the documentation
for the cutting unit WIFAG/Dienes in the *supplier's documentation* file.

4.15 Maintenance activities on the duct compressor

Requirements

- Production group / function group at standstill
- Work on the electrical system may be performed only by specially trained **technicians**.
- Read Chapt. 8.9 Carrying out repairs in Reg. 2 Important for your safety in the *System* file.

Materials needed

- Documentation of the manufacturer in the *Suppliers' documentation* file
- Cabinet key
- Warning sign *Work is in progress!*

DANGER	**Danger!** Risk of a lethal electric **surge**! => Work on electrical switching plants may be carried out only by personnel with the relevant training. => Observe instructions in Chapt. 5.1 Switch current supply on and off in Reg. 2 Important for your safety. => Before touching electrical components, ensure that the power to the function group is switched off and check with a voltmeter.

DANGER	**Danger!** **Operation** of the function group by others! => Electrically disable function group (actuate pushbutton *SAFE-STOP*). => Place Work in progress! warning signs on the corresponding terminals and control panels. => Before entering each command at a terminal or control panel, make certain that nobody is in the danger zone.

1. Open door (1) side I with cabinet key (Fig. 12).
2. Carry out maintenance activities according to manufacturer's documentation in the *Suppliers' documentation* file.
3. Electrically enable function group with the *SAFE-STOP* pushbutton.
4. Close door (1).
5. Remove *Work is in progress!* warning sign.

Fig. 12 Installation location of duct compressor (side 1)

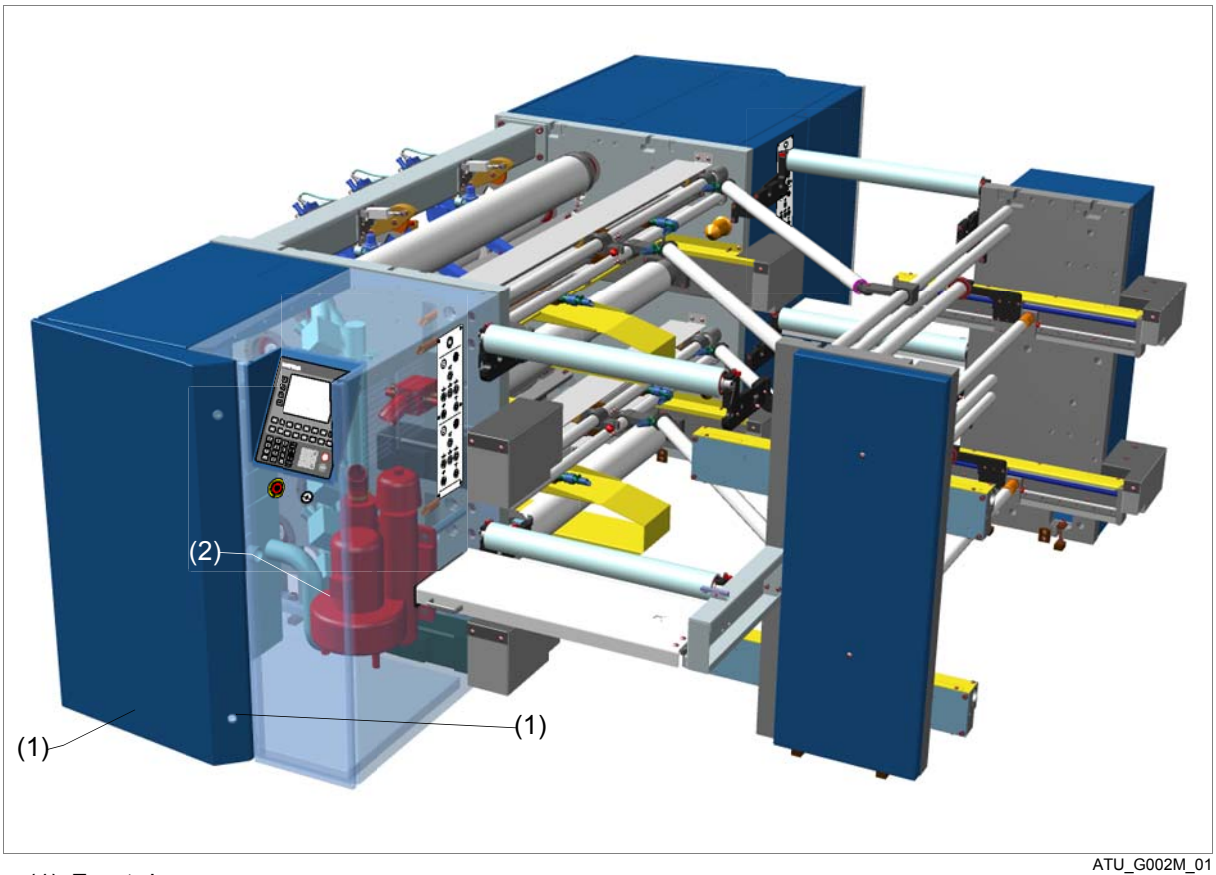

ATU_G002M_01

(1) Front door
(2) duct fan compressor
(3) Lock

4.16 Maintenance activities on the vacuum cleaner

Requirements

- Production group / function group at standstill
- Work on the electrical system may be performed only by specially trained **technicians**.
- Read Chapt. 8.9 Carrying out repairs in Reg. 2 Important for your safety in the *System* file.

Materials needed

- Documentation of the manufacturer in the *Suppliers' documentation* file
- Cabinet key
- Warning sign *Work is in progress!*

DANGER	**Danger!** Risk of a lethal electric **surge**! => Work on electrical switching plants may be carried out only by personnel with the relevant training. => Observe instructions in Chapt. 5.1 Switch current supply on and off in Reg. 2 Important for your safety. => Before working on this electrical device, ensure that the device switch is on *OFF* and the connection cable is disconnected from the power supply.

DANGER	**Danger!** Observe **safety regulations**! **External power supply of filter cleaning!** **Excess pressure inside the device** due to automatic filter cleaning! => Electrically disable function group (actuate pushbutton *SAFE-STOP*). => Read and observe the information about the dust extractor in the manufacturer's documentation.

1. Open door (1) side I with cabinet key (Fig. 13).
2. Carry out maintenance activities according to manufacturer's documentation in the *Suppliers' documentation* file.
3. Electrically enable function group with the *SAFE-STOP* pushbutton.
4. Close door (1).
5. Remove *Work is in progress!* warning sign.

Fig. 13 Installation location of dust extractor (side 1)

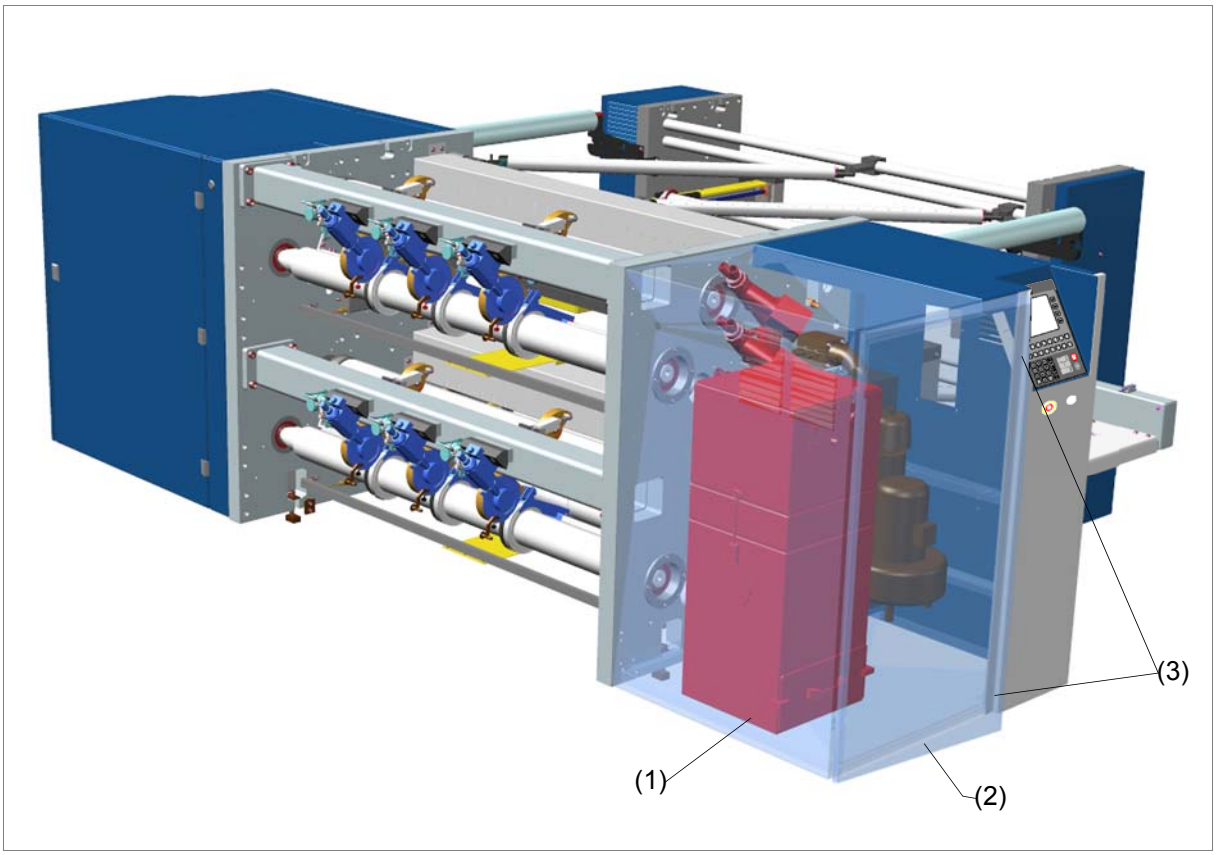

ATU_G003M_01

(1) Dust extractor
(2) Front door
(3) Lock

7 Electrical and control systems

1 Overview **7.3**
1.1 Overview of electrical components **7.4**

2 Construction and function **7.6**
2.1 Power supply **7.6**
2.1.1 Safety switches for the power supply 7.6
2.1.2 Main switch of the power supply 7.9
2.1.3 Switching the power supply on and off 7.10
2.1.4 main supply 7.12
2.1.5 Uninterruptible power supply (USV/UPS) 7.13
2.2 Bus systems **7.14**
2.2.1 Ethernet 7.14
2.2.2 CANOpen bus 7.15
2.3 Special electrical components **7.16**

3 Replace components **7.17**

4 Basic settings **7.18**

5 Commissioning **7.19**

1 Overview

Contents

This chapter contains the following information:

• Chapt. 1.1 Overview of electrical components

1.1 Overview of electrical components

Fig. 1 Electrical components on the angle-bar module (example)

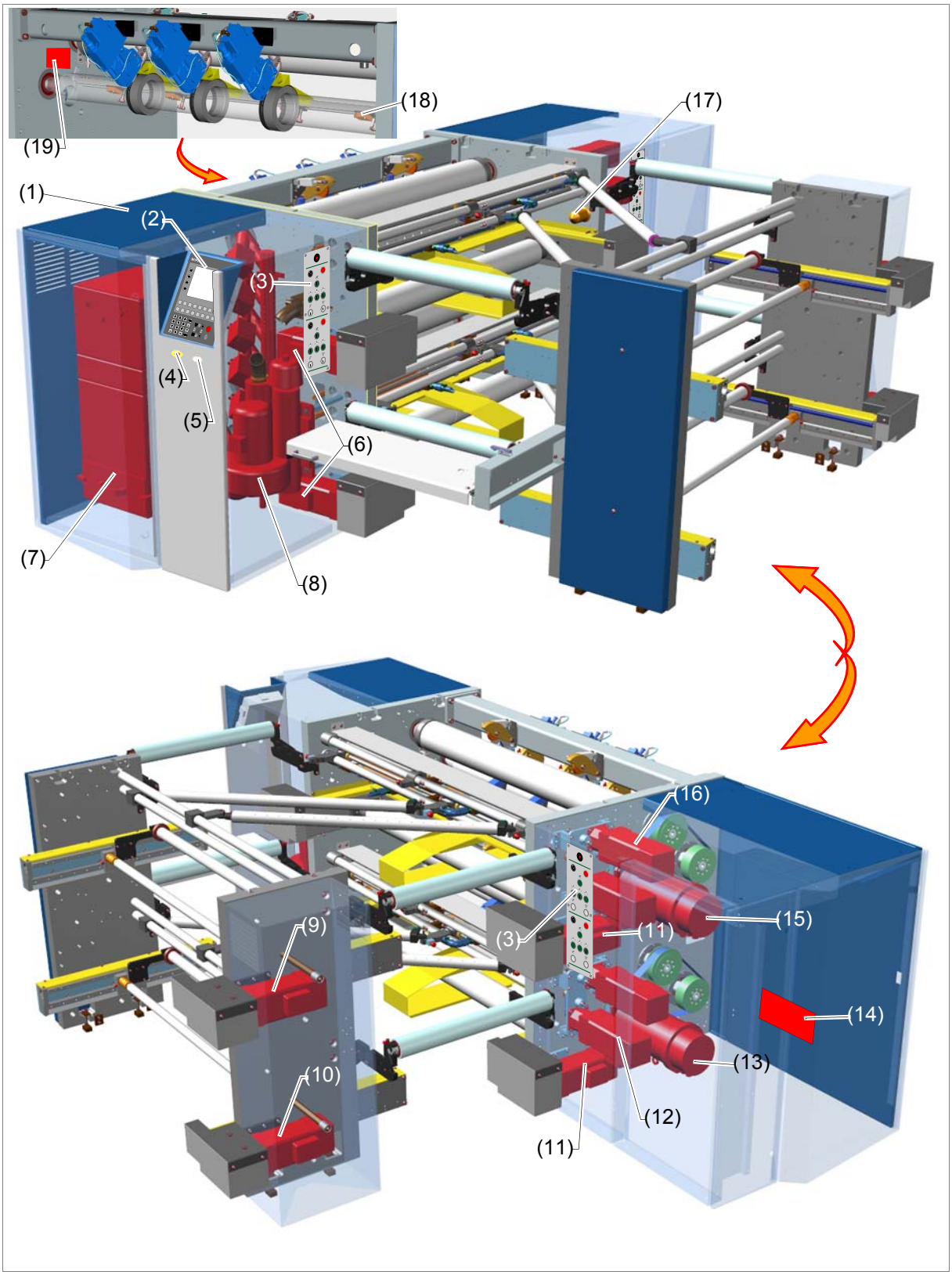

ATU_H001M_01

Fig. 1 Electrical components on the angle-bar module (example)

(1) Autoturn box ATx
(2) Terminal
(3) Control panel
(4) Emergency-stop
(5) *Reference* pushbutton
(6) Ribbon register drive S1
(7) Dust extractor
(8) duct fan compressor
(9) Upper secondary register drive
(10) Lower secondary register drive
(11) Ribbon register drive S2
(12) Lower angle-bar drive
(13) Lower draw roller drive
(14) Electropneumatic valves
(15) Upper draw roller drive
(16) Upper angle-bar drive
(17) Signal lamp
(18) Upper draw roller web-break detector
(19) Feed-in device drives (optional)

2 Construction and function

Contents

This chapter contains the following information:

- Chapt. 2.1 Power supply
- Chapt. 2.2 Bus systems
- Chapt. 2.3 Special electrical components

2.1 Power supply

2.1.1 Safety switches for the power supply

- For each function group one safety switch (1) is integrated on the vertical busbar. The safety switches are located in safety sector C (paper buffer area) (Fig. 2).
- The thermal and electromagnetic tripping currents are set on the safety switches at the factory and can viewed in the electrical circuit diagrams of the concerned section.
- The uninterruptible power supply (USV/UPS) safety switch is located in the concerned switchgear cabinets (Fig. 3).

Specification

The safety switch may only be actuated in an emergency or for maintenance and repair work on the part of the system that is affected!

Specification

When repair work is performed on the electrical system of the connected subassemblies (folder, folder superstructure, former, angle-bar module, etc.), the safety switch must be secured in the *OFF* position with a padlock and a warning notice must be mounted!

Fig. 2 Safety switch I schematic diagram (vertical busbar)

F_198_063_01

(1) Folder circuit breaker
(2) Circuit breaker for former level 1 / mid-section
(3) Circuit breaker
(See the *WIFAG electrical circuit diagram* of the concerned section for which subassembly is connected to the safety switch.)
(4) Circuit breaker
(See the *WIFAG electrical circuit diagram* of the concerned section for which subassembly is connected to the safety switch.)
(5) Circuit breaker
(See the *WIFAG electrical circuit diagram* of the concerned section for which subassembly is connected to the safety switch.)
(6) Circuit breaker
(See the *WIFAG electrical circuit diagram* of the concerned section for which subassembly is connected to the safety switch.)
(7) Vertical busbar
(8) Padlock

Angle-bar module box WK

Fig. 3 Safety switch I

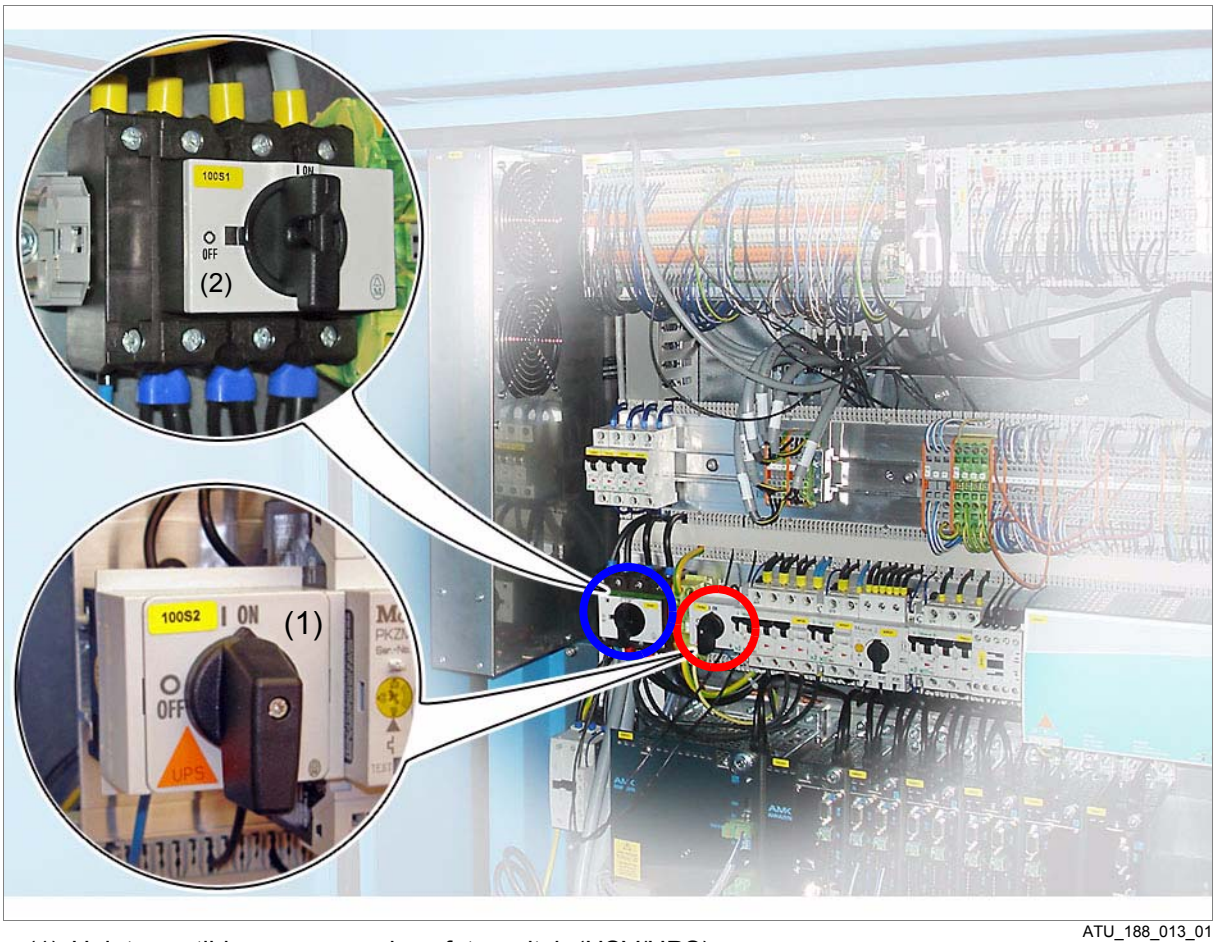

ATU_188_013_01

(1) Uninterruptible power supply safety switch (USV/UPS)
(2) Main switch for AMK controller KE/KW

2.1.2 Main switch of the power supply

Paper dust extraction

Note

Switch the paper dust extractor (3) on and off in accordance with the manufacturer's documentation in the *Suppliers' documentation* file.

Fig. 4 Paper dust extraction

ATU_157_008_01

(1) Mains connection
(2) Control console
(3) Compressed air connection
(4) Compressed air tank
(5) Filter housing
(6) Paper dust drawer
(7) Equipotential bonding connection (grounding)

2.1.3 Switching the power supply on and off

What can be switched off?

The safety switches in the switchgear cabinet affect the corresponding printing unit and interrupt the main power supply or the uninterruptible power supply completely.

Additional connector sockets cannot be isolated from the voltage supply with the safety circuit breakers. These remain available and active, even when the system is switched off. Such connector sockets are marked in the switch cabinets with the notice ***EXTERNAL VOLTAGE***.

Important markings

Parts of the system to which voltage continues to be supplied after the main switch is Off are designated as follows:

Tab. 1 UPS markings

Equipment with UPS voltage in excess of 50 V!	**Equipment carrying a dangerous voltage, also when the main switch is switched off (> 50 V)!**
(orange)	(yellow)

DANGER	**Danger!** Risk of a lethal electric **shock**! Parts of the system which are switched off can still be supplied with voltage on systems fitted with uninterruptible power supply (UPS). => Work on electrical switching plants may be carried out only by personnel with the relevant training. => Before touching electrical components, ensure that the power to the function group is switched off and check with a voltmeter.

Switch off

1. Switch off concerned safety switch **O Off**.
2. Safeguard against unauthorized switching back on.

> Mount a lock and/or warning notice!

Switch back on

1. Remove padlock.
2. Switch the corresponding safety switch to **I ON**.
3. Remove warning notice.

The power supply is again switched on.

2.1.4 main supply

Fig. 5 Schematic of a voltage distribution

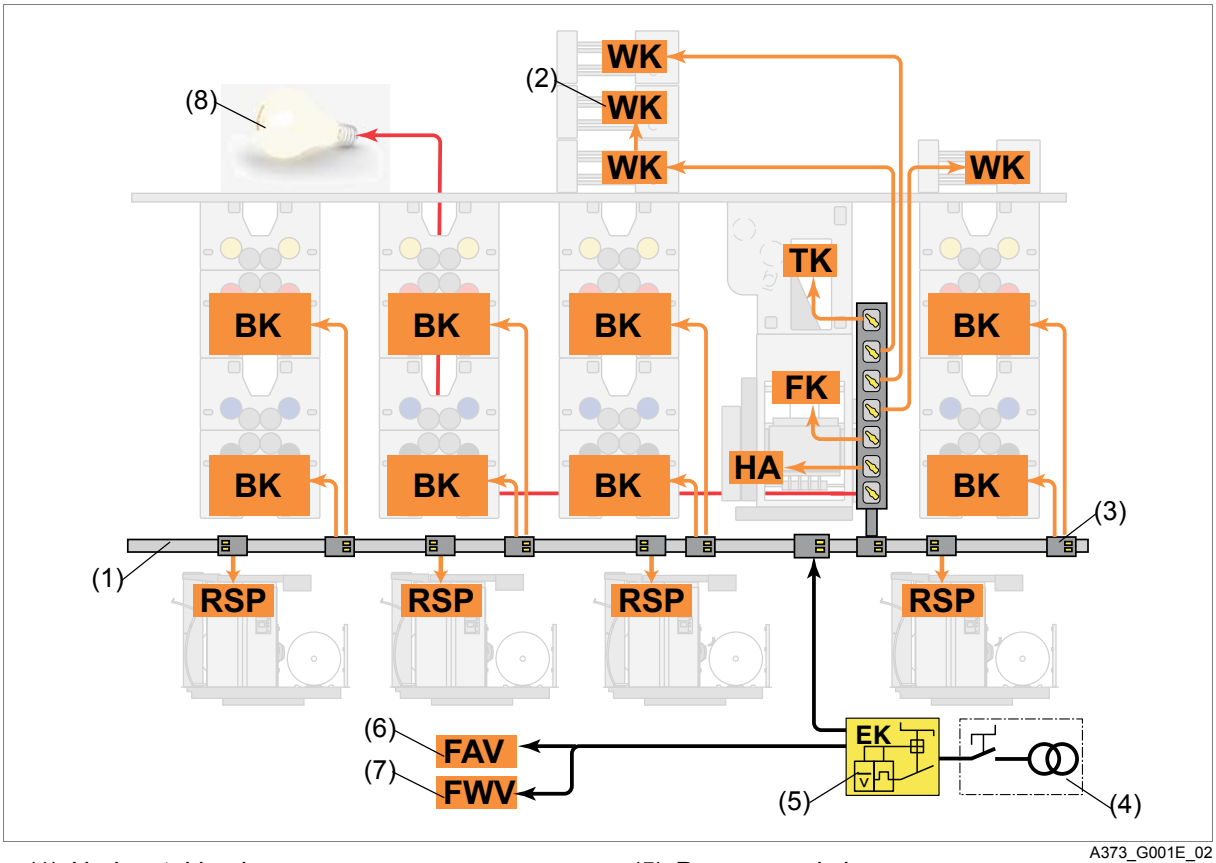

(1) Horizontal busbars
(2) Switchgear cabinets in the function groups
(3) Junction boxes
(4) Transformer primary supply (customer)
(5) Power supply box
(6) Central ink supply
(7) Dampening solution supply
(8) lighting

Further information can be found:

- *WIFAG electrical circuit diagrams (F)*
- Chapt. 5.1 Switch current supply on and off in Reg. 2 Important for your safety.
- Chapt. 2.1 Power supply in Reg. 7 Electrical and control systems in the *System* file.

2.1.5 Uninterruptible power supply (USV/UPS)

Fig. 6 Schematic diagram of UPS power supply

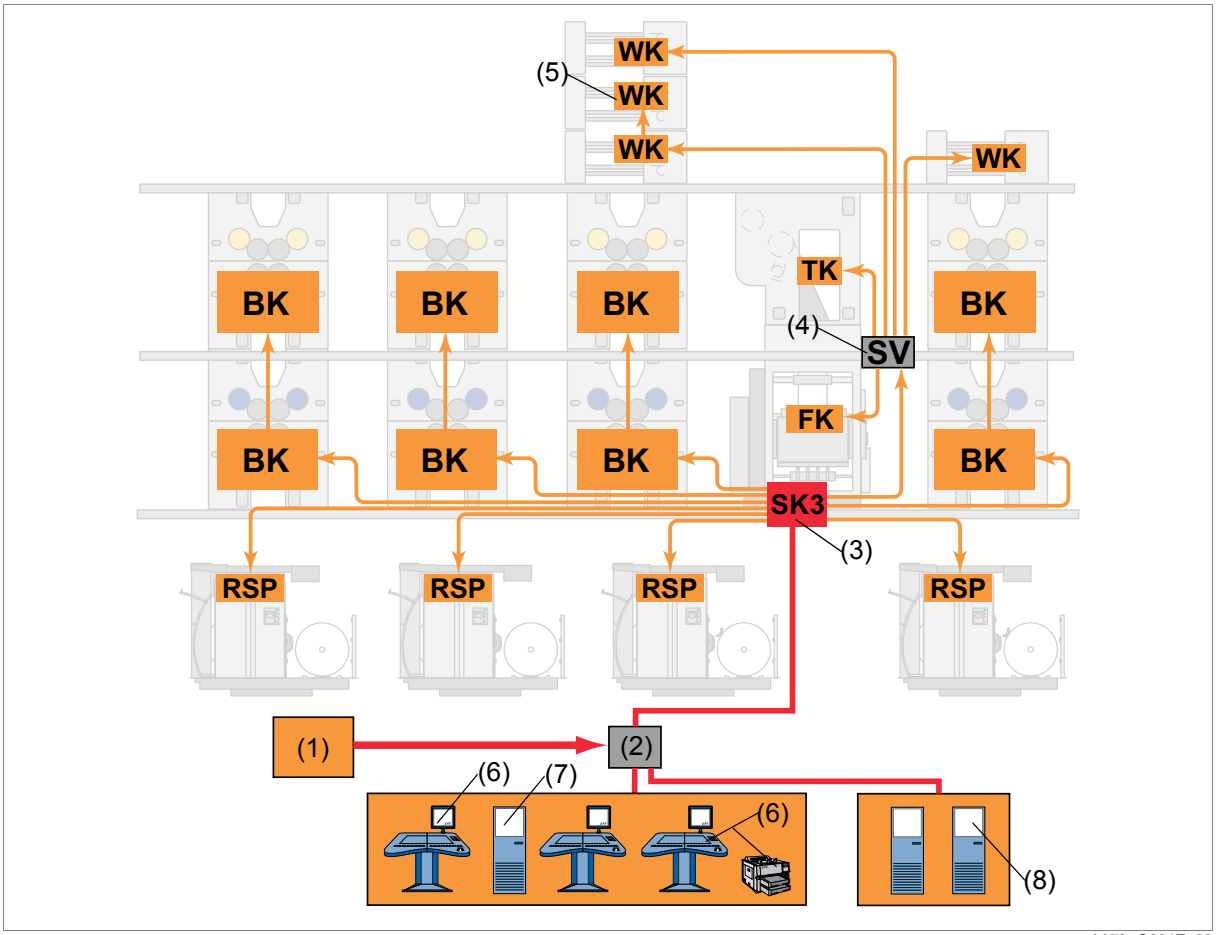

(1) UPS supply (40 kW)
(2) UPS distribution cabinet
(3) SK3 (section box)
(4) SV folder
(5) Switchgear cabinets in the function groups
(6) Central control console & printer
(7) SMK3 (section master box)
(8) SGS (section gateway system)

Further information can be found:

- WIFAG electrical circuit diagram (AT, FK)
- Chapt. 5.1 Switch current supply on and off in Reg. 2 Important for your safety.
- Chapt. 2.1.4 UPS power supply in Reg. 7 Electrical and control systems in the *System* file.

2.2 Bus systems

Note

For information see Chapt. 2.2 Bus systems in Reg. 7 Electrical and control systems in the *System* file.

2.2.1 Ethernet

Function

- Ethernet connection: Terminals Y local control systems (SYMAC) Y service PC
- Transfer speed 10/100 Mbit/s (RJ45)
- SERCOS III Connection: section control (SYMAC) ♣♣♣ local control systems (SYMAC)
  – Transfer speed 10/100/1000 Mbit/s (RJ45)

Configuration

- Ethernet cable
- See the equipment-specific documents by WIFAG

Fig. 7 Ethernet angle-bar module

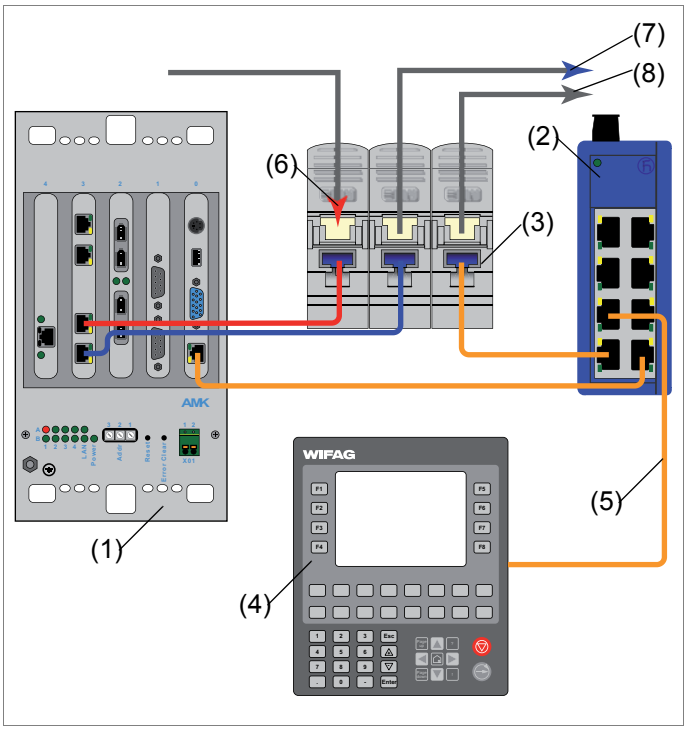

AP_F001E_04

(1) SYMAC control
(2) Ethernet switch
(3) Connection
(4) Terminal
(5) Ethernet
(6) Ethernet SERCOS III IN
(7) Ethernet SERCOS III OUT
(8) Supervisory level Ethernet

2.2.2 CANOpen bus

Function

– Connection 1: SYMAC control system ⇔ drive controller ⇔ WAGO I/O ⇔ WiSi-Box
– Connection 2: SYMAC control system ⇔ drive controller ⇔ WAGO I/O

Configuration

- Connections: Firewire cable (3*2*0.25 mm^2)
- Terminating resistance 120 Ohm

Fig. 8 Example of CANOpen bus in the angle-bar module box (WX)

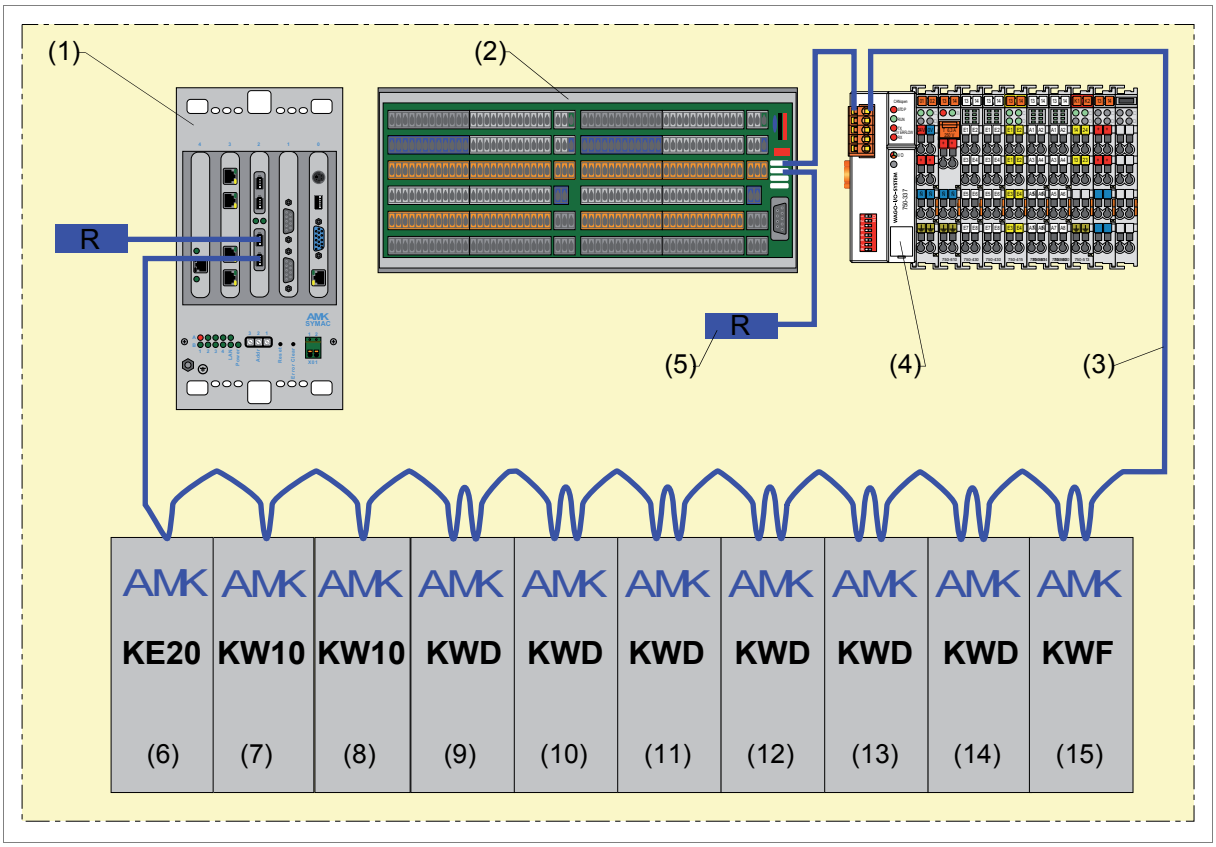

ATU_G006E_13

(1) SYMAC control
(2) WiSiBox
(3) Firewire cable
(4) WAGO I/O
(5) Terminating resistance 120 Ohm
(6) AMK supply unit KE
(7) AMK inverter KW -> regulation of draw roller drive 1
(8) AMK inverter KW -> regulation of draw roller drive 2
(9) AMK KWD -> regulation of ribbon register 1
(10) AMK KWD -> regulation of ribbon register 2
(11) AMK KWD -> regulation of angle bars 1
(12) AMK KWD -> regulation of angle bars 2
(13) AMK KWD -> regulation of secondary register 1
(14) AMK KWD -> regulation of secondary register 2
(15) AMK KWF -> regulation of feed-in device (optional)

2.3 Special electrical components

Note

There are no special electrical components present.

Note

For information about electrical components used in multiple function groups see Chapt. 2.5 Electrical components in general in Reg. 7 Electrical and control systems in the *System* file.

3 Replace components

Specification

For safety reasons only the replacement work described in these operating instructions may be performed! All replacement work not described herein must be performed by qualified WIFAG personnel.

Requirements

- Work on the electrical system may be performed only by specially trained **technicians**.
- Read Chapt. 8 Important points for work safety in Reg. 2 Important for your safety in the *System* file.

DANGER	**Danger!** Risk of a lethal electric **surge**! => Work on electrical switching plants may be carried out only by personnel with the relevant training. => Observe instructions in Chapt. 5.1 Switch current supply on and off in Reg. 2 Important for your safety. => Before touching electrical components, ensure that the power to the function group is switched off and check with a voltmeter.

Replacing electrical devices

- See Chapt. 2.1 Replacing electrical devices in general in Reg. 11 Electrical setting and commissioning instructions in the *System* file.

Replace drives

- See Chapt. 2.2 Replacing drives in Reg. 11 Electrical setting and commissioning instructions in the *System* file.

4 Basic settings

Specification

For safety reasons only the adjustment work described in these operating instructions may be performed! All adjustment work not described herein must be performed by qualified WIFAG personnel.

Requirements

- Work on the electrical system may be performed only by specially trained **technicians**.
- Read Chapt. 8 Important points for work safety in Reg. 2 Important for your safety in the *System* file.

DANGER	**Danger!** Risk of a lethal electric **surge**! => Work on electrical switching plants may be carried out only by personnel with the relevant training. => Observe instructions in Chapt. 5.1 Switch current supply on and off in Reg. 2 Important for your safety. => Before touching electrical components, ensure that the power to the function group is switched off and check with a voltmeter.

Setting proximity sensors and reflected light sensors

- See Chapt. 4.1 Setting proximity sensors and reflected light sensors in Reg. 11 Electrical setting and commissioning instructions in the *System* file.

5 Commissioning

Specification

For safety reasons only the commissioning work described in these operating instructions may be performed! All commissioning work not described herein must be performed by qualified WIFAG personnel.

Requirements

- Work on the electrical system may be performed only by specially trained **technicians**.
- Read Chapt. 8 Important points for work safety in Reg. 2 Important for your safety in the *System* file.

DANGER	**Danger!** Risk of a lethal electric **surge**! => Work on electrical switching plants may be carried out only by personnel with the relevant training. => Observe instructions in Chapt. 5.1 Switch current supply on and off in Reg. 2 Important for your safety. => Before touching electrical components, ensure that the power to the function group is switched off and check with a voltmeter.

Commissioning the AMK controller

- See Chapt. 3.3 AMK drive controller in Reg. 11 Electrical setting and commissioning instructions in the *System* file.

Commissioning the SYMAC

- See Chapt. 3.1 AMKAMAC control device in Reg. 11 Electrical setting and commissioning instructions in the *System* file.

Commissioning the WiSiBox

- See Chapt. 3.4 WiSiBox in Reg. 11 Electrical setting and commissioning instructions in the *System* file.

Commissioning the terminal

- See Chapt. 3.5 Terminal in Reg. 11 Electrical setting and commissioning instructions in the *System* file.

8 Pneumatic system

1 Overview **8.3**
1.1 System **8.3**
1.2 Angle-bar module **8.4**
1.3 Pneumatic system schematics **8.5**
1.4 Configuration and actuation of the pneumatic valves **8.6**

2 Construction and function **8.7**
2.1 Main air pressure-regulator **8.7**
2.2 Pressure switch **8.7**
2.3 Filter-regulator-lubricator unit **8.7**
2.4 Pneumatic components on subfunction groups **8.7**
2.5 Valve block **8.8**

3 Replace components **8.10**
3.1 WIFAG article numbers **8.10**
3.2 Replace standard components **8.11**
3.3 Replace special components **8.11**

4 Basic settings **8.12**
4.1 Setting **8.12**
4.1.1 Set the compressor 8.12
4.1.2 Set the main air pressure-regulator 8.12
4.1.3 Setting the filter-regulator-lubricator unit 8.12
4.1.4 Set one-way restrictor valve 8.13
4.2 Calibration **8.13**
4.3 Testing **8.14**
4.3.1 Test pneumatic valves 8.14

1 Overview

Contents

This chapter contains the following information:

- Chapt. 1.1 System
- Chapt. 1.2 Angle-bar module
- Chapt. 1.3 Pneumatic system schematics
- Chapt. 1.4 Configuration and actuation of the pneumatic valves

1.1 System

Note

For further information about the overall pneumatic system see Chapt. 1 Overview in Reg. 8 Pneumatic system in the *System* file.

1.2 Angle-bar module

Fig. 1 Pneumatic system overview

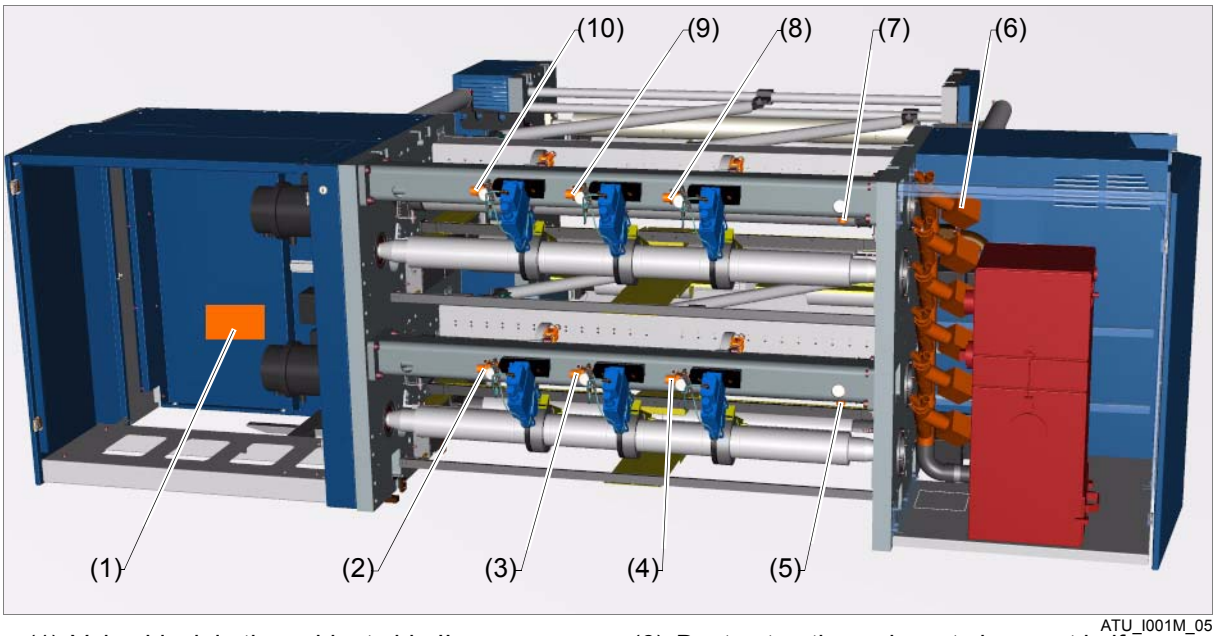

ATU_I001M_05

(1) Valve block in the cabinet side II
(2) Lower shear cut knife, side II (optional)
(3) Lower shear cut knife, middle
(4) Lower shear cut knife, side I (optional)
(5) Lower pressure rollers
(6) Dust extraction valvesat shear cut knife shear cut knife
(7) Upper pressure rollers
(8) Upper shear cut knife, side I (optional)
(9) Upper shear cut knife, middle
(10) Upper shear cut knife, side II (optional)

Note

The angle-bar module does not have its own filter-regulator-lubricator unit. The valve block of the angle-bar module is supplied with compressed air from the filter-regulator-lubricator unit of the next printing unit.

1.3 Pneumatic system schematics

Fig. 2 Pneumatic system diagram for autoturn

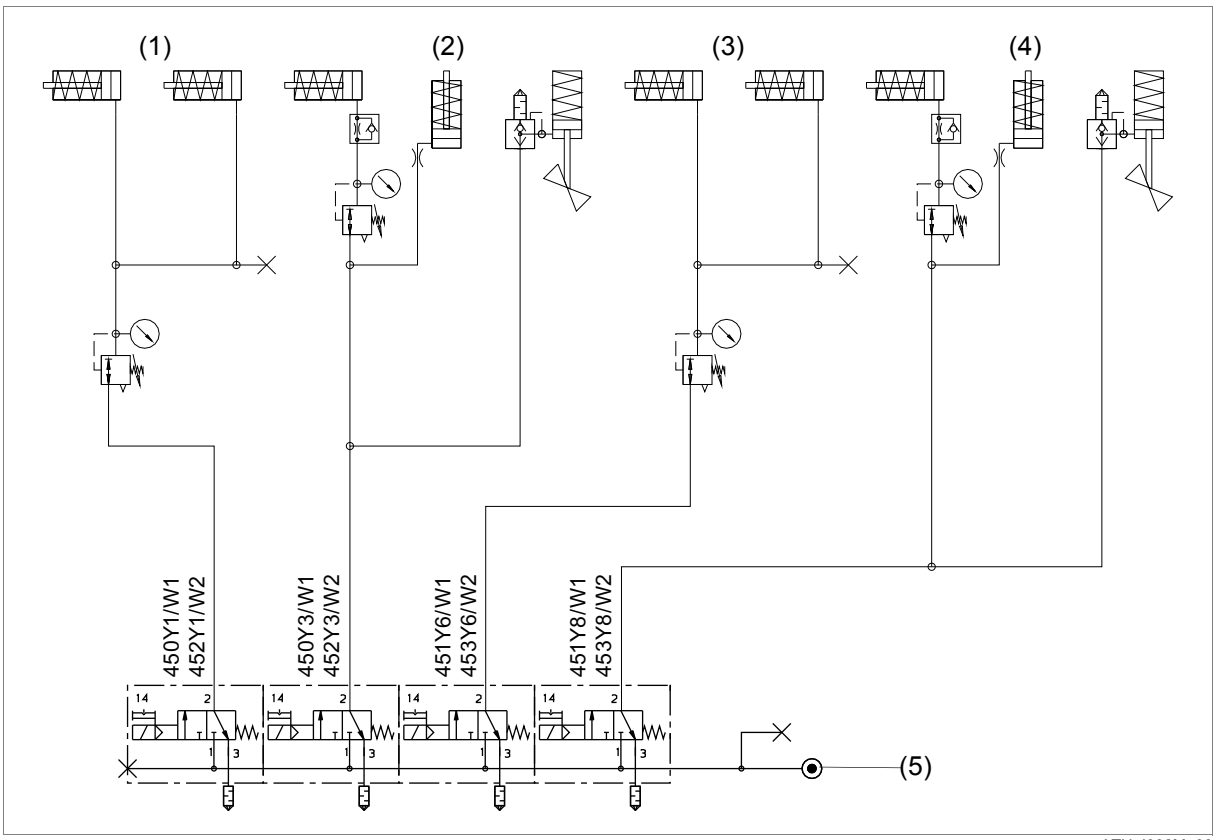

ATU_I002M_06

(1) Lower pressure rollers
(2) Dust extraction and lower cutter in the middle
(3) Upper pressure rollers
(4) Dust extraction and upper cutter in the middle
(5) Filter-regulator-lubricator unit in printing unit (Reg. 8 Pneumatic system in the *System* file)

1.4 Configuration and actuation of the pneumatic valves

Tab. 1 Configuration and actuation of the pneumatic valves

Activated element	Place No.	State	Coil no. 14	Valve type
Lower pressure rollers	1	OFF	0	End valve 3/2 type 579
		ON	1	
Shear cut knife and dust extraction, below middle	2	OFF	0	Interlinking valve 3/2 type 579
		ON	1	
Upper pressure rollers	3	OFF	0	Interlinking valve 3/2 type 579
		ON	1	
Shear cut knife and dust extraction, above middle	4	OFF	0	Inlet valve 3/2 type 579
		ON	1	

Legend:

1 = LED lit, coil power on
0 = LED not lit, coil power off

2 Construction and function

Contents

This chapter contains the following information:

- Chapt. 2.1 Main air pressure-regulator
- Chapt. 2.2 Pressure switch
- Chapt. 2.3 Filter-regulator-lubricator unit
- Chapt. 2.4 Pneumatic components on subfunction groups
- Chapt. 2.5 Valve block

2.1 Main air pressure-regulator

Note

For further information about the overall pneumatic system see Chapt. 2.1 Main air pressure-regulator in Reg. 8 Pneumatic system in the *System* file.

2.2 Pressure switch

Note

For further information about the overall pneumatic system see Chapt. 2.2 Pressure switch in Reg. 8 Pneumatic system in the *System* file.

2.3 Filter-regulator-lubricator unit

Note

For further information about the overall pneumatic system see Chapt. 2.3 Filter-regulator-lubricator unit in Reg. 8 Pneumatic system in the *System* file.

2.4 Pneumatic components on subfunction groups

Note

Information about the design and function of various pneumatic components on the angle-bar module is Reg. 9 Draw roller and cutting unit and Reg. 13 Dust extraction.

2.5 Valve block

One valve block per angle-bar module is installed on side II for switching the pneumatic actuators (Fig. 3).

The valves (1) (2) (3) are electrically actuated by WAGO I/O and pneumatically switched.
The valves can also be manually actuated using the auxiliary manual control (4) (Fig. 3).

Specification

The rotary switch for the auxiliary manual control must **not** be depressed!

Note

Information about the valve configuration can be found in the pneumatic system schematic (Fig. 2) and in the Tab. 1 Configuration and actuation of the pneumatic valves.

Fig. 3 Autoturn valve unit

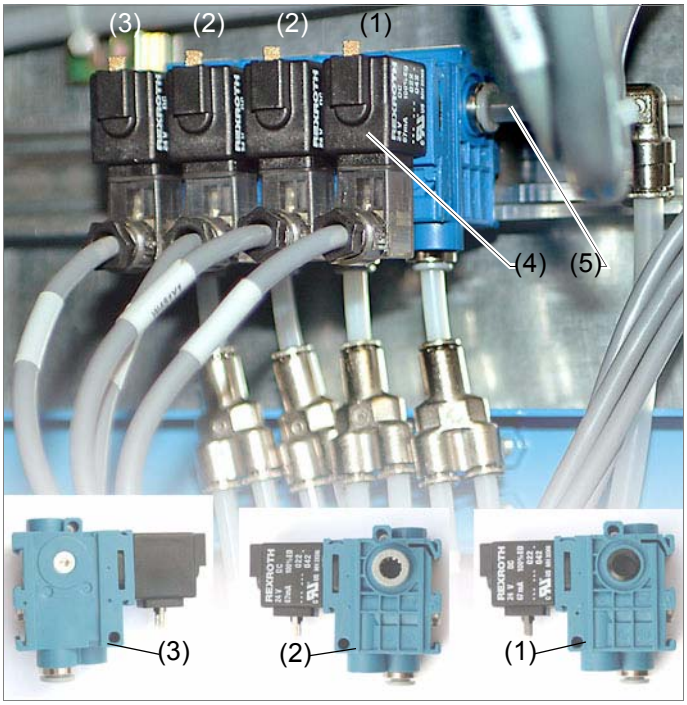

ATU_218_005_01

(1) Inlet valve
(2) Interlinking valve
(3) End valve
(4) Coil
(5) Compressed air supply

Fig. 4 Solenoid valve

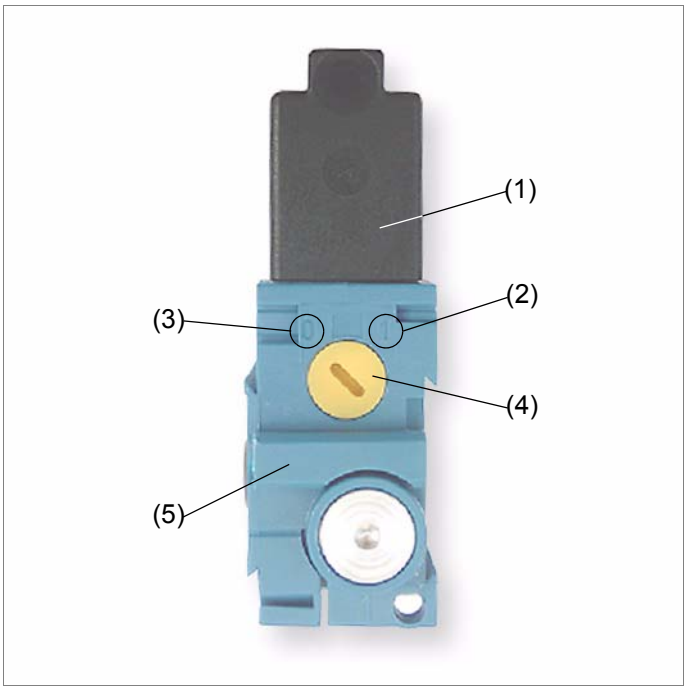

ATU_129_023_01

(1) Coil
(2) Position I
= auxiliary manual control active
(3) Position O
= auxiliary manual control inactive
(4) Rotary switch for auxiliary manual control
(5) Valve

3 Replace components

Contents

This chapter contains the following information:

- Chapt. 3.1 WIFAG article numbers
- Chapt. 3.2 Replace standard components
- Chapt. 3.3 Replace special components

Specification

For safety reasons only the replacement work described in these operating instructions may be performed! All replacement work not described herein must be performed by qualified WIFAG personnel.

3.1 WIFAG article numbers

Note

The WIFAG article numbers for parts of the valve block and cross-system pneumatic system can be found in Chapt. 3.1 WIFAG article numbers in Reg. 8 Pneumatic system in the *System* file.

Tab. 2 Overview of components and accessories

Article	Obtainable only from WIFAG	Can be ordered from WIFAG
Angle-bar module pneumatic components	1459785	----------

3.2 Replace standard components

Note

For further information about replacement work see Chapt. 3 Replace components in Reg. 8 Pneumatic system in the *System* file.

3.3 Replace special components

Note

No special components are fitted to the angle-bar module.

4 Basic settings

Contents

This chapter contains the following information:

- Chapt. 4.1 Setting
- Chapt. 4.2 Calibration
- Chapt. 4.3 Testing

Specification

For safety reasons only the adjustment work described in these operating instructions may be performed! All adjustment work not described herein must be performed by qualified WIFAG personnel.

4.1 Setting

4.1.1 Set the compressor

Note

For further information about setting work see Chapt. 4.1.1 Setting the compressor in Reg. 8 Pneumatic system in the *System* file.

4.1.2 Set the main air pressure-regulator

Note

For further information about setting work see Chapt. 4.1.2 Set the main air pressure-regulator in Reg. 8 Pneumatic system in the *System* file.

4.1.3 Setting the filter-regulator-lubricator unit

Note

For further information about setting work see Chapt. 4.1.3 Setting the filter-regulator-lubricator unit in Reg. 8 Pneumatic system in the *System* file.

4.1.4 Set one-way restrictor valve

Note

Further information about this adjustment work can be found in the following chapters:

- Chapt. 4.1.1 Set operating pressure of the pressure roller in Reg. 9 Draw roller and cutting unit
- Chapt. 4.1.2 Set operating pressure of the cutter in Reg. 9 Draw roller and cutting unit

4.2 Calibration

Note

No calibrations are necessary on this sub-function group.

4.3 Testing

4.3.1 Test pneumatic valves

Requirements

- Production group / function group at standstill

Materials needed

- Screwdriver no. 4
- Autoturn pneumatic system diagram

DANGER	**Risk of injury!** **Operation** of the function group by others! => Electrically disable function group (actuate pushbutton *SAFE-STOP*). => Place Work in progress! warning signs on the corre-sponding terminals and control panels. => Before entering each command at a terminal or control panel, make certain that nobody is in the danger zone.

Note

The valves can also be manually actuated for the test using the auxiliary manual control (4) in accordance with (Fig. 4).
The individual valves can also be actuated with the corresponding command on the control panel as described in Chapt. 2.1 Angel-bar module control panel in Reg. 3 Control elements.

9 Draw roller and cutting unit

1 Overview ... 9.3

2 Construction and function ... 9.4
2.1 Drive for draw roller and lower cutter shaft ... 9.5
2.2 Cooling ... 9.6
2.3 Bottom cutter shaft ... 9.7
2.4 Cutting unit ... 9.8
2.5 Draw roller ... 9.8
2.6 Pressure roller ... 9.9

3 Replace components ... 9.10
3.1 WIFAG article numbers ... 9.11
3.2 Replace pressure roller ... 9.12
3.3 Replace shear cut knife holder ... 9.14
3.4 Replace cutter ... 9.14
3.5 Replace lower cutter ... 9.14
3.6 Replace timing belt for draw roller / lower cutter roller ... 9.15
3.7 Replace drive for draw roller / lower cutter roller ... 9.17

4 Basic settings ... 9.21
4.1 Setting ... 9.22
4.1.1 Set operating pressure of the pressure roller ... 9.22
4.1.2 Set operating pressure of the cutter ... 9.23
4.1.3 Bleed drive ... 9.24
4.2 Calibration ... 9.25
4.3 Testing ... 9.26

1 Overview

The draw roller (2) and the pressure rollers (3) serve the controlled transport and drawing of the printed web out of the printing couple (Fig. 1).
With the cutting unit (4) the paper webs can be divided longitudinally. A cutting unit consists of a shear cut cutter holder with cutter (upper cutter) and a lower cutter mounted on a driven shaft.

Fig. 1 Overview of draw roller and cutting unit

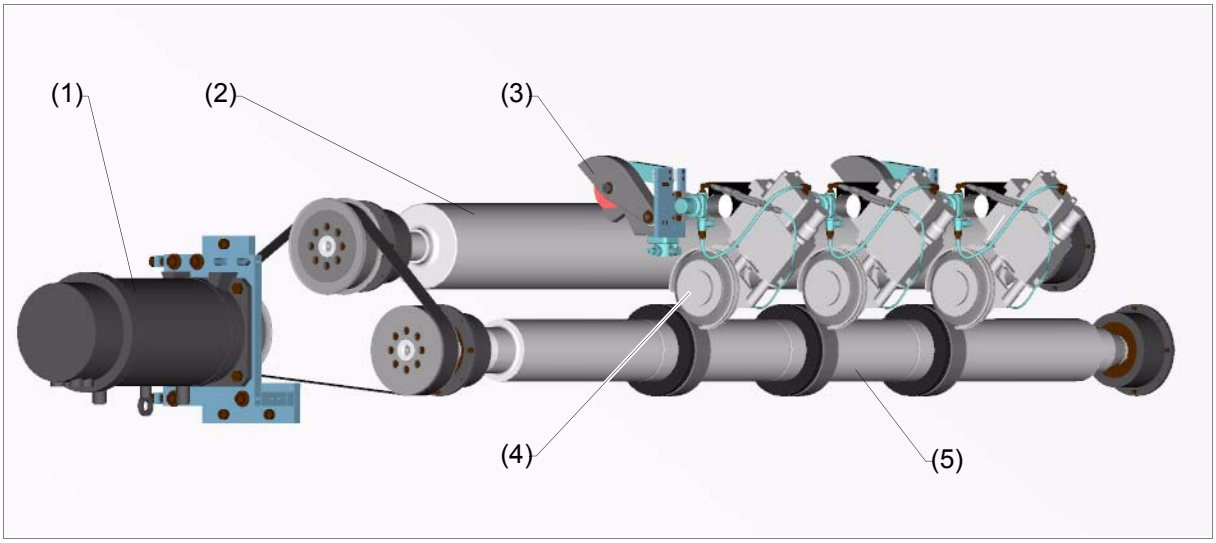

ATU_J001M_02

(1) Drive for draw roller and lower cutter shaft
(2) Draw roller
(3) Pressure roller
(4) Cutting unit
(5) Lower cutter shaft

2 Construction and function

Contents

This chapter contains the following information:

- Chapt. 2.1 Drive for draw roller and lower cutter shaft
- Chapt. 2.2 Cooling
- Chapt. 2.3 Bottom cutter shaft
- Chapt. 2.4 Cutting unit
- Chapt. 2.5 Draw roller
- Chapt. 2.6 Pressure roller

2.1 Drive for draw roller and lower cutter shaft

The draw roller (3) and the lower cutter shaft (4) are driven via a timing belt (6) by an electric motor (1) (hereafter called a “drive”).
The drive is water-cooled (Fig. 2).
The speed is monitored by a resolver integrated in the drive.

Fig. 2 Drive for draw roller and lower cutter shaft

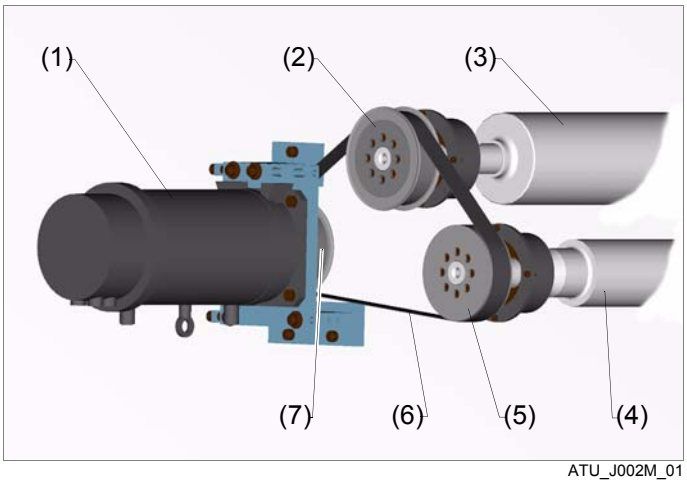

ATU_J002M_01

(1) drive
(2) Timing belt pulley for draw roller
(3) Draw roller
(4) Lower cutter shaft
(5) Timing belt pulley for lower knife shaft
(6) Timing belt
(7) Timing belt pulley for drive

2.2 Cooling

The draw roller drives (7) (Fig. 3) are water-cooled and connected by means of a circulation loop to the cooling units (3) (6) in the angle-bar module box. The cooling units built into the angle-bar module box are also supported by fans.

Fig. 3 Cooling diagram

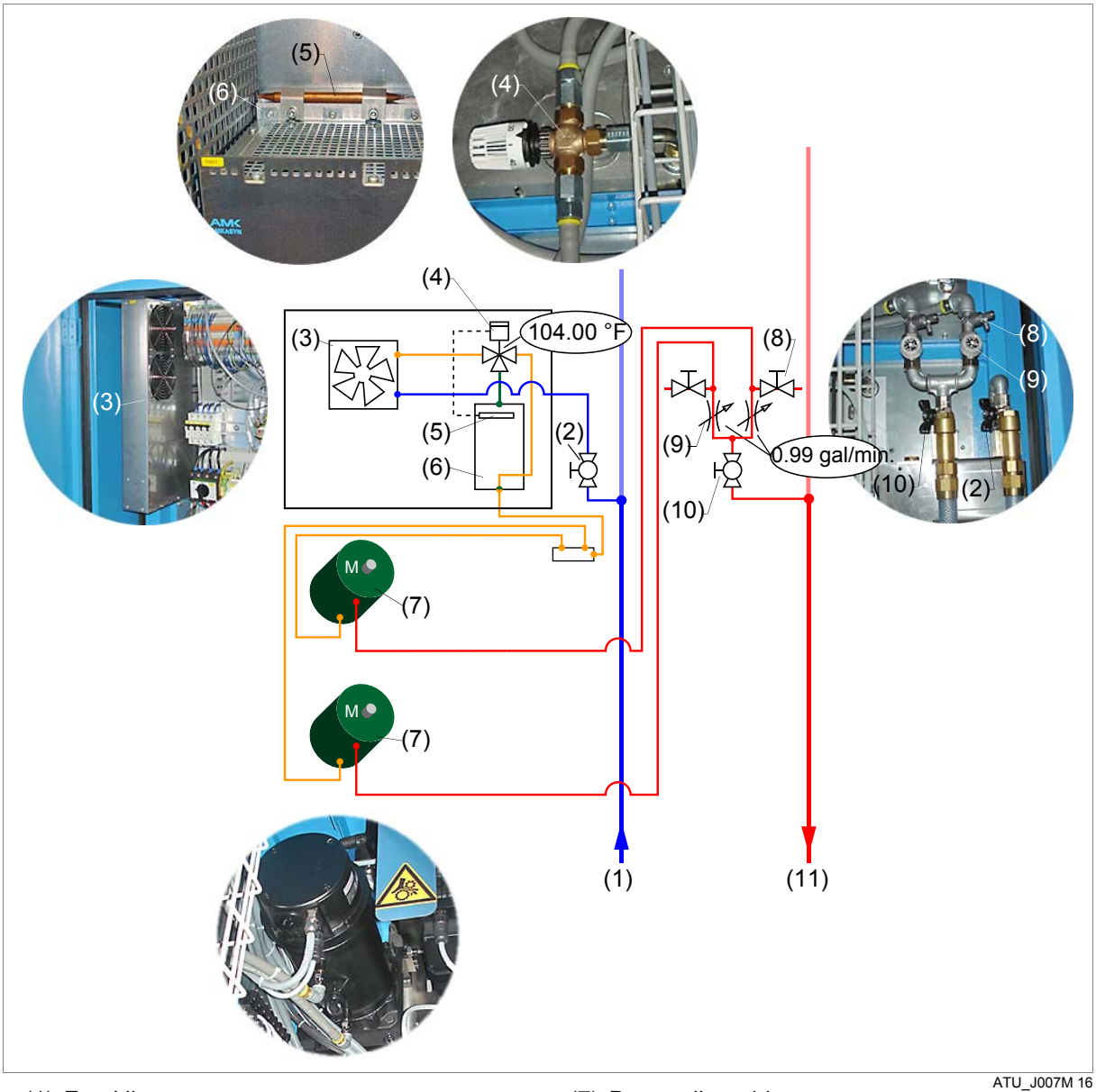

ATU_J007M 16

(1) Feed line
(2) Ball valve
(3) cooling unit
(4) Directional control valve
(5) Temperature sensor
(6) Cooling plate
(7) Draw rollers drive
(8) Venting tap
(9) Flow controller
(10) Ball valve
(11) Reverse line

Ventilation of the drive, see Chapt. 4.1.3 Bleed drive.

2.3 Bottom cutter shaft

The bottom cutters (4) of the cutting unit are mounted on the lower cutter shaft (3). The bottom cutters are driven at a fixed speed-advance by means of timing belts beginning at the draw roller (6) (Fig. 4).

Fig. 4 Lower cutter shaft and cutting unit

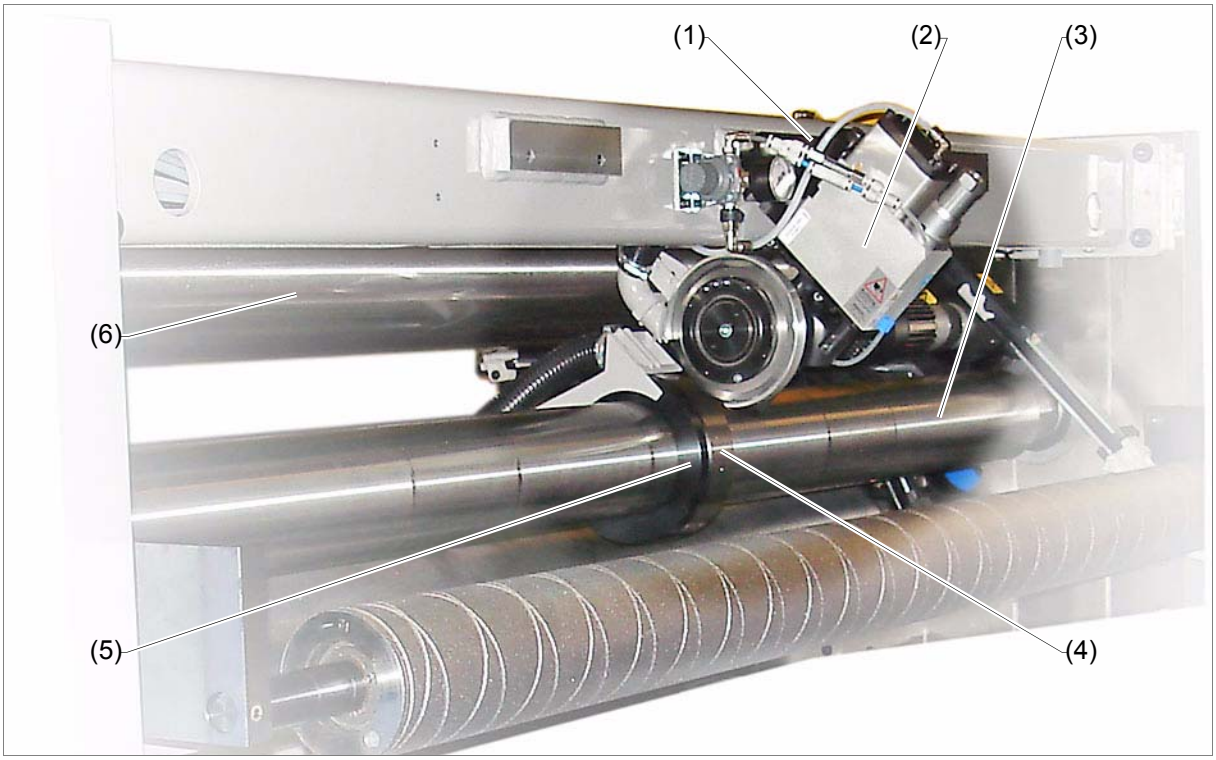

ATU_218_002_01

(1) Cutter retainer
(2) Cutter head with cutter (upper cutter)
(3) Lower cutter shaft
(4) Lower cutter(s)
(5) Setting collar
(6) Draw roller

2.4 Cutting unit

Note

Further information is found in the WIFAG/Dienes cutting unit documentation in the *Suppliers' documentation* file.

2.5 Draw roller

Together with the pressure rollers (7), the draw roller (1) transports and draws the printed web out of the printing couple (Fig. 5).
The draw roller is driven via a timing belt by a water-cooled drive on side II.
The web tension can be changed by adjusting the speed-advance of the draw roller.
Operation is automatic in production or manual for maintenance in the terminal mask Menu Test \ Draw rollers in accordance with Reg. 3 Control elements.
The speed is monitored by a resolver integrated in the drive.

Fig. 5 Draw roller

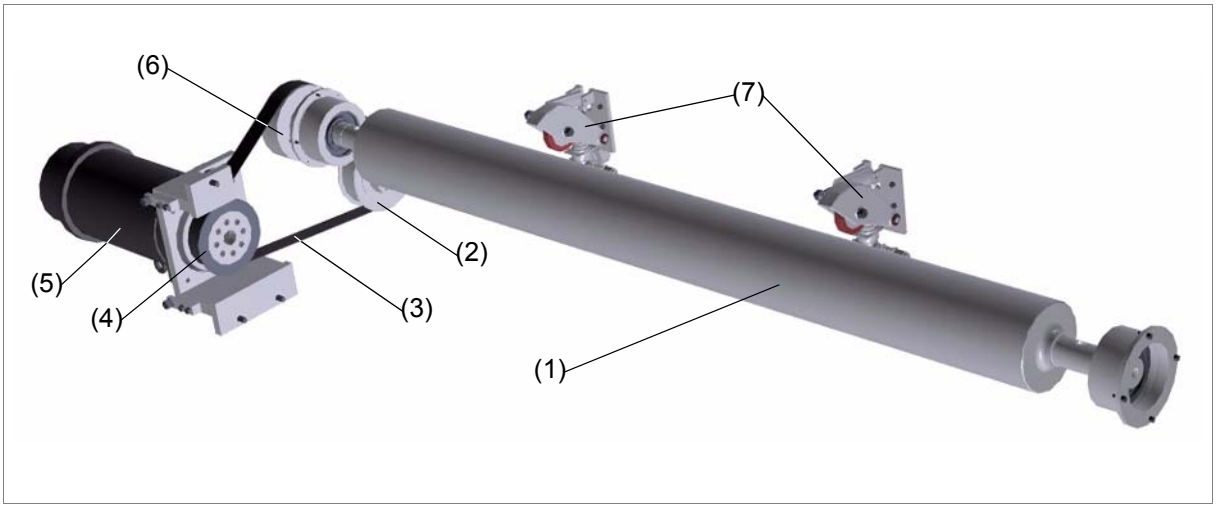

ATU_J005M

(1) Draw roller
(2) Timing belt pulley for lower cutter shaft
(3) Timing belt
(4) Timing belt pulley for drive
(5) drive
(6) Timing belt pulley for draw roller
(7) Pressure roller

2.6 Pressure roller

Together with the draw roller, the pressure rollers (Fig. 6) mounted on a cross-member serve as traction elements for the webs running into the angle-bar module. The pressure rollers (3) are pneumatically thrown onto the draw roller.
The contact pressure on the draw roller is set using a pressure regulator (6).

Fig. 6 Pressure roller

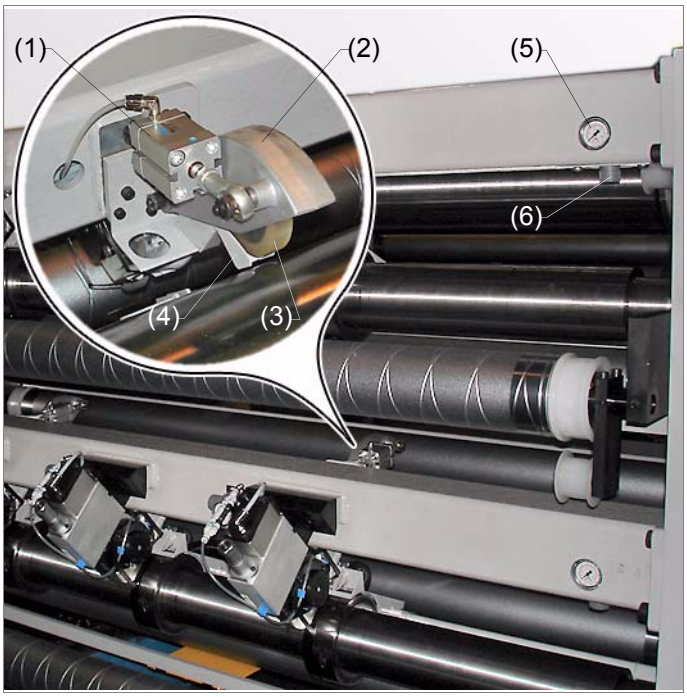

ATU_209_004_01

(1) Pneumatic cylinder
(2) housing
(3) Pressure roller
(4) Finger guard
(5) Pressure gauge
(6) pressure regulator

3 Replace components

Contents

This chapter contains the following information:

- Chapt. 3.1 WIFAG article numbers
- Chapt. 3.2 Replace pressure roller
- Chapt. 3.3 Replace shear cut knife holder
- Chapt. 3.4 Replace cutter
- Chapt. 3.5 Replace lower cutter
- Chapt. 3.6 Replace timing belt for draw roller / lower cutter roller
- Chapt. 3.7 Replace drive for draw roller / lower cutter roller

Specification

For safety reasons only the replacement work described in these operating instructions may be performed! All replacement work not described herein must be performed by qualified WIFAG personnel.

3.1 WIFAG article numbers

Tab. 1 Overview of components and accessories

Article	Obtainable only from WIFAG	Can be ordered from WIFAG
Drive for draw roller / lower cutter shaft	1278021	----------
Timing belt HTD1400-14M-40	A60608	----------
Pressure roller Ø 80 mm	1271398	----------
Shear cut knife holder	1296261	----------
Cutter Ø 130 mm	1269855	----------
Lower cutter(s)	1465969	----------

3.2 Replace pressure roller

Requirements

- Production group / function group at standstill

Materials needed

- Warning sign *Work is in progress!*
- Allen key set
- Appropriate fork wrenches

WARNING	**Risk of injury!** **Risk of crushing** due to sudden build-up of pressure! => Electrically disable function group (actuate pushbutton *SAFE-STOP*). => Place *Work in progress!* warning signs on the corresponding terminals and control panels. => Reduce operating pressure to 0 bar at all filter-regulator-lubricator units with the relevant pressure regulating valve. => Close or open the shut-off valve for the filter-regulator-lubricator unit only if the operating pressure at the pressure gauge indicates 0 bar. => Close the shut-off valves on the filter-regulator-lubricator unit.

Replace pressure roller

4. Set filter-regulator-lubricator unit to 0 bar (Chapt. 4.1.3 Setting the filter-regulator-lubricator unit in Reg. 8 Pneumatic system in the *System* file).
5. Loosen and remove shoulder screw (8) on the joint head (7).
6. Loosen nut (5) and shoulder screw (2) and remove along with washers (3) (6) and pressure roller (4).

> The pressure roller is removed.

7. Install new pressure roller (4) with shoulder screw (2), nut (5) and washers (3) (6) in housing (1) and tighten nut (5).
8. Mount joint head (7) with shoulder screw (8) on housing (1) and tighten shoulder screw (8).

9. Set filter-regulator-lubricator unit to 6.5 bar (Chapt. 4.1.3 Setting the filter-regulator-lubricator unit in Reg. 8 Pneumatic system in the *System* file).
10. Switch on angle-bar module at the associated safety switch (Chapt. 5.1 Switch current supply on and off in Reg. 2 Important for your safety).
11. Use the *SAFE-STOP* pushbutton to electrically enable; remove the *Work is in progress!* warning notice.

> The pressure roller is replaced.

Fig. 7 Pressure roller

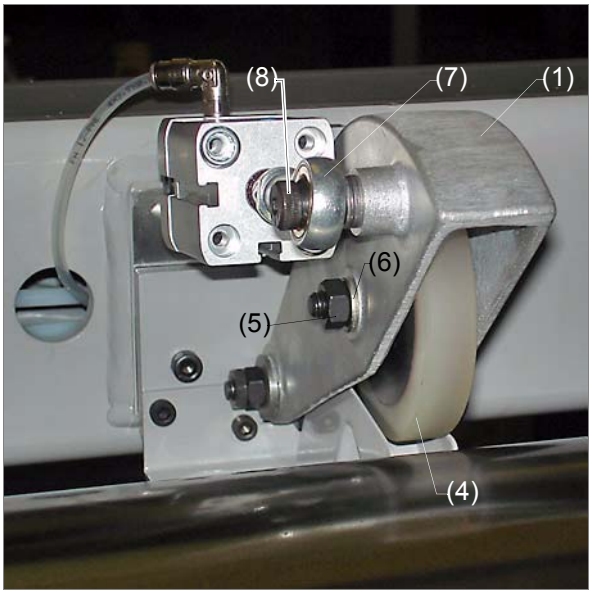

ATU_218_001_01

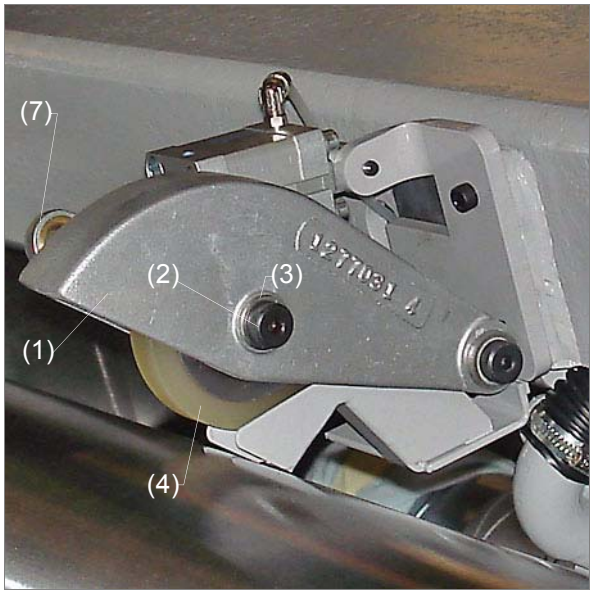

ATU_209_004_04

(1) housing
(2) Shoulder screw M8
(3) Washer 20x2
(4) Pressure roller
(5) Hex nut
(6) Washer 16x1.6
(7) Joint head
(8) Shoulder screw M6

3.3 Replace shear cut knife holder

Note

For further information see the documentation
for the cutting unit WIFAG/Dienes in the *supplier's documentation* file.

3.4 Replace cutter

Note

For further information see the documentation
for the cutting unit WIFAG/Dienes in the *supplier's documentation* file.

3.5 Replace lower cutter

Note

For further information see the documentation
for the cutting unit WIFAG/Dienes in the *supplier's documentation* file.

3.6 Replace timing belt for draw roller / lower cutter roller

Requirements

- Production group / function group at standstill

Materials needed

- Warning sign *Work is in progress!*
- Allen key set
- Cabinet key
- Rope

⚠ WARNING	**Risk of injury!** **Risk of being trapped and crushed** by rotating timing belt pulleys and timing belt! => Electrically disable function group (actuate pushbutton *SAFE-STOP*). => Place *Work in progress!* warning signs on the corresponding terminals and control panels.

Removing timing belt

1. Switch off the power supply to the angle-bar module at the associated safety switch and secure against being switched back on (Chapt. 5.1 Switch current supply on and off in Reg. 2 Important for your safety).
2. Open the door (1) side II and the panel (2) with the cabinet key (Fig. 8).
3. Unscrew the retaining screws (4) and remove the upper enclosure (3).
4. Secure the drive (7) to a crane or block and tackle and pull up until the tightening screws (5) are relieved of load.
5. Loosen retaining screws (6) on the motor plate and slightly tighten.
6. Screw out the tightening screws (5) until the timing belt (8) is fully relaxed.
7. Lift timing belt (8) off the timing belt pulleys (9).

> The timing belt is removed.

Install timing belt

8. Place the new timing belt (8) onto timing belt pulleys.
9. Turn in the tightening screw (5) until the timing belt (8) is relaxed to 77 - 83 Hz as described in Chapt. 4.12 Measuring and setting timing belt tensions in Reg. 6 Maintenance.

10. Tighten retaining screws (6) on the motor unit.
11. Remove the crane or block and tackle.
12. Mount the upper enclosure (3) and tighten all retaining screws (4).
13. Close the door (1) side II and the panel (2) with the cabinet key.
14. Set filter-regulator-lubricator unit to 6.5 bar (Chapt. 4.1.3 Setting the filter-regulator-lubricator unit in Reg. 8 Pneumatic system in the *System* file).
15. Switch on the angle-bar module at the associated safety switch (Chapt. 5.1 Switch current supply on and off in Reg. 2 Important for your safety).
16. Use the *SAFE-STOP* pushbutton to electrically enable; remove the *Work is in progress!* warning notice.

> The timing belt is now replaced.

17. After a production, check the timing belt tension of the new timing belt (8) again and adjust if necessary.

Fig. 8 Procedure for replacing timing belt

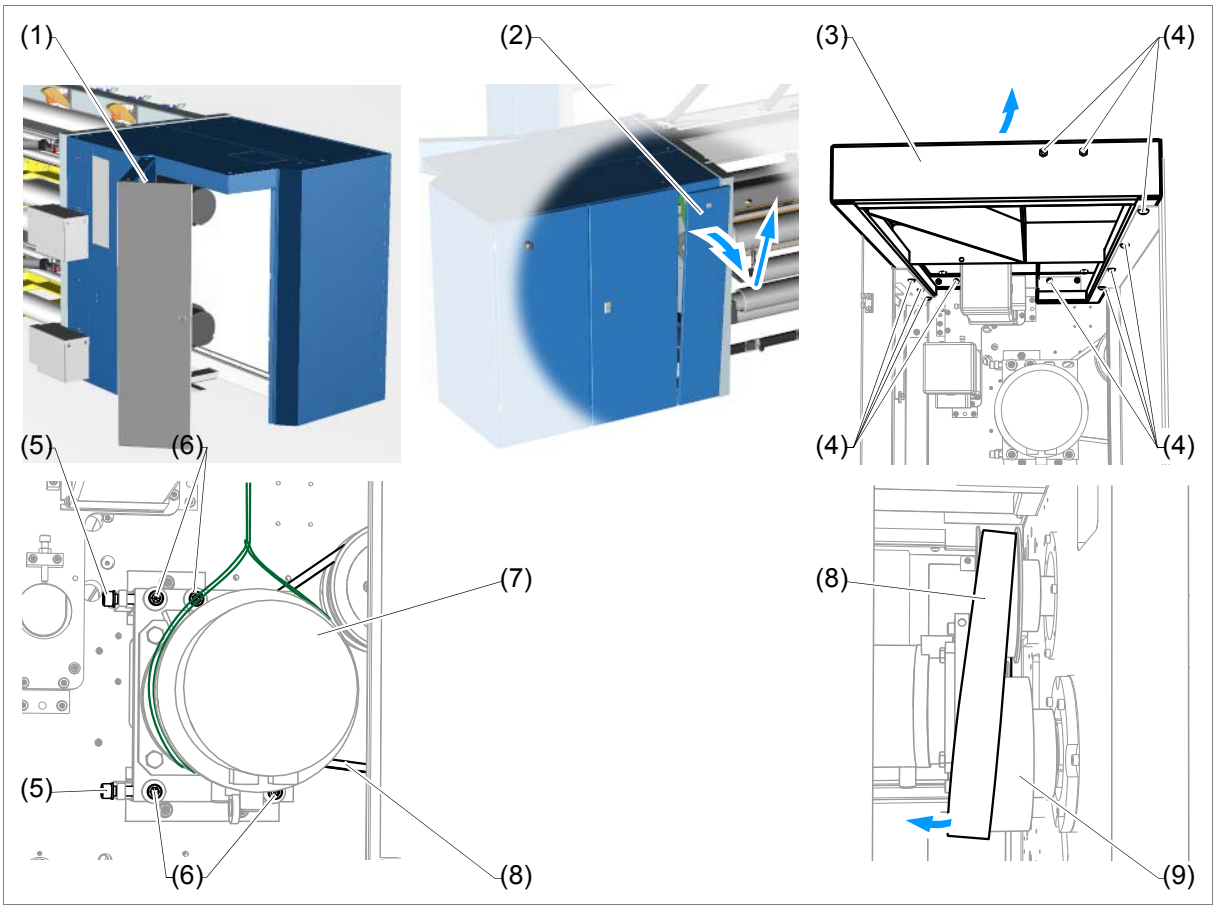

(1) Door SII
(2) Panel
(3) Upper enclosure
(4) Retaining screws
(5) Tensioning screw
(6) Motor plate retaining screw
(7) drive
(8) Timing belt
(9) Timing belt pulley

3.7 Replace drive for draw roller / lower cutter roller

Requirements

- Production group / function group at standstill

Materials needed

- *WIFAG electrical circuit diagram R*
- Warning sign *Work is in progress!*
- Multimeter
- Allen key set
- Supplied measuring device
- Torque wrench
- Rope
- Bucket
- Protective rubber gloves
- Soft cloth
- Cleaning agent
- Molykote BR 2

⚠ WARNING	**Risk of injury!** **Risk of being trapped and crushed** by rotating timing belt pulleys and timing belt! => Electrically disable function group (actuate pushbutton *SAFE-STOP*). => Place *Work in progress!* warning signs on the corresponding terminals and control panels.
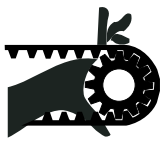	

Drive removal

1. Switch off the power supply to the angle-bar module at the associated safety switch and secure against being switched back on (Chapt. 5.1 Switch current supply on and off in Reg. 2 Important for your safety).
2. Open the door (1) side II and the panel (2) with the cabinet key (Fig. 9).
3. Electrically disconnect drive (8) (Chapt. 2.2 Replacing drives in Reg. 11 Electrical setting and commissioning instructions in the *System* file).
4. Disconnect the drive cooling hoses (8).
5. Drain the remaining cooling water out of the hoses into a bucket.
6. Secure the drive (8) to a crane or block and tackle and pull up until the adjusting screws (5) are relieved of load.

7. Loosen retaining screws (6) on the motor plate (7) and slightly tighten.
8. Screw out the tightening screws (5) until the timing belt (9) is fully relaxed.

WARNING	**Risk of injury!** **Danger of crushing** if drive falls down. Weight is 70 kg! => Take precautions that the drive(s) does not fall when being replaced.

9. Loosen the retaining screws (10) on drive (8) and remove with the drive.
10. Remove the coupling unions from the water cooling on the drive.
11. Loosen the tightening screws (13) on the grip-ring set (12) one after the other in several steps.
12. Separate the grip-ring set (12) if necessary using the jacking screws.
13. Pull off the timing belt pulley (11) and the grip-ring set (12) from the drive shaft (14).
14. Remove the grip-ring set of the timing belt pulley and dismantle.
15. Clean the grip-ring set, the timing belt pulley and the drive shaft; degrease and rub dry with a soft cloth.

> This completes drive removal.

Fig. 9 Procedure for replacing drive

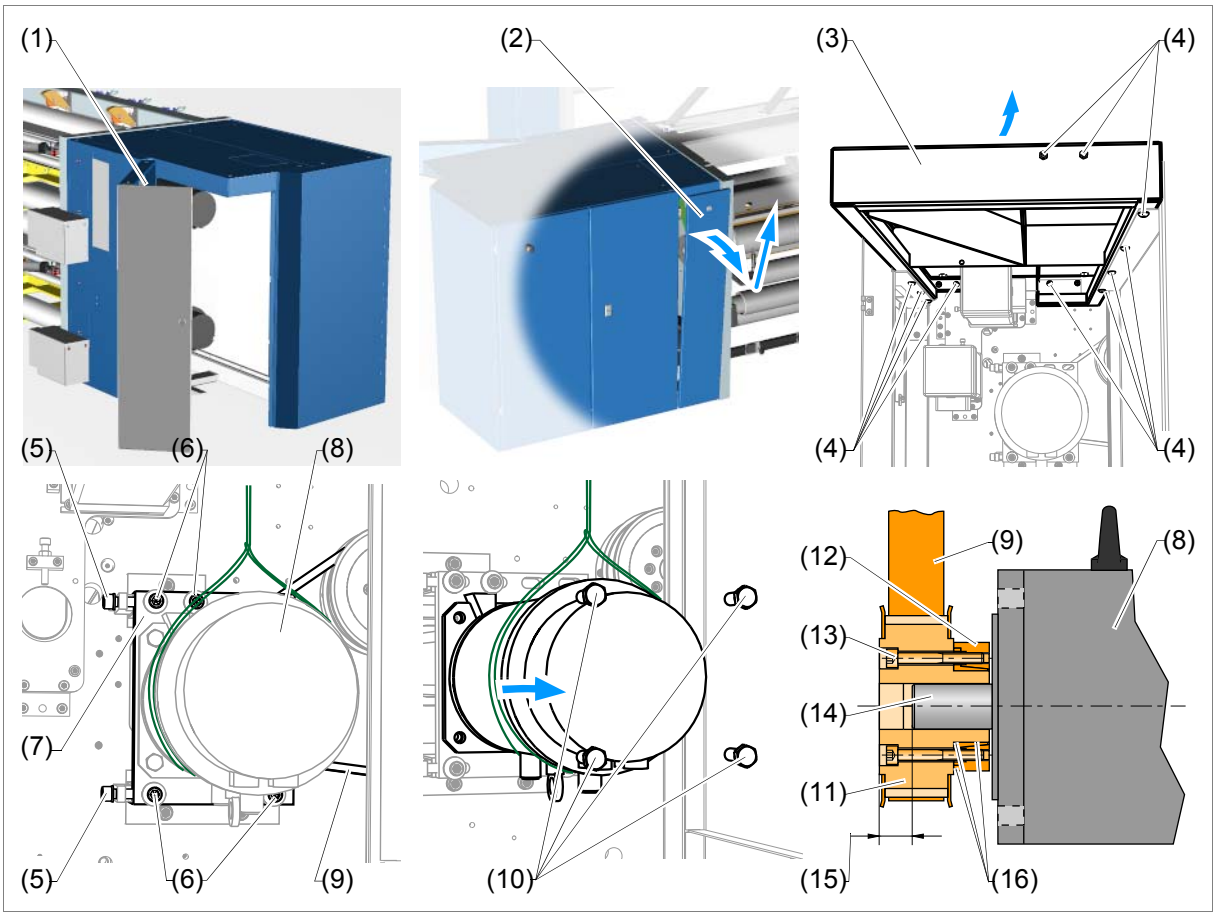

(1) Door SII
(2) Panel
(3) Upper enclosure
(4) Retaining screws
(5) Tensioning screw
(6) Motor plate retaining screw
(7) Motor plate
(8) drive
(9) Timing belt
(10) Retaining screws of drive
(11) Timing belt pulley
(12) Grip-ring set
(13) Tensioning screw
(14) Drive shaft
(15) Reference dimension = **21 mm**
(16) Grease-free areas

Install drive

16. Grease the conical surfaces on the grip-ring set (12) and on the contact surface of the screw heads (13) with Molykote BR 2 (Fig. 9).

Specification
The contact surfaces (16) shown in (Fig. 9) must remain grease free!

17. Loosely screw together the timing belt pulley (11) and the grip-ring set (12).
18. Push the timing belt pulley (11) with the grip-ring set (12) onto the drive shaft (14) of the new drive and set the reference dimension (15) to 21 mm.
19. Tighten the tightening screws (13) on the grip-ring set (12) one after the other and in several steps until all tightening screws (13) reach the full tightening torque of 29 Nm.
20. Mount the coupling unions of the water cooling on the drive.

WARNING	**Risk of injury!** **Danger of crushing** if drive falls down. Weight is 70 kg! => Take precautions that the drive(s) does not fall when being replaced.

21. Mount the drive (8) in the motor plate (7) and at the same time place the timing belt (9) on the timing belt pulleys and align.
22. Tighten the retaining screws (10).
23. Turn in the tightening screw (5) until the timing belt (8) is relaxed to 77 - 83 Hz as described in Chapt. 4.12 Measuring and setting timing belt tensions in Reg. 6 Maintenance.
24. Tighten retaining screws (6) on the motor unit.
25. Remove the crane or block and tackle.
26. Electrically connect drive (7). (Chapt. 2.2 Replacing drives in Reg. 11 Electrical setting and commissioning instructions in the *System* file)
27. Attach the cooling hoses and vent the drive (8) (Chapt. 4.1.3 Bleed drive).
28. Mount the upper enclosure (3) and tighten all retaining screws (4).
29. Close the door (1) side II and the panel (2) with the cabinet key.
30. Switch on the angle-bar module at the associated safety switch (Chapt. 5.1 Switch current supply on and off in Reg. 2 Important for your safety).
31. Use the *SAFE-STOP* pushbutton to electrically enable; remove the *Work is in progress!* warning notice.

> This completes drive replacement.

4 Basic settings

Contents

This chapter contains the following information:

- Chapt. 4.1 Setting
- Chapt. 4.2 Calibration
- Chapt. 4.3 Testing

Specification

For safety reasons only the adjustment work described in these operating instructions may be performed! All adjustment work not described herein must be performed by qualified WIFAG personnel.

4.1 Setting

4.1.1 Set operating pressure of the pressure roller

Requirements

- Pressure roller in position *ON*.

Materials needed

- None

⚠ WARNING	**Risk of injury!** **Risk of crushing** by throwon movement of the pressure rollers! => Electrically disable function group at the nearest control panel with pushbutton *SAFE-STOP*. => Place *Work in progress!* warning signs on the corresponding terminals and control panels. => Exercise caution when working with the pressure rollers.

Note

All pressure rollers (2) per crossbeam (3) are adjusted by means of a pressure regulator (5) (Fig. 10).

=> Turn pressure regulator (5) until pressure gauge (4) reads 2.0 - 2.5 bar.

Fig. 10 Set pressure rollers operating pressure

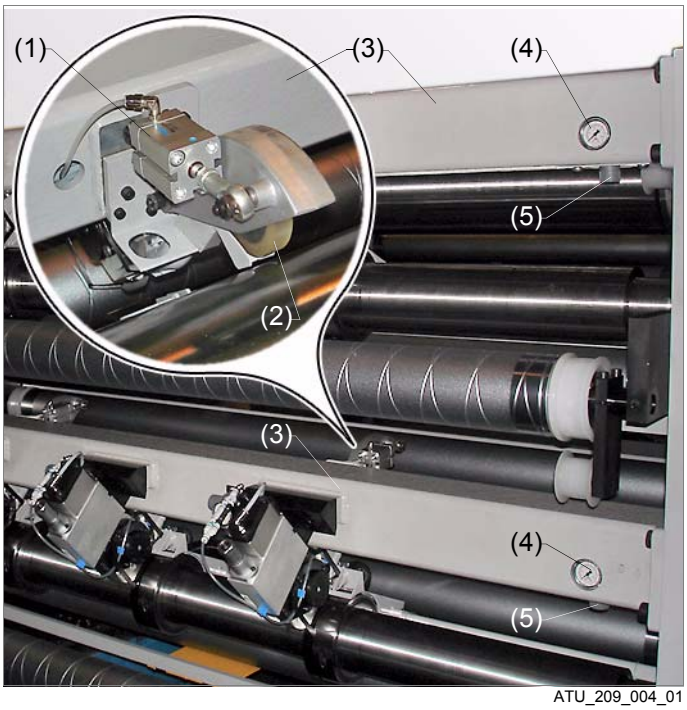

(1) Pneumatic cylinder
(2) Pressure roller
(3) Crossbeam
(4) Pressure gauge
(5) pressure regulator

4.1.2 Set operating pressure of the cutter

Note

Further information is found in the WIFAG/Dienes cutting unit documentation in the *Suppliers' documentation* file.

4.1.3 Bleed drive

Materials needed

- Supplied filling hose with quick-release coupling
- Bucket
- Water connection (normal supply circuit)
- Hose extension for the water connection

⚠ WARNING	**Risk of injury!** **Risk of being trapped and crushed** by rotating cylinders! => Electrically disable function group (actuate pushbutton *SAFE-STOP*). => Place *Work in progress!* warning signs on the corresponding terminals and control panels.

1. Attach connection line (2) (Fig. 12).
2. Attach venting hose (1) to the reverse line connector. Put the other end of the hose in a bucket.
3. As soon a liquid instead of air drains, the drive is vented.
4. Remove venting hose and attach reverse line.
5. Electrically enable function group with the *SAFE-STOP* pushbutton.
6. Remove *Work is in progress!* warning sign.

Fig. 11 Cooling connections on the drive

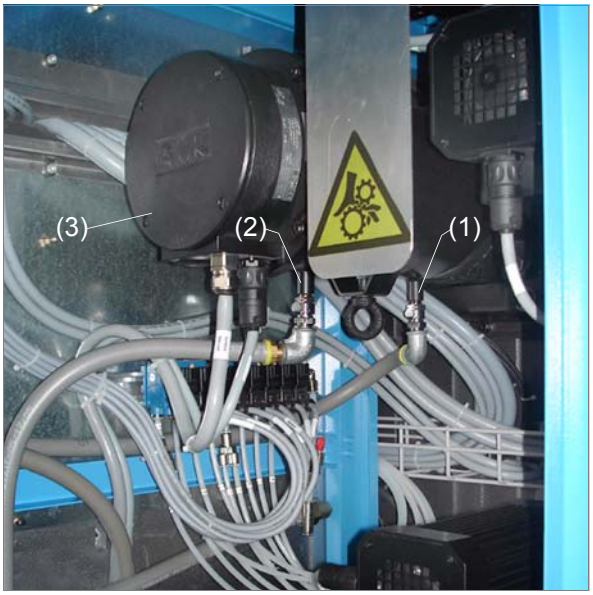

ATU_173_001_02

(1) Reverse line
(2) Connection line from cooling plate
(3) drive

Fig. 12 Vent the cooling circuit

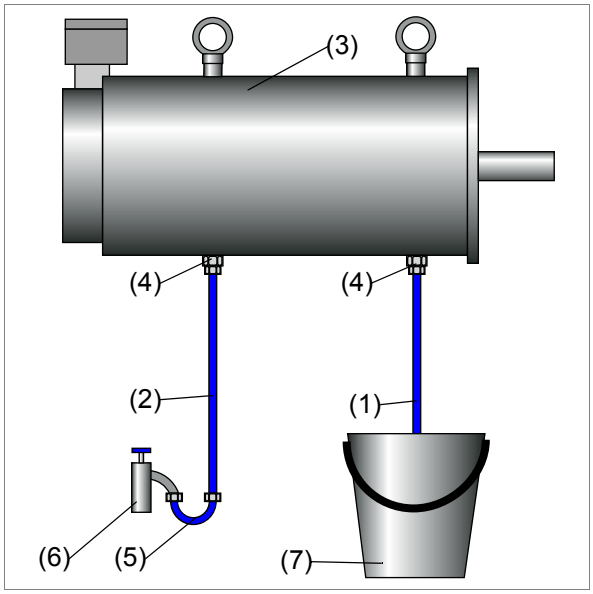

ATU_J008M 12

(1) Bleeding hose return
(2) Connection line from cooling plate
(3) drive
(4) Quick-release coupling
(5) Hose extension
(6) Water valve
(7) Bucket

4.2 Calibration

Note

No calibrations are necessary on this sub-function group.

4.3 Testing

Note

Operation according to Chapt. 11.1 Draw roller tests in Reg. 4 Operation.

10 Web monitoring

1 Overview **10.3**

2 Construction and function **10.5**
2.1 Web break detector **10.5**

3 Replace components **10.7**
3.1 WIFAG article numbers **10.7**
3.2 Replacing the reflected light sensor for the web-break detector **10.8**

4 Basic settings **10.9**
4.1 Setting **10.10**
4.1.1 Set position of the reflected light sensor 10.10
4.2 Calibration **10.12**
4.3 Testing **10.12**
4.3.1 Test reflected light sensors 10.12
4.3.2 Testing the web monitoring system 10.13

1 Overview

Note

(Fig. 1) provides a sample schematic diagram. An overview of customer-specific web monitoring is found in the webbing diagrams.

Fig. 1 Overview of web monitoring (example)

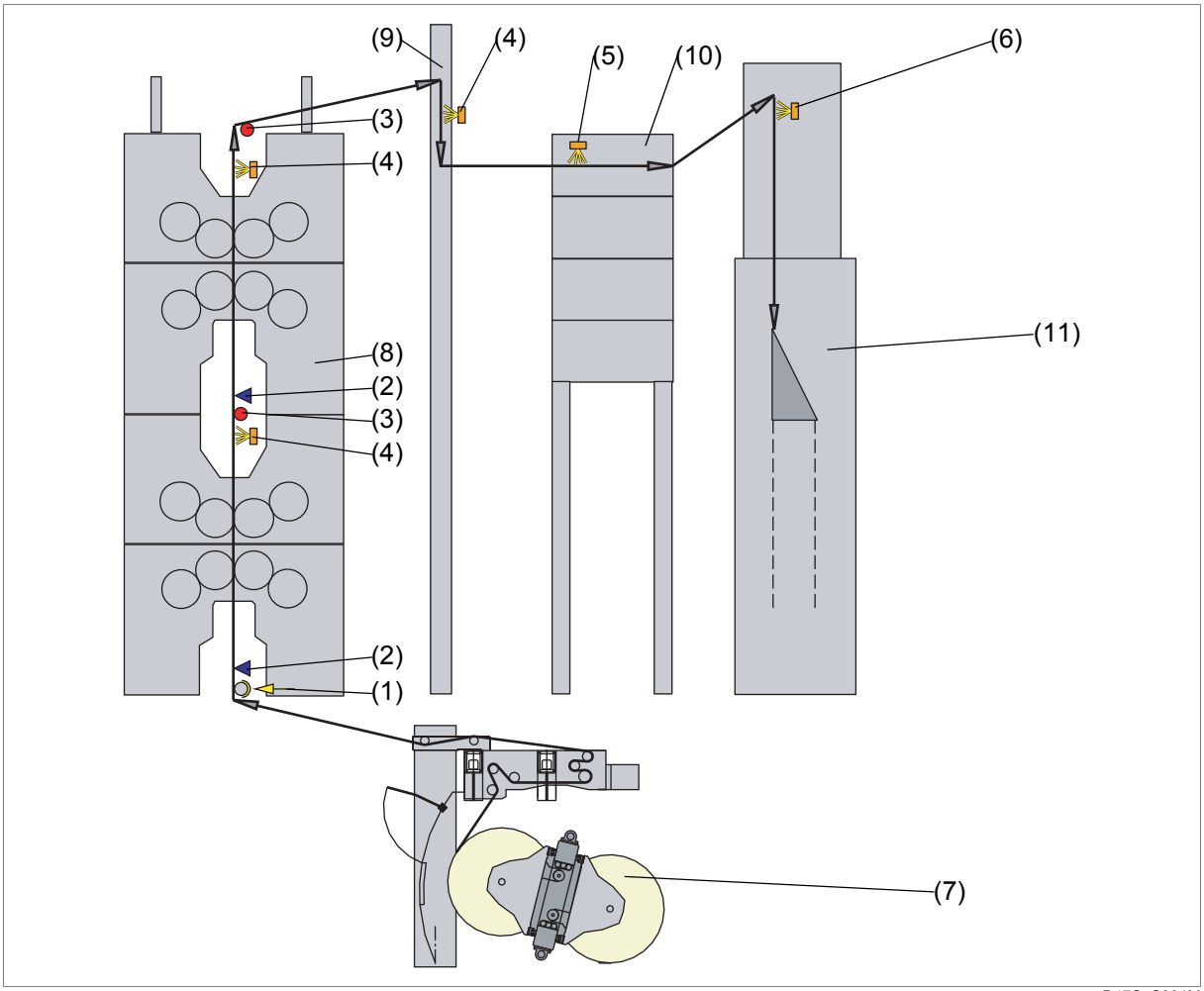

(1) Carrier roller brake (Reg. 19 Web monitoring in the *Printing unit* file)
(2) Web severer (Reg. 19 Web monitoring in the *Printing unit* file)
(3) Anti-reversing device (Reg. 19 Web monitoring in the *Printing unit* file)
(4) Web break detector (Reg. 19 Web monitoring in the *Printing unit* file)
(5) Supplementary web break detector (Chapt. 2.1 Web break detector)
(6) Web break detector (Reg. 9 Web and copy monitoring in the *Folder* file)
(7) Dérouleur
(8) Printing tower
(9) Pillar
(10) Angle-bar module
(11) Folder

The web is monitored at the following points on the angle-bar module (Fig. 2):

- after the draw roller in the upper angle-bar system
- after the draw roller in the lower angle-bar system

Fig. 2 Web monitoring on angle-bar module right (example)

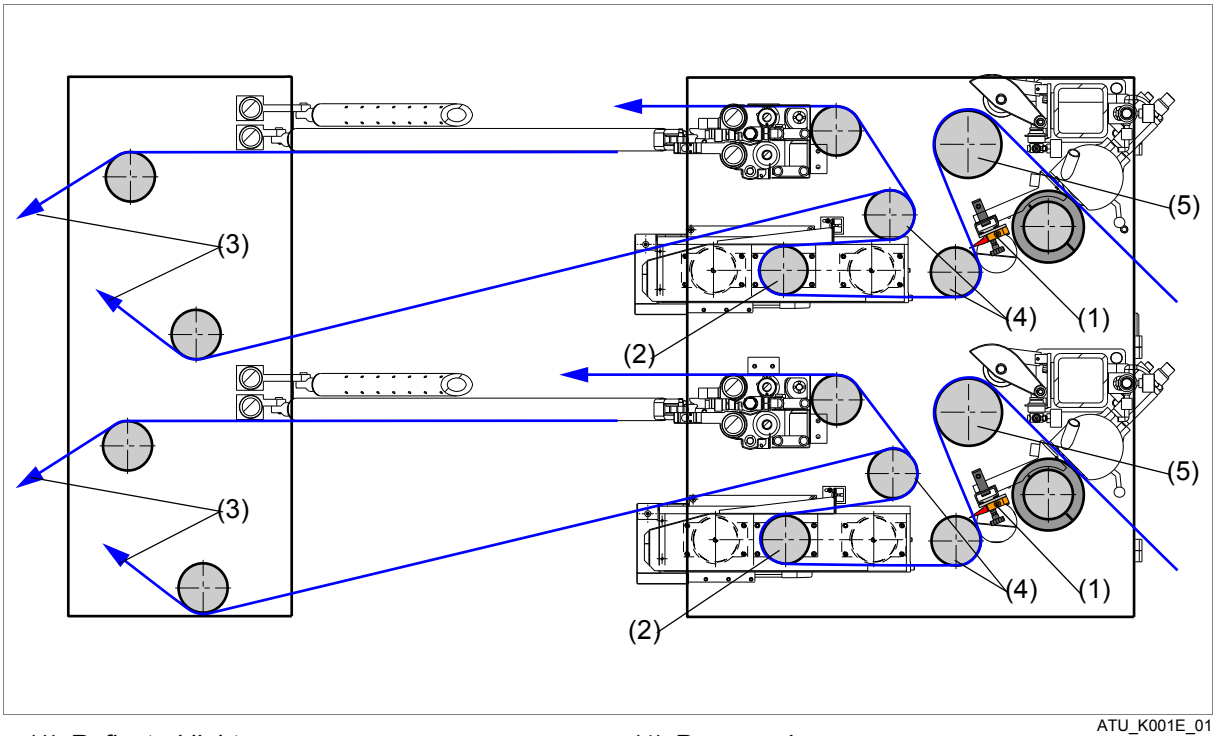

ATU_K001E_01

(1) Reflected light sensor
(2) Ribbon register
(3) Idler rollers
(4) Paper web
(5) Draw roller

2 Construction and function

Contents

This chapter contains the following information:

• Chapt. 2.1 Web break detector

2.1 Web break detector

The web is monitored by reflected light sensors (1) (Fig. 3).
The reflected light sensors (1) can be laterally moved in the guide rails (2). The reflected light sensors (1) are connected to the WISIBOX.

Note

Further information about the WISIBOX can be found in Chapt. 2.4.2 WiSiBox in Reg. 7 Electrical and control systems in the *System* file.

Fig. 3 Reflected light sensor

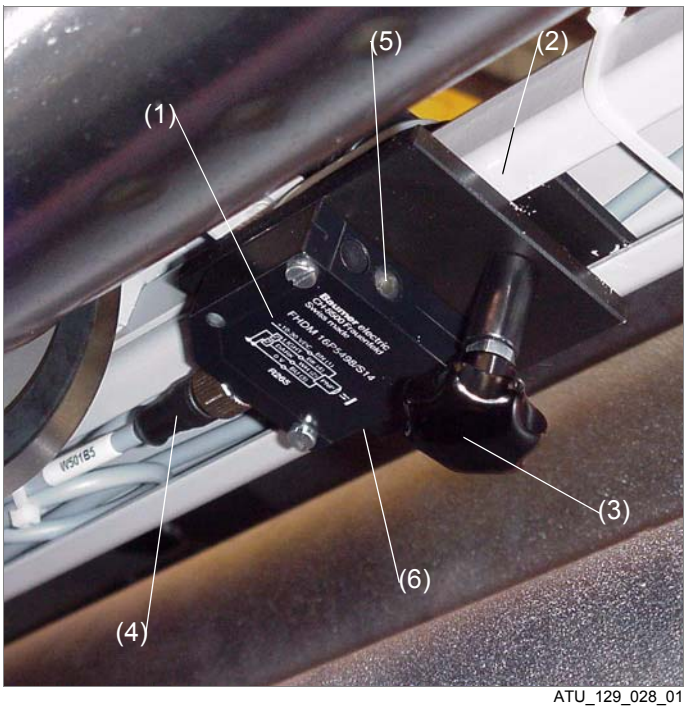

ATU_129_028_01

(1) Reflected light sensor
(2) Guide rail
(3) Handle for arrester
(4) Electrical connector plug
(5) LED (status display)
(6) Optical element (on the front side)

With the reflected light sensors (1) the web break detector monitors:

- the correct paper guide
- possible web breaks
- soiling of the reflected light sensors
- defects in the reflected light sensors

All web break detectors participating in the production are activated:
- after 10 seconds at a machine speed of > feed-in speed
- Or at a machine speed of ≥ 3000 cyl. rev/hr.

Paper guide monitoring

This function can be activated or deactivated on the control console. However, this is only possible if the machine speed of system parts participating in the production is 0 cyl. rev/hr. When loading a new production, this function is automatically activated. After the “faster” command, an incorrect paper guide triggers the “stop” command for the production.

Web break monitoring (printing unit / pillar)

A web break triggers the following elements or commands:
- *SAFE-STOP* command for the concerned production group.
- *PRINTING OFF* command for the concerned production group.
- Beginning at a machine speed of ≥ 10,000 cyl. rev./hr the concerned web severers are triggered.
- Beginning at a machine speed of ≥ 10,000 cyl. rev./hr the anti-reversing devices are triggered.
- Beginning at a machine speed of ≥ 10,000 cyl. rev./hr the carrier roller brakes are triggered.

The web break monitoring is deactivated.
- At machine standstill or at a machine speed of < 3000 cyl. rev/h.

Web break monitoring (angle-bar module)

A web break triggers the following elements or commands:
- *SAFE-STOP* command for the concerned production group.
- *PRINTING OFF* command for the concerned production group.
- Beginning at a machine speed of ≥ 20,000 cyl. rev/hr the concerned web severers are triggered.

Soiling monitoring of the reflected light sensors

A dirty reflected light sensor (1) triggers the *STOP* command for the corresponding web or production group (also in standstill).

Defect monitoring of the reflected light sensors

A defective reflected light sensor (1) triggers the *STOP* command for the corresponding web or production group (also in standstill).

3 Replace components

Contents

This chapter contains the following information:

- Chapt. 3.1 WIFAG article numbers
- Chapt. 3.2 Replacing the reflected light sensor for the web-break detector

Specification

For safety reasons only the replacement work described in these operating instructions may be performed! All replacement work not described herein must be performed by qualified WIFAG personnel.

3.1 WIFAG article numbers

Tab. 1 Overview of components and accessories

Article	Obtainable only from WIFAG	Can be ordered from WIFAG
Reflected light sensor for web-break detector	----------	A4-04150EW

3.2 Replacing the reflected light sensor for the web-break detector

Requirements

- Production group at standstill
- Read Chapt. 8.9 Carrying out repairs in Reg. 2 Important for your safety in the *System* file.

Materials needed

- Screwdriver no. 4
- Matt black paper strip
- Warning signs *Work is in progress!*
- Chapt. 4.3.1 Test reflected light sensors

⚠ WARNING	**Risk of injury!** **Risk of being trapped and crushed** by rotating rollers! => De-allocate function group from the production group at the control panel and electrically disable (push the *SAFE-STOP* pushbutton). => Place *Work in progress!* warning signs on the corresponding terminals and control panels.

Replacing the reflected light sensor

1. Withdraw electrical connector plug (2) (Fig. 3).
2. Loosen retaining screws (3) and remove reflected light sensor (1).
3. Mount new reflected light sensor (1) and tighten retaining screws (3).
4. Connect electrical connector plug (2).

Test the reflected light sensor

5. Test reflected light sensor (1) (Chapt. 4.3.1 Test reflected light sensors).
6. Electrically enable function group with the *SAFE-STOP* pushbutton.
7. Remove *Work is in progress!* warning sign.

> The reflected light sensor is now replaced.

4 Basic settings

Contents

This chapter contains the following information:

- Chapt. 4.1 Setting
- Chapt. 4.2 Calibration
- Chapt. 4.3 Testing

Specification

For safety reasons only the adjustment work described in these operating instructions may be performed! All adjustment work not described herein must be performed by qualified WIFAG personnel.

4.1 Setting

4.1.1 Set position of the reflected light sensor

Requirements

- Reflected light sensor is clean
- Infrared light beam is visible

Materials needed

- Webbing diagrams
- Matt black paper strip
- Cord
- Warning signs *Work is in progress!*
- Chapt. 4.3.1 Test reflected light sensors

⚠ WARNING	**Risk of injury!** **Risk of being trapped and crushed** by rotating rollers! => De-allocate function group from the production group at the control panel and electrically disable (push the *SAFE-STOP* pushbutton). => Place *Work in progress!* warning signs on the corresponding terminals and control panels.

Set position of the reflected light sensor

1. Slightly tension drawn-in web (4) (Fig. 4).

If no web (4) is drawn in:

=> Feed in cord in the appropriate section in accordance with the webbing diagrams.

2. Slightly loosen handle (2).
3. Move reflected light sensor (1) accordingly.
4. Tighten handle (2).

Test the reflected light sensor

5. Test reflected light sensors (Chapt. 4.3.1 Test reflected light sensors).
6. Electrically enable function group with the *SAFE-STOP* pushbutton.
7. Remove *Work is in progress!* warning sign.

> The position is set.

Fig. 4 Set position of the reflected light sensor

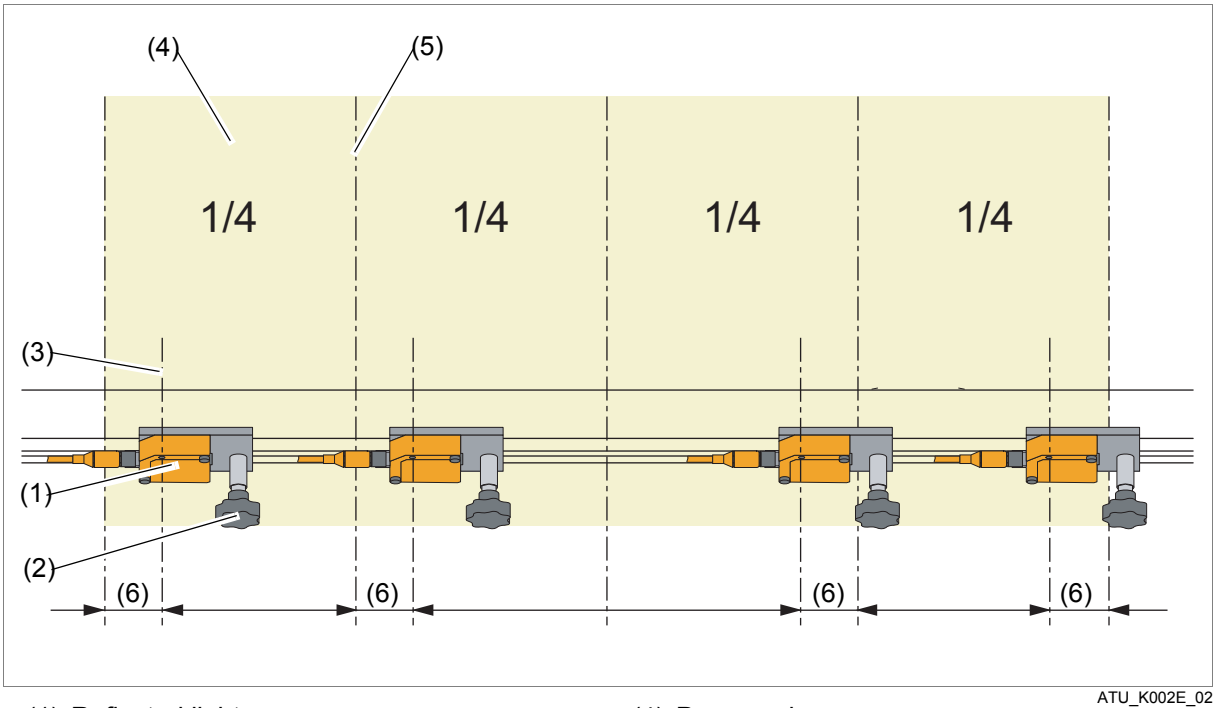

(1) Reflected light sensor
(2) Handle for arrester
(3) Optical axis
(4) Paper web
(5) ¼ web separation
(6) Distance 40 mm

4.2 Calibration

Note

No calibrations are necessary on this sub-function group.

4.3 Testing

4.3.1 Test reflected light sensors

Requirements

- Reflected light sensor is clean
- Infrared light beam is visible

Materials needed

- Matt black paper strip
- Warning signs *Work is in progress!*

⚠ WARNING	**Risk of injury!** **Risk of being trapped and crushed** by rotating rollers! => De-allocate function group from the production group at the control panel and electrically disable (push the *SAFE-STOP* pushbutton). => Place *Work in progress!* warning signs on the corresponding terminals and control panels.

1. Hold matt black paper strip (5) according to the distances specified in (Fig. 5) in front of the reflected light sensor (1) and check the status display (2).

If the result specified in (Fig. 5) is not achieved:

The reflected light sensor (1) is not correctly set or not connected.

=> Check the power supply connection.

=> Carry out another function check.

2. Electrically enable function group with the *SAFE-STOP* pushbutton.
3. Remove *Work is in progress!* warning sign.

Fig. 5 Function check

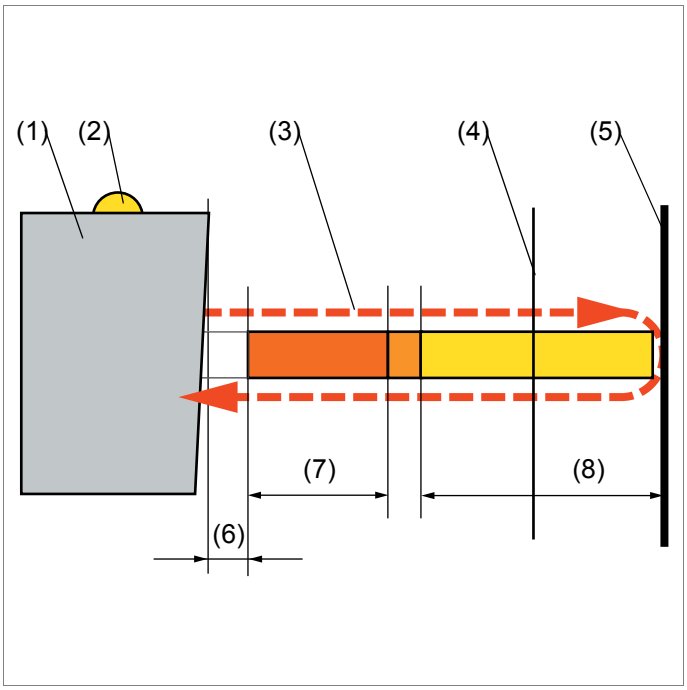

CWS_033

(1) Reflected light sensor
(2) LED (status display)
(3) Infrared light beam
(4) Paper web
(5) Matt black paper strip
(6) Distance 0 - 5 mm:
LED not lit = *OFF* or paper not in measuring range
(7) Distance 5 - 15 mm:
LED flashes = reflected light sensor is dirty
(8) Distance 20 - 100 mm:
LED continuously lit = paper in normal measuring range

4.3.2 Testing the web monitoring system

Note

Function check of the web monitoring system according to Chapt. 6.1 Web monitoring test in Reg. 4 Operation in the *Anlage* file.

11 Angle-bar system

1 Overview **11.3**

2 Construction and function **11.4**
2.1 Angle bars **11.5**
2.2 Angle-bar drive **11.9**
2.3 Blast air **11.10**
2.4 Right-angle web lead rollers (optional) **11.11**

3 Replace components **11.13**
3.1 WIFAG article numbers **11.13**
3.2 Replace angle bar drive timing belt **11.14**
3.3 Replace angle bar drive **11.17**
3.4 Replace duct fan **11.21**

4 Basic settings **11.23**
4.1 Setting **11.23**
4.1.1 Set timing belt tension 11.23
4.2 Referencing **11.23**
4.3 Testing **11.23**

1 Overview

For each angle-bar module a maximum of two angle-bar systems (Fig. 1) can be installed.
With the angle-bar system the ribbons of the production mode to be processed are sorted accordingly. To turn and align the indirect ribbons on the intended formers, the angle bars (2) can be automatically moved over the entire wall-to-wall area.
In accordance with the production mode, the angle bars can be moved by hand when the machine is at standstill. The angle bars are moved in just a few steps and without tools.

Fig. 1 Overview of angle-bar system

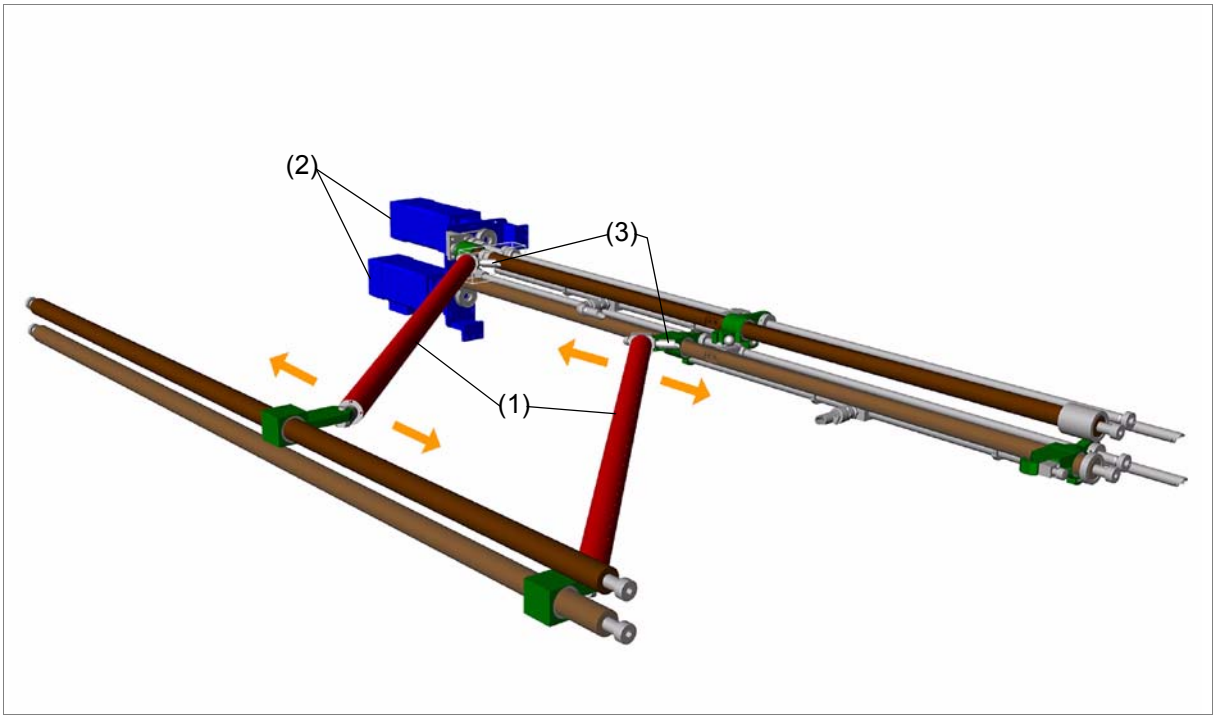

ATU_L001M_02.

(1) Angle bars (Chapt. 2.1 Angle bars)
(2) Angle-bar drives (Chapt. 2.2 Angle-bar drive)
(3) Blast air connections (Chapt. 2.3 Blast air)

2 Construction and function

Contents

This chapter contains the following information:

- Chapt. 2.1 Angle bars
- Chapt. 2.2 Angle-bar drive
- Chapt. 2.3 Blast air

2.1 Angle bars

Two angle bars are installed for each angle-bar system.

- The top angle bar (leading) takes the ribbon to be turned (Fig. 2).

Fig. 2 Leading angle bar

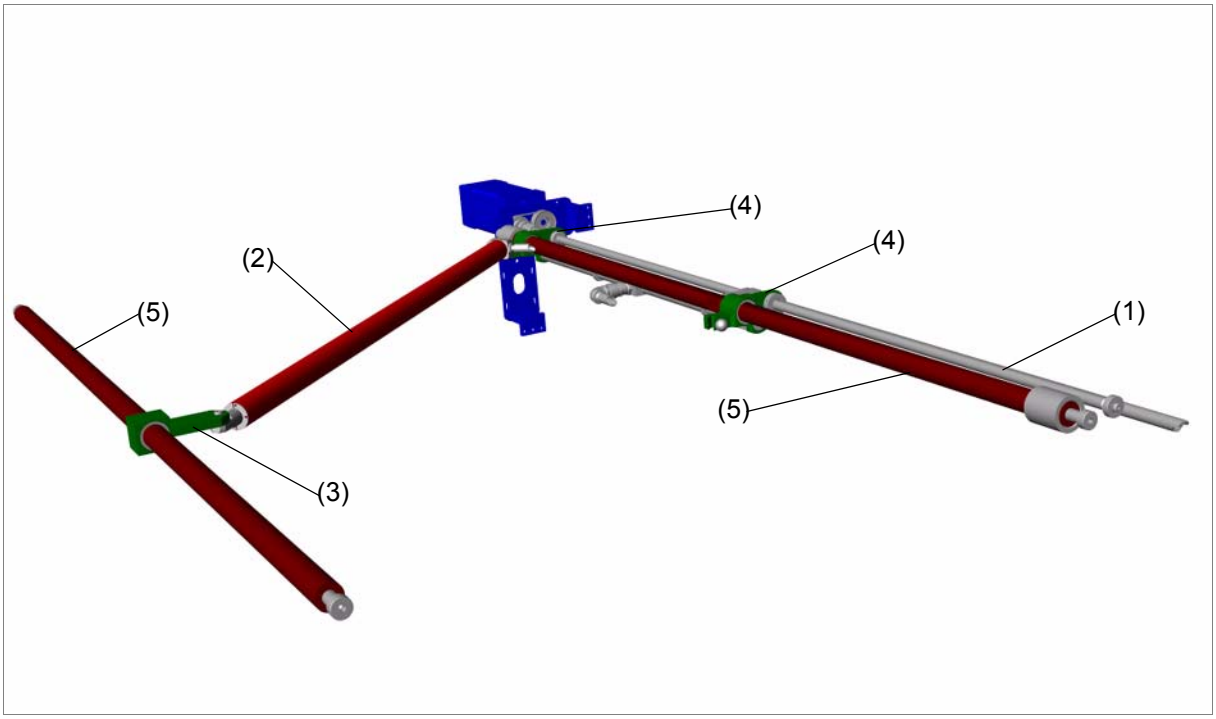

ATU_L004M_02

(1) Adjustment spindle
(2) Leading angle bar
(3) Holder
(4) Holder with quick-action connector
(5) Cross-member guides

- The bottom angle bar (trailing) further guides the turned ribbon to the position which is required for the production mode (Fig. 3).

The angle bar (2) is attached on both sides to guided holders (3) (4).

Fig. 3 Trailing angle bar

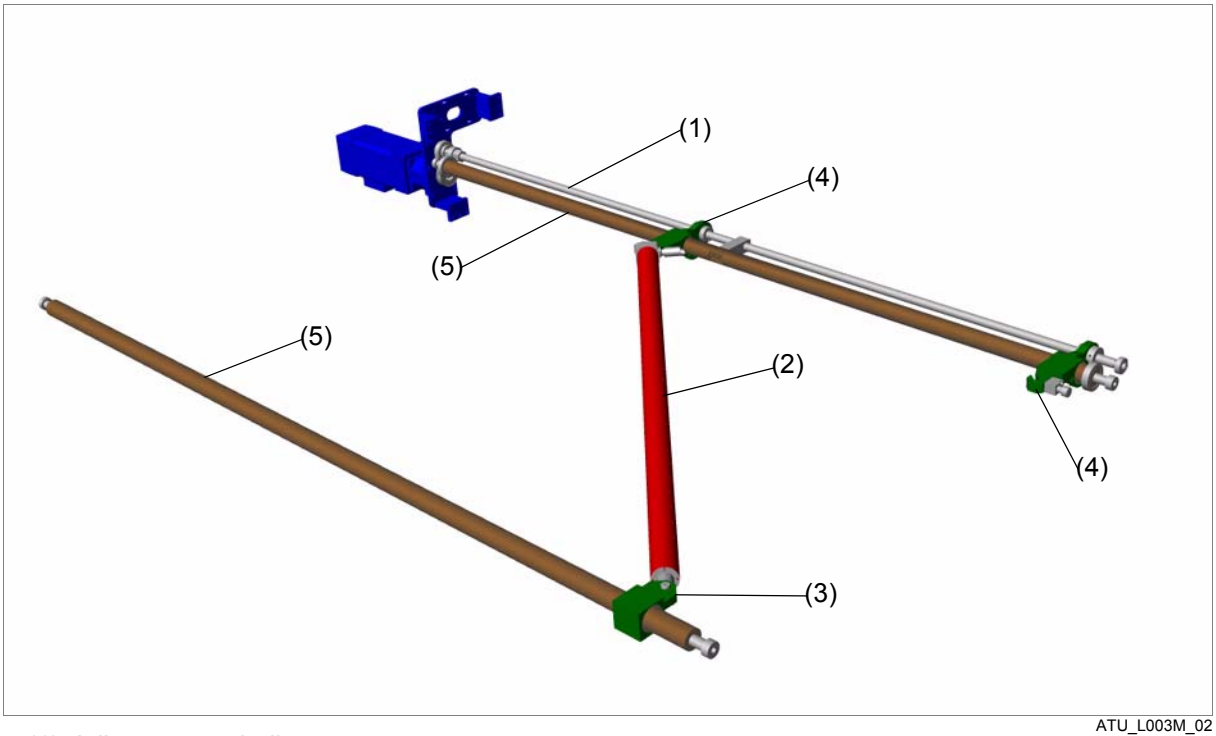

ATU_L003M_02

(1) Adjustment spindle
(2) Trailing angle bar
(3) Holder, undriven
(4) Holder, driven
(5) Cross-member guides

One side the angle bar (2) is screwed onto the undriven holder (3). The holder can be freely moved laterally on a guide crossbeam (1) (Fig. 4).

Fig. 4 Holder with fitting

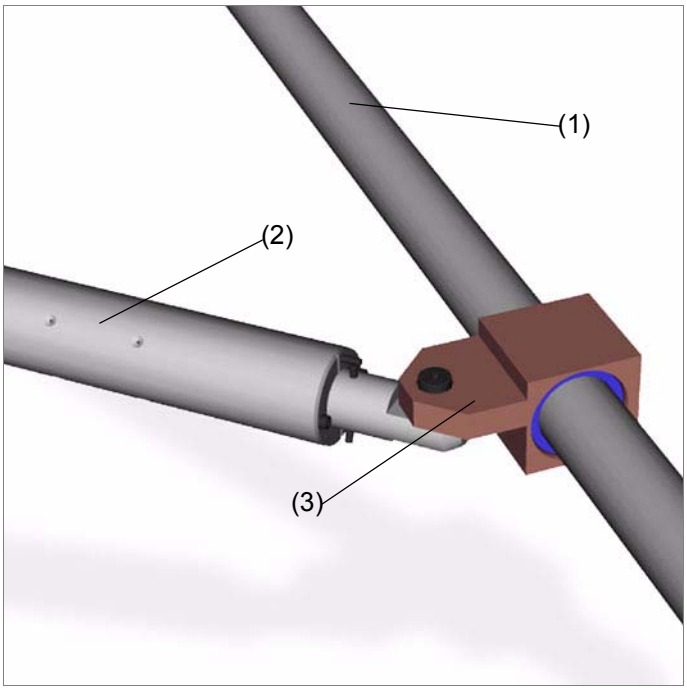

ATU_L006M

(1) Crossbeam guide
(2) Angle bar
(3) Holder, undriven

The end of the angle bar (8) has a blast air connection (8) and is fitted with a stop bolt (6) (Fig. 5), (Fig. 6). To hold the angle bar, holders (2) are mounted on the cross-beam guides (4) with quick-action connectors (5). This permits the angle bar to be easily moved from one position to the other. The lateral movement of the angle bar is done with an adjustment spindle (1) and a permanently fixed adjustment nut (3) in the holder.

Fig. 5 Holder with quick-action connector, leading angle bar

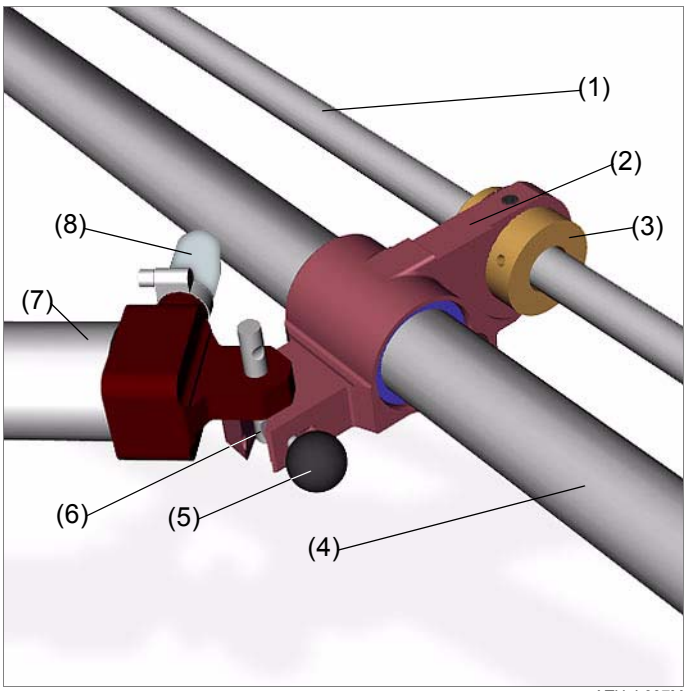

ATU_L007M

(1) Adjustment spindle
(2) Holder, driven
(3) Adjustment nut
(4) Crossbeam guide
(5) Quick-action connector
(6) Stop bolt
(7) Angle bar
(8) Blast air hose

Fig. 6 Holder with quick-action connector, trailing angle bar

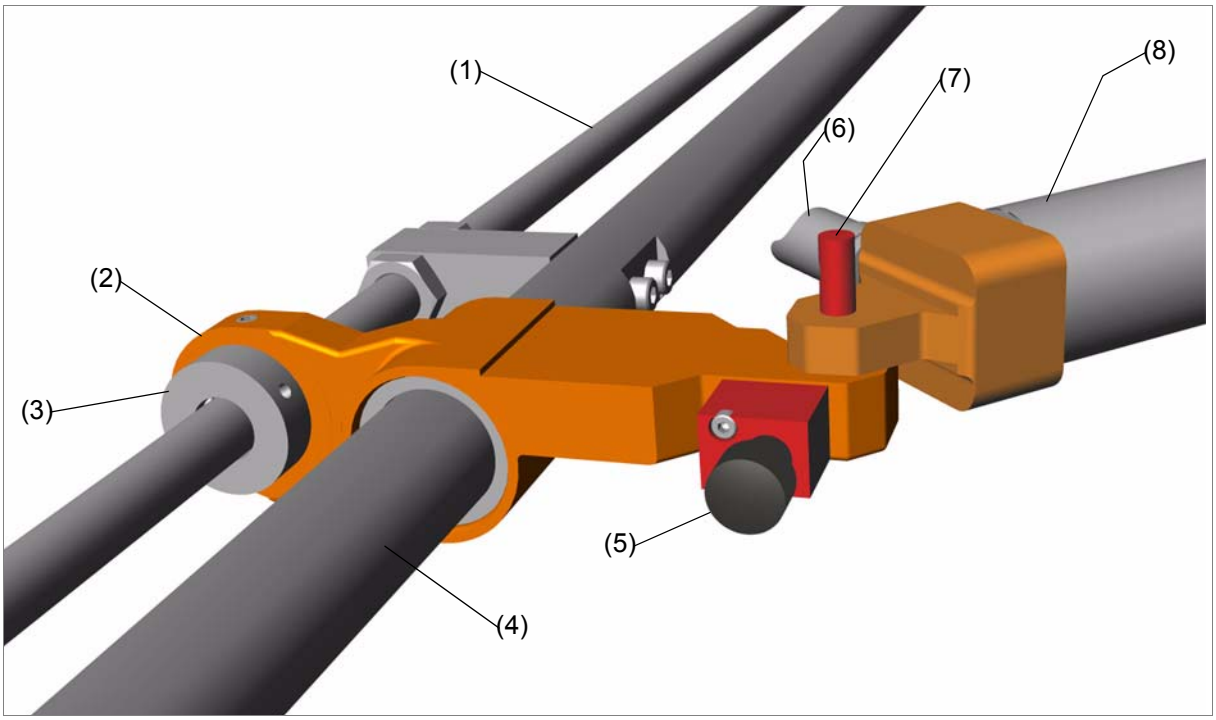

ATU_L008M_02

(1) Adjustment spindle
(2) Holder, driven
(3) Adjustment nut
(4) Crossbeam guide
(5) Quick-action connector
(6) Blast air hose
(7) Stop bolt
(8) Angle bar

2.2 Angle-bar drive

Responsible for laterally displacing the angle bars is a drive (1) that works via a timing belt (2) on the adjustment spindle (3) (Fig. 7).
The drives are mounted on side II.
Positioning of the angle bars is done remotely from the control console, whereby the current position is fed back automatically.
Positioning during standstill can be performed only by pressing the *REFERENCE* push-button according to Chapt. 4.2 Referencing.
In an emergency the angle bar can be manually adjusted with an adjusting screw on the adjustment spindle (3) on side I (Chapt. 7.3 Emergency adjustment of the angle bars in Reg. 4 Operation).

Fig. 7 Angle-bar drive

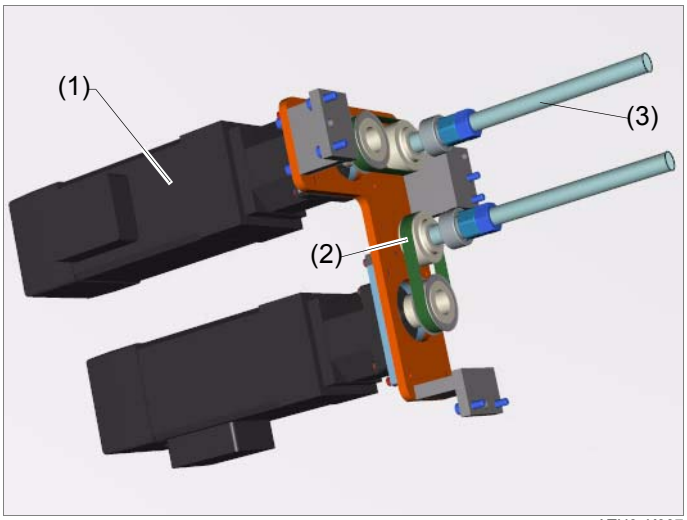

(1) drive
(2) Timing belt
(3) Adjustment spindle

2.3 Blast air

Blast air is supplied to each angle bar (1). The angle bar has blast air holes (2) in the longitudinal axis (Fig. 8). The air issuing from the holes forms an air cushion between angle bar and ribbon. This reduces friction and the ink set-off of the web on the angle bar.
The blast air is generated by a duct compressor (6) installed on side I and is supplied to each angle bar via a pipeline system (5). Operation is automatic in production.

Fig. 8 Air blast on angle bar

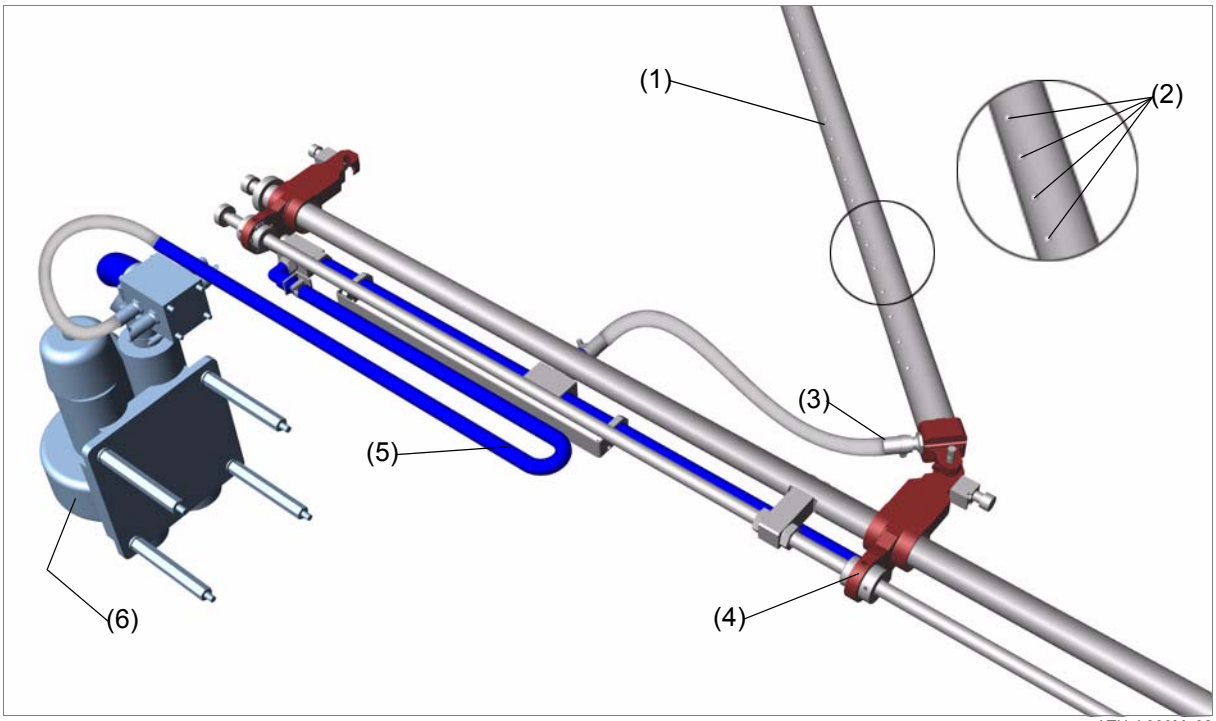

(1) Angle bar
(2) Blast air holes
(3) Flexible air line with quick-release coupling
(4) Holder
(5) Pipeline
(6) duct fan compressor

Note

Full information about maintenance activities on the duct compressor are described by the manufacturer and can be found in the *Suppliers' documentation* file.

2.4 Right-angle web lead rollers (optional)

A right angle web lead roller is arranged on each angle-bar assembly on side 1 and side 2. With this configuration, it is possible to reverse a web on the same angle-bar assembly or to guide it directly to another angle-bar assembly (Fig. 10) and (Fig. 11).

Fig. 9 Right-angle web lead rollers

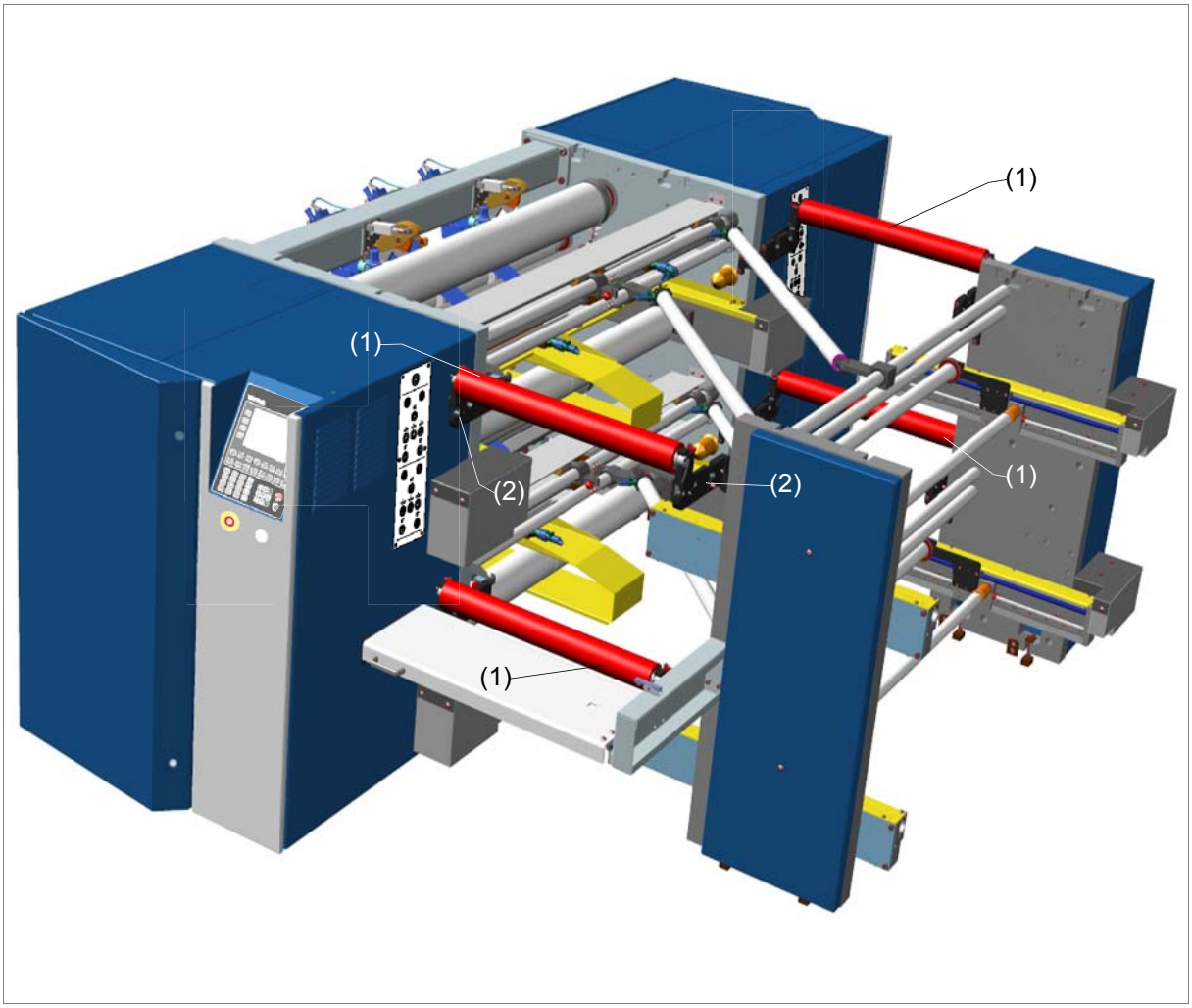

ATU_L001M_01

(1) Right angle web lead rollers
(2) Holder for right-angle web lead roller

Fig. 10 Turning position

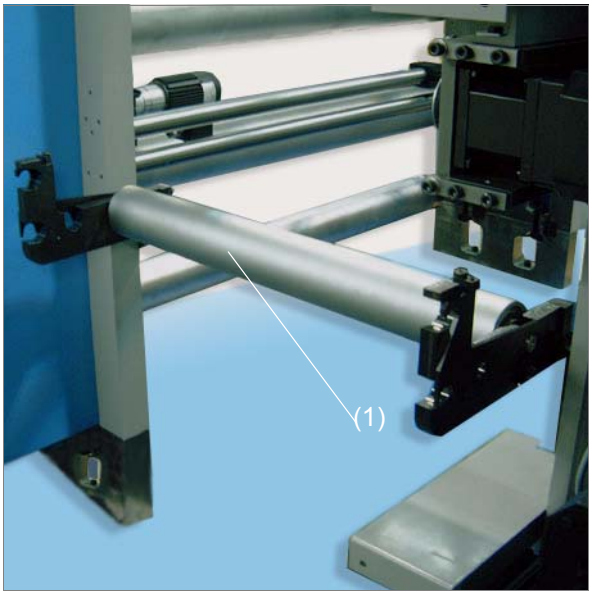

ATU_147_004_01

(1) Right-angle web lead roller in position: Reverse web on same assembly

Fig. 11 Position (turning to next assembly)

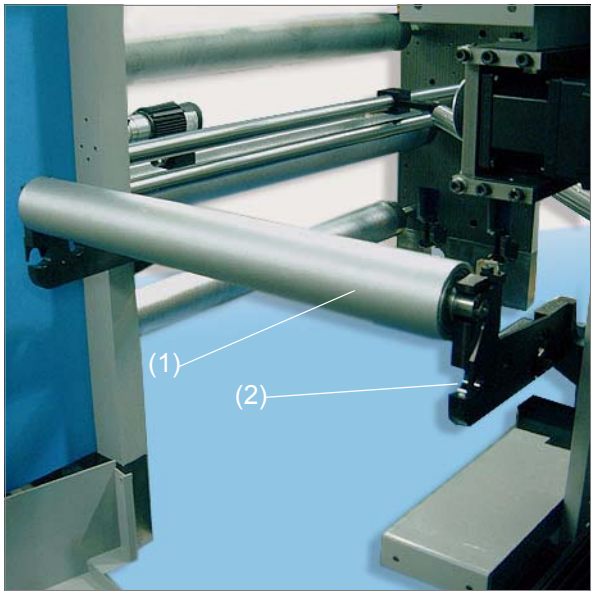

ATU_147_005_01

(1) Right-angle web lead roller in position: Web to next assembly above

(2) Right-angle web lead roller in position: Web to next assembly below

Note

Changing over the right-angle web lead rollers is described in Chapt. 8 Right-angle web lead roller (optional) in Reg. 4 Operation.

3 Replace components

Contents

This chapter contains the following information:

- Chapt. 3.1 WIFAG article numbers
- Chapt. 3.2 Replace angle bar drive timing belt
- Chapt. 3.3 Replace angle bar drive
- Chapt. 3.4 Replace duct fan

Specification

For safety reasons only the replacement work described in these operating instructions may be performed! All replacement work not described herein must be performed by qualified WIFAG personnel.

3.1 WIFAG article numbers

Tab. 1 Overview of components and accessories

Article	Obtainable only from WIFAG	Can be ordered from WIFAG
Angle bar drive	1272667	----------
Timing belt HDT 325-5M-15	A68562	----------
duct fan compressor	1279571	----------
Grip-ring set DKWN 15-28	1268735	----------
Quick-action connector 6350 3/4" Nito	A57856	----------
Quick-action connector nipple 6360C 16 mm Nito	107486	----------

3.2 Replace angle bar drive timing belt

Requirements

- Production group at standstill

Materials needed

- Warning sign *Work is in progress!*
- Allen key set
- Cabinet key
- Rope

⚠ WARNING	**Risk of injury!** **Risk of being trapped and crushed** by rotating timing belt pulleys and timing belt! => De-allocate function group from the production group at the control panel and electrically disable (push the *SAFE-STOP* pushbutton). => Place *Work in progress!* warning signs on the corresponding terminals and control panels.

Removing timing belt

1. Switch off the power supply to the angle-bar module at the associated safety switch and secure against being switched back on (Chapt. 5.1 Switch current supply on and off in Reg. 2 Important for your safety).
2. Open the door (1) side II with the cabinet key (Fig. 12).
3. Electrically disconnect the drives (13) (14) where required (Chapt. 2.2 Replacing drives in Reg. 11 Electrical setting and commissioning instructions in the System file).
4. Loosen the retaining screws (2) and remove cover (3).
5. Loosen the retaining screws (6) on the adapter plate (7) and slightly tighten.
6. Loosen the locknuts (5).
7. Screw out the adjusting screw (4) until the timing belt (11) is relaxed.

If the timing belt on the drive (13) cannot be replaced through the window:

=> Loosen all retaining screws (10) and remove upper enclosure (8).

8. Lift timing belt (11) off timing belt pulleys (12).

> The timing belt is removed.

Install timing belt

9. Place new timing belt (11) onto timing belt pulleys (12) (Fig. 12).
10. Screw in the adjusting screw (4) until the timing belt (11) is tensioned (523 - 529 Hz) according to Chapt. 4.12 Measuring and setting timing belt tensions in Reg. 6 Maintenance.
11. Tighten the retaining screws (6) on the adapter plate (7).
12. Tighten the locknuts (5).

If the enclosure has been removed:

=> Mount enclosure (8) and tighten all retaining screws (10).

13. Electrically connect the drives (13) (14). (Chapt. 2.2 Replacing drives in Reg. 11 Electrical setting and commissioning instructions in the System file)
14. Mount the cover (3) and tighten the retaining screws (2).
15. Close the door (1) side II with the cabinet key.
16. Set filter-regulator-lubricator unit to 6.5 bar (Chapt. 4.1.3 Setting the filter-regulator-lubricator unit in Reg. 8 Pneumatic system in the System file).
17. Switch on the angle-bar module at the associated safety switch (Chapt. 5.1 Switch current supply on and off in Reg. 2 Important for your safety).
18. Use the SAFE-STOP pushbutton to electrically enable; remove the Work is in progress! warning notice.

> The timing belt is now replaced.

Fig. 12 Procedure for replacing timing belt

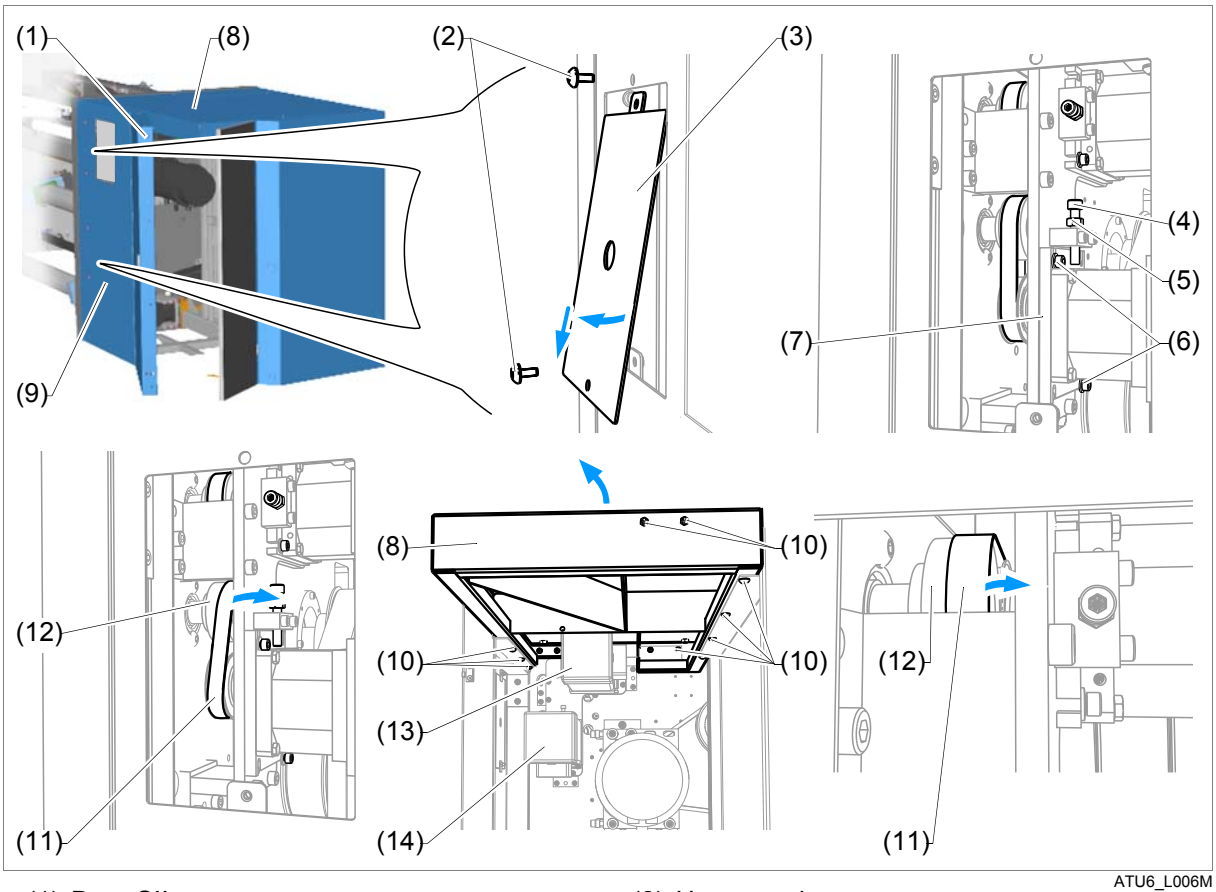

ATU6_L006M

(1) Door SII
(2) Retaining screw
(3) Cover
(4) Adjusting screw
(5) Locknut
(6) Adapter plate retaining screw
(7) Adapter plate
(8) Upper enclosure
(9) Enclosure side
(10) Retaining screws
(11) Timing belt
(12) Timing belt pulley
(13) Drive for leading angle bar
(14) Drive for trailing angle bar

3.3 Replace angle bar drive

Requirements

- Production group at standstill

Materials needed

- WIFAG electrical circuit diagram *angle-bar module*
- Warning sign Work is in progress!
- Multimeter
- Allen key set
- Supplied measuring device
- Torque wrench
- Rope
- Protective rubber gloves
- Soft cloth
- Cleaning agent
- Oil No. 2

⚠ WARNING	**Risk of injury!** **Risk of being trapped and crushed** by rotating timing belt pulleys and timing belt! => De-allocate function group from the production group at the control panel and electrically disable (push the *SAFE-STOP* pushbutton). => Place *Work in progress!* warning signs on the corresponding terminals and control panels.

Drive removal

1. Switch off the power supply to the angle-bar module at the associated safety switch and secure against being switched back on (Chapt. 5.1 Switch current supply on and off in Reg. 2 Important for your safety).
2. Open the door (1) side II with the cabinet key (Fig. 13).
3. Electrically disconnect the drives (13) (14) where required (Chapt. 2.2 Replacing drives in Reg. 11 Electrical setting and commissioning instructions in the System file).
4. Loosen the retaining screws (2) and remove cover (3).
5. Loosen the retaining screws (6) on the adapter plate (7) one revolution.
6. Loosen the locknuts (5).
7. Screw out the adjusting screw (4) until the timing belt (11) is relaxed.

If the timing belt on the drive (13) cannot be removed through the window:

=> Loosen all retaining screws (10) and remove upper enclosure (8).

8. Lift timing belt (11) off timing belt pulleys (12) (18).
9. Secure the drive (13) (14) with a rope on a crane or chain hoist.

⚠ WARNING	**Risk of injury!** **Danger of crushing** if drive falls down. Weight is 14 kg! => Take precautions that the drive(s) does not fall when being replaced.

10. Loosen the retaining screws (6) on the adapter plate (7) and remove the drive (13) (14).
11. Loosen the four retaining screws (15) and remove the arrester plate (7).
12. Loosen the tightening screws (21) on the grip-ring set (20) one after the other in several steps.
13. Separate the grip-ring set (20) if necessary using the jacking screws.
14. Pull off the timing belt pulley (18) and the grip-ring set (20) from the drive shaft (19).
15. Dismantle the grip-ring set (20).
16. Clean the grip-ring set, timing belt pulley and drive shaft; degrease and rub dry with a soft cloth.

> This completes drive removal.

Install drive

17. Mount the new drive (13) (14) in the arrester plate (7) (Fig. 13).
18. Tighten the retaining screws (15).
19. Lightly oil the grip-ring set (20) with oil No. 2.
20. Push the timing belt pulley (18) with the grip-ring set (20) onto the drive shaft (19) of the new drive and set the reference dimension (16) to 11 mm.
21. Tighten the tightening screws (21) on the grip-ring set (20) one after the other and in several steps until all tightening screws (21) reach the full tightening torque of 2.1 Nm.
22. Secure the drive (13) (14) with a rope on a crane or chain hoist.

⚠ WARNING	**Risk of injury!** **Danger of crushing** if drive falls down. Weight is 14 kg! => Take precautions that the drive(s) does not fall when being replaced.

23. Insert the drive (13) (14) and slightly tighten the retaining screws (6).
24. Align the timing belt (11) over the timing belt pulleys (12) (18).
25. Screw in the adjusting screw (4) until the timing belt (11) is tensioned (523 - 529 Hz) according to Chapt. 4.12 Measuring and setting timing belt tensions in Reg. 6 Maintenance.
26. Tighten the retaining screws (6).
27. Tighten the locknuts (5).
28. Remove the rope or chain hoist from the drive (13) (14).
29. Electrically connect the drive (13) (14). (Chapt. 2.2 Replacing drives in Reg. 11 Electrical setting and commissioning instructions in the *System* file)

If the enclosure has been removed:

=> Mount enclosure (8) and tighten all retaining screws (10).

30. Mount the cover (3) and tighten the retaining screws (2).
31. Close the door (1) side II with the cabinet key.
32. Switch on the angle-bar module at the associated safety switch (Chapt. 5.1 Switch current supply on and off in Reg. 2 Important for your safety).
33. Use the *SAFE-STOP* pushbutton to electrically enable; remove the *Work is in progress!* warning notice.

> This completes drive replacement.

Fig. 13 Procedure for replacing drive

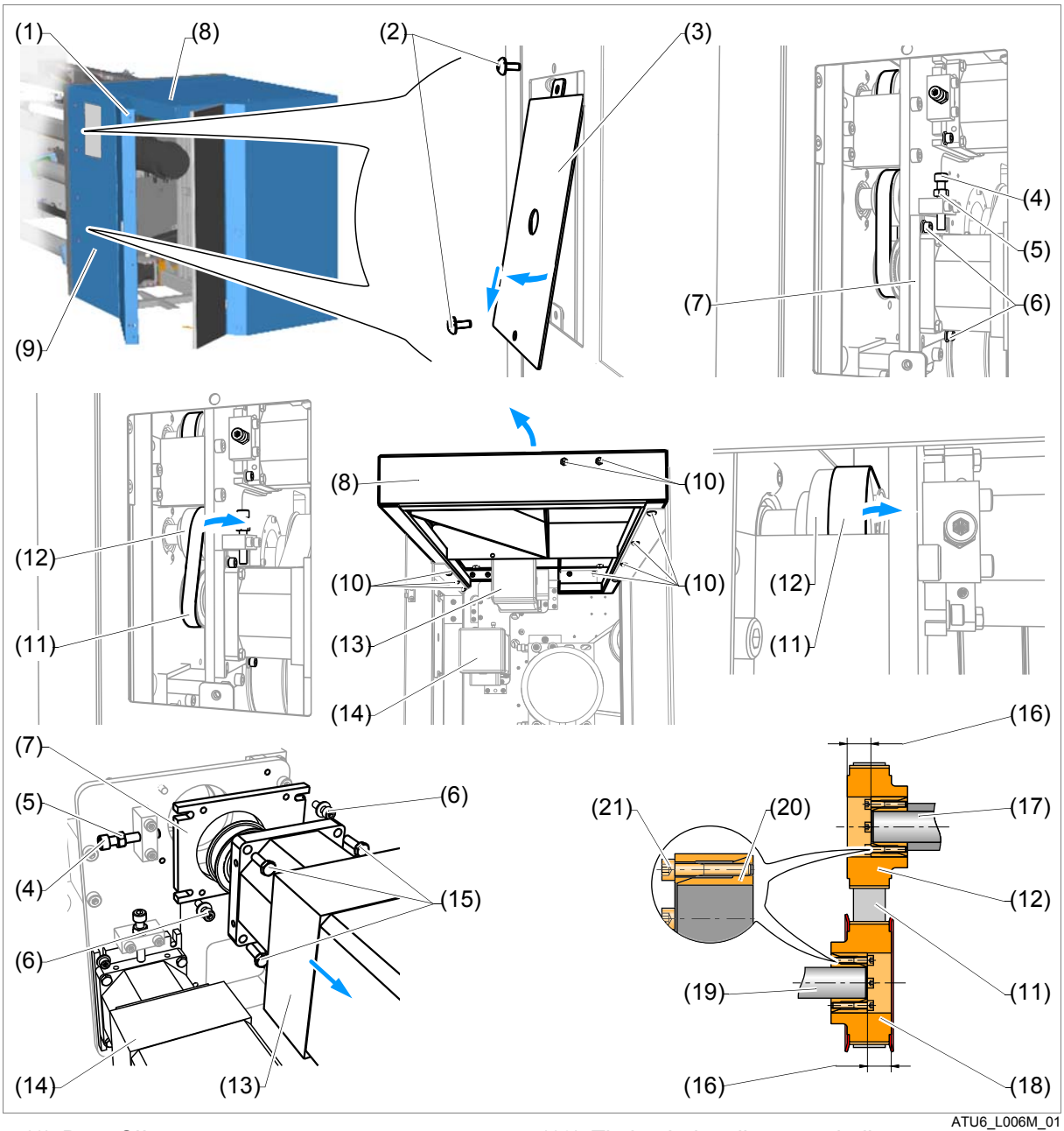

ATU6_L006M_01

(1) Door SII
(2) Retaining screw
(3) Cover
(4) Adjusting screw
(5) Locknut
(6) Adapter plate retaining screw
(7) Adapter plate
(8) Upper enclosure
(9) Enclosure side
(10) Retaining screws
(11) Timing belt
(12) Timing belt pulley on spindle
(13) Drive for leading angle bar
(14) Drive for trailing angle bar
(15) Drive retaining screw
(16) Reference dimension = **11 mm**
(17) Spindle
(18) Timing belt pulley on drive shaft
(19) Drive shaft
(20) Grip-ring set
(21) Tensioning screw

3.4 Replace duct fan

Requirements

- Production group at standstill

Materials needed

- Warning sign *Work is in progress!*
- Cabinet key
- Fork wrench size 17
- For wrench size 24
- Screwdriver No. 2
- Rope

Remove duct fan

1. Electrically disable function group at the nearest control panel with pushbutton *SAFE-STOP*.
2. Place *Work in progress!* warning signs on the corresponding terminals and control panels.
3. Switch off the power supply to the angle-bar module at the associated safety switch and secure against being switched back on (Chapt. 5.1 Switch current supply on and off in Reg. 2 Important for your safety).
4. Open door side I with cabinet key.
5. Electrically disconnect duct compressor (3) (Chapt. 2.2 Replacing drives in Reg. 11 Electrical setting and commissioning instructions in the *System* file) (Fig. 14).
6. Loosen hose clip (6) on blow air hose (7) and pull off blow air hose from duct compressor (3).
7. Secure duct fan (3) to crane or block and tackle.

⚠ WARNING	**Risk of injury!** **Danger of crushing** if duct fan falls down. Weight is 23 kg! => Ensure that the duct fan does not fall when being replaced.

8. Loosen retaining screws (5) and remove with duct compressor (3).

> Duct fan is removed.

Fig. 14 Duct compressor side I

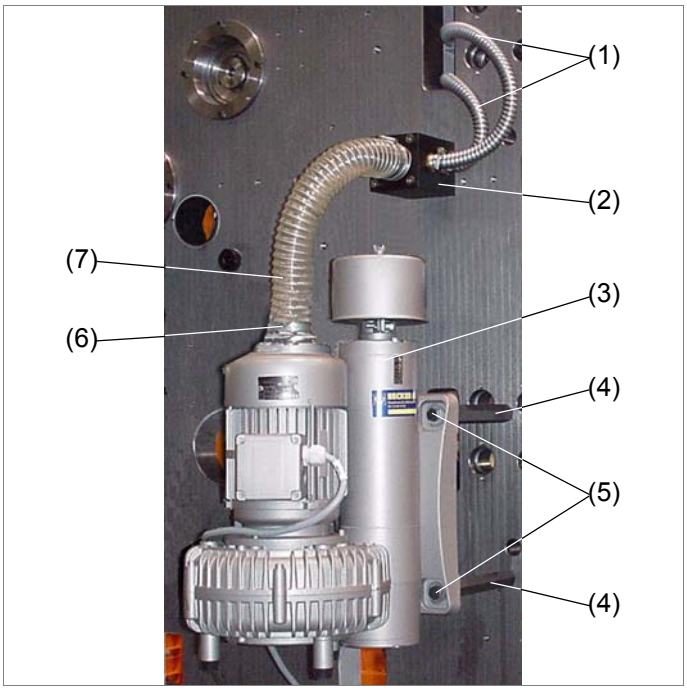

ATU_129_024_02

(1) Blow air hose to angle bars
(2) Distribution list
(3) duct fan compressor
(4) Stud
(5) Retaining screws
(6) Hose clip
(7) Blow air hose to distributor

Install duct fan

9. Position new duct compressor (3) on stud(s) (4) (Fig. 14).
10. Screw in and tighten retaining screws (5).
11. Detach duct fan (3) from crane or block and tackle.
12. Mount blow air hose (7) with hose clip (6) on duct compressor (3).
13. Electrically connect the duct compressor (3). (Chapt. 2.2 Replacing drives in Reg. 11 Electrical setting and commissioning instructions in the *System* file)
14. Close doors side I.
15. Switch on angle-bar module at the associated safety switch (Chapt. 5.1 Switch current supply on and off in Reg. 2 Important for your safety).
16. Use the *SAFE-STOP* pushbutton to electrically enable; remove the *Work is in progress!* warning notice.

> Duct fan is replaced.

4 Basic settings

Contents

This chapter contains the following information:

- Chapt. 4.1 Setting
- Chapt. 4.2 Referencing
- Chapt. 4.3 Testing

Specification

For safety reasons only the adjustment work described in these operating instructions may be performed! All adjustment work not described herein must be performed by qualified WIFAG personnel.

4.1 Setting

4.1.1 Set timing belt tension

Note

Further information about setting timing belt tension is in Chapt. 4.12 Measuring and setting timing belt tensions in Reg. 6 Maintenance.

4.2 Referencing

Note

Reference angle bars according to Chapt. 7.4 Referencing / positioning in Reg. 4 Operation!

4.3 Testing

Note

No tests are necessary on this sub-function group.

12 Secondary register (optional)

1 Overview **12.3**

2 Construction and function **12.4**
2.1 Linear guides for secondary register roller **12.4**
2.2 Secondary register roller drive **12.5**

3 Replace components **12.6**
3.1 WIFAG article numbers **12.6**
3.2 Replace the secondary register roller drive timing belt **12.7**
3.3 Replace drive for secondary register roller **12.9**

4 Basic settings **12.13**
4.1 Setting **12.13**
4.1.1 Set timing belt tension 12.13
4.2 Referencing **12.13**
4.3 Testing **12.13**

1 Overview

For each angle-bar module a maximum of two secondary registers (Fig. 1) can be installed.
The web is compensated for the correct cutoff length in the folder with the secondary register. The range of adjustment is the full circumference of an impression cylinder.
The secondary register roller is mounted in a holder on both sides that is screwed to a dolly. The dolly is fastened to a linear guide (2) and is moved by a drive (1) on side II via a ball screw.
The adjustment of the secondary register roller is made remotely from the central control console.

Fig. 1 Overview of the secondary register

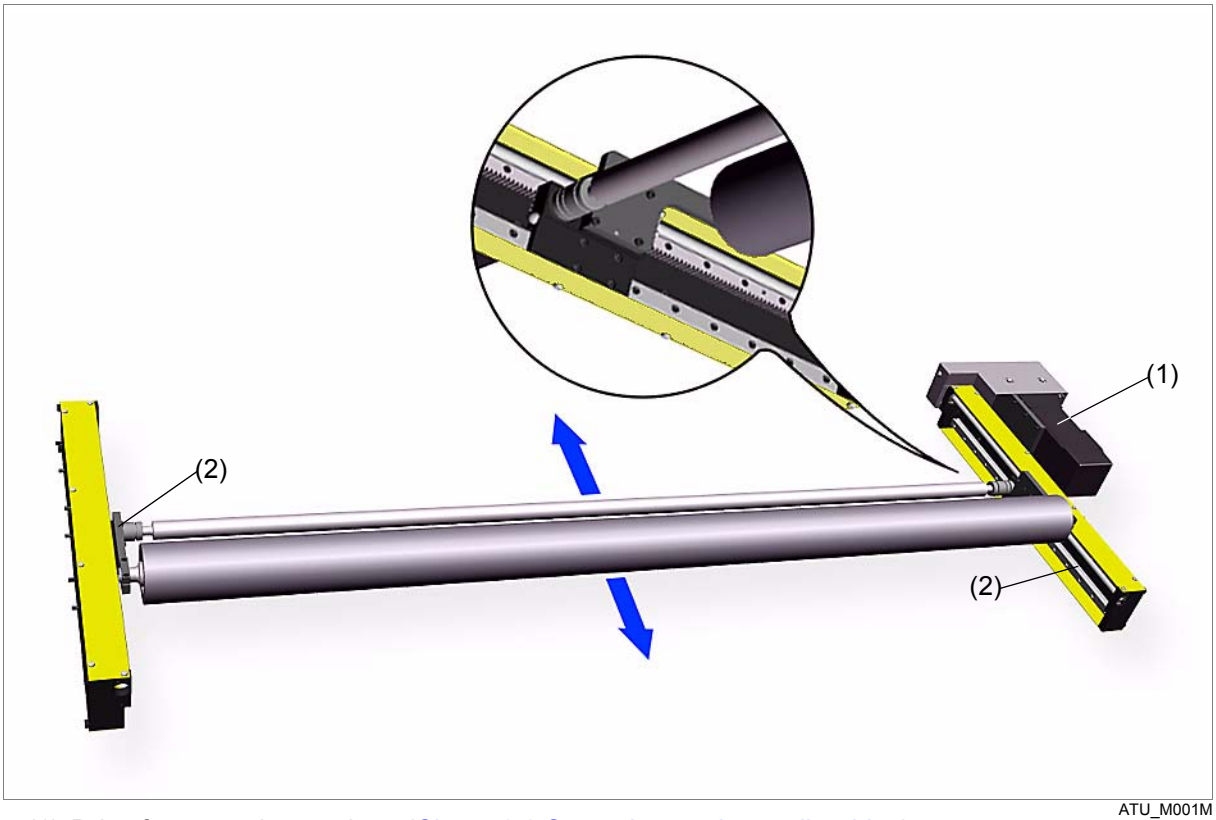

ATU_M001M

(1) Drive for secondary register (Chapt. 2.2 Secondary register roller drive)
(2) Linear guides for secondary register roller (Chapt. 2.1 Linear guides for secondary register roller)

2 Construction and function

Contents

This chapter contains the following information:

- Chapt. 2.1 Linear guides for secondary register roller
- Chapt. 2.2 Secondary register roller drive

2.1 Linear guides for secondary register roller

The linear guides on the inner side of the walls side I and II serve the horizontal adjustment precision of the secondary register roller (Fig. 2).
On the moveable part of the linear guide (6) a dolly (7) is fastened. Screwed onto the dolly is a holder (2) that holds the axel of the secondary register roller.
On both sides of the compensation shaft there are gearwheels connected by a clutch (1). The meshed gearwheels are mounted on side I and II in spur racks (4) and ensure that the two dollies (7) move exactly parallel to each other.

Fig. 2 Linear guide

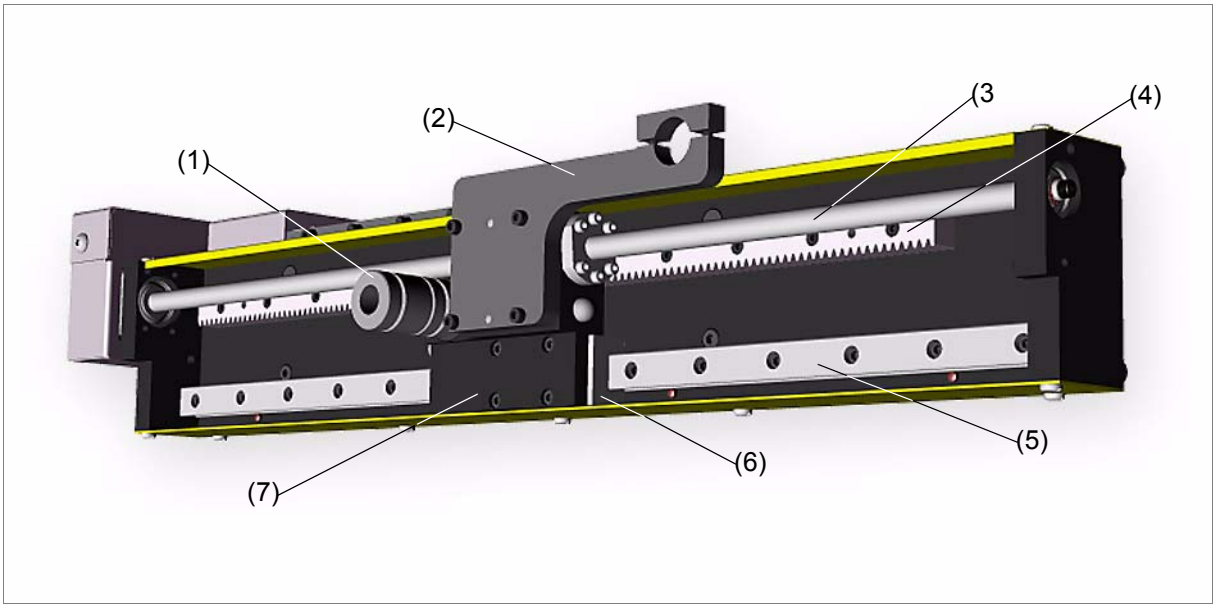

ATU_M002M

(1) coupling
(2) Holder
(3) Ballscrew spindle
(4) Spur rack
(5) Linear guide, fixed part
(6) Linear guide, moveable part
(7) Dolly

2.2 Secondary register roller drive

The horizontal movement of the secondary register roller (3) is the responsibility of a ball screw (4) (5) (Fig. 3). The drive (11) is integrated on side II. The spindle of the ball screw (4) is driven via a timing belt (9). The rotary motion of the spindle (4) drives the permanently mounted nut (5) in the dolly (6) and thereby displaces the secondary register roller mounted in the dolly.
The positioning of the secondary register roller is done remotely from the central control console.
In an emergency the secondary register roller can be manually adjusted with an adjusting screw on the ball screw spindle (4) (Chapt. 9.1 Emergency adjustment of the secondary register roller in Reg. 4 Operation).

Fig. 3 Secondary register roller drive

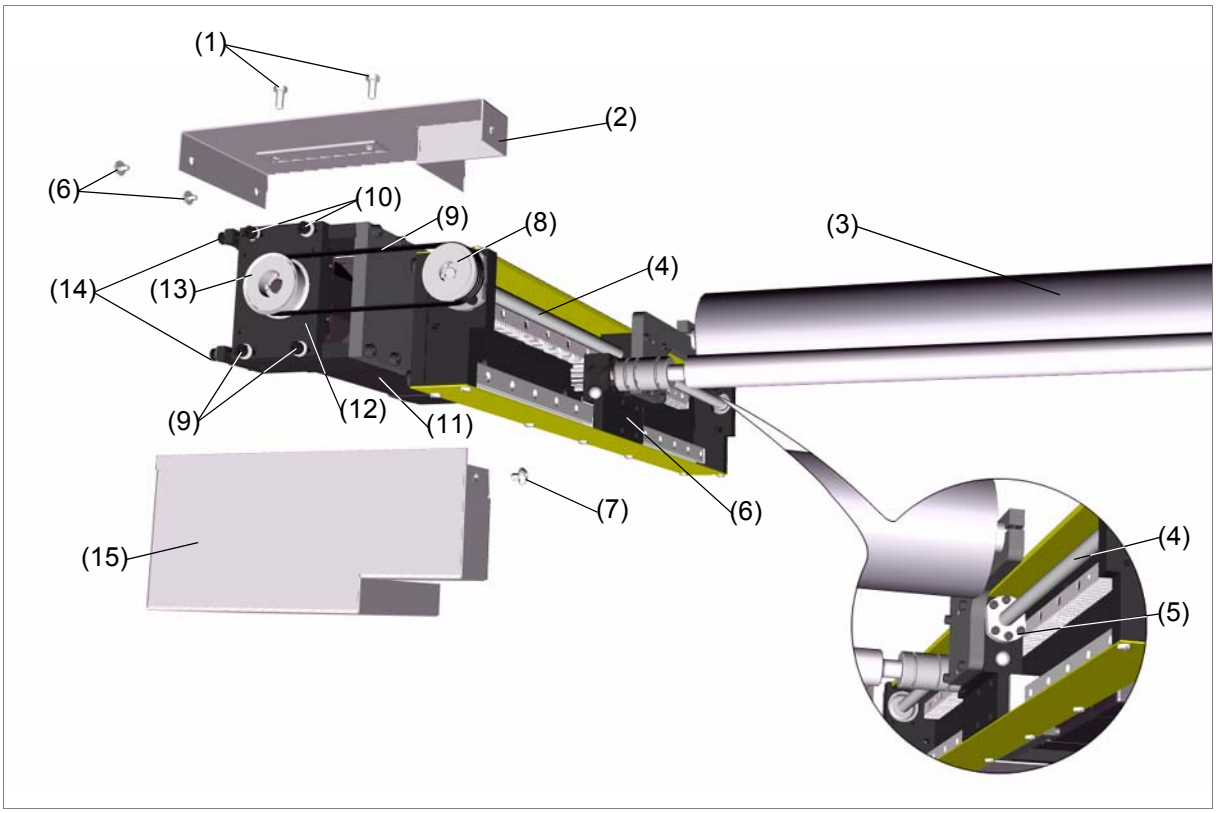

ATU_M003M

(1) Retaining screw for upper cover
(2) Upper cover
(3) Secondary register roller
(4) Ballscrew spindle
(5) Nut
(6) Dolly
(7) Retaining screw for lower cover
(8) Belt pulley on ball screw spindle
(9) Timing belt
(10) Retaining screws for drive plate
(11) drive
(12) Drive plate
(13) Belt pulley on drive
(14) Retaining screws
(15) Lower cover

3 Replace components

Contents

This chapter contains the following information:

- Chapt. 3.1 WIFAG article numbers
- Chapt. 3.2 Replace the secondary register roller drive timing belt
- Chapt. 3.3 Replace drive for secondary register roller

Specification

For safety reasons only the replacement work described in these operating instructions may be performed! All replacement work not described herein must be performed by qualified WIFAG personnel.

3.1 WIFAG article numbers

Tab. 1 Overview of components and accessories

Article	Obtainable only from WIFAG	Can be ordered from WIFAG
Secondary register roller drive	1272667	----------
Timing belt HDT 580-5M-15	1278129 (A60721)	----------
Grip-ring set DKWN 15-28	1268735-	----------

3.2 Replace the secondary register roller drive timing belt

Requirements

- Production group at standstill

Materials needed

- Warning sign *Work is in progress!*
- Allen key set
- Open-ended spanner size 10
- Supplied measuring device

⚠ WARNING	**Risk of injury!** **Risk of being trapped and crushed** by rotating timing belt pulleys and timing belt! => De-allocate function group from the production group at the control panel and electrically disable (push the *SAFE-STOP* pushbutton). => Place *Work in progress!* warning signs on the corresponding terminals and control panels.

Removing timing belt

1. Switch off the power supply to the angle-bar module at the associated safety switch and secure against being switched back on (Chapt. 5.1 Switch current supply on and off in Reg. 2 Important for your safety).
2. Loosen retaining screws (2) and remove the lower cover (1) (Fig. 4).
3. Unscrew the retaining screws (3) and remove the upper cover (4).
4. Slacken the motor plate retaining screws (7) and screw out one revolution.
5. Loosen the tightening screws (8) until the timing belt (12) is relaxed.
6. Remove the timing belt (12).

> The timing belt is removed.

Install timing belt

7. Place the new timing belt (12) onto timing belt pulleys (11) (13).
8. Tighten the tightening screws (8) until the timing belt (12) is relaxed to 192 - 198 Hz as described in Chapt. 4.12 Measuring and setting timing belt tensions in Reg. 6 Maintenance.
9. Tighten the retaining screws (7).
10. Mount the upper cover (4) and tighten the retaining screws (3).
11. Mount the lower cover (1) and tighten the retaining screws (2).
12. Switch on the angle-bar module at the associated safety switch (Chapt. 5.1 Switch current supply on and off in Reg. 2 Important for your safety).
13. Electrically enable the function group with the *SAFE-STOP* pushbutton.
14. Reference the secondary register (Chapt. 4.2 Referencing)
15. Remove the *Work is in progress!* warning signs.

> The timing belt is now replaced.

Fig. 4 Procedure for replacing timing belt

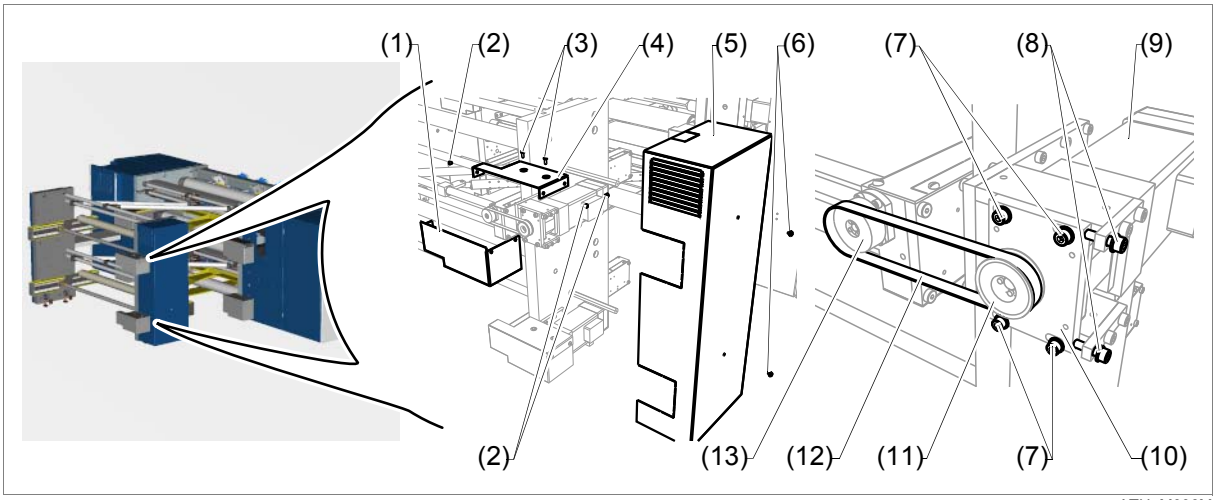

(1) Lower cover
(2) Retaining screws for lower cover
(3) Retaining screws for upper cover
(4) Upper cover
(5) Cover plate
(6) Retaining screws for cover plate
(7) Retaining screws for motor plate
(8) Retaining screws
(9) drive
(10) Motor plate
(11) Timing belt pulley for drive
(12) Timing belt
(13) Positioning unit timing belt pulley

3.3 Replace drive for secondary register roller

Requirements

- Production group at standstill

Materials needed

- *WIFAG electrical diagrams W*
- Warning sign *Work is in progress!*
- Multimeter
- Allen key set
- Supplied measuring device
- Torque wrench
- Rope
- Protective rubber gloves
- Soft cloth
- Cleaning agent
- Oil No. 2

⚠ WARNING	**Risk of injury!** **Risk of being trapped and crushed** by rotating timing belt pulleys and timing belt! => De-allocate function group from the production group at the control panel and electrically disable (push the *SAFE-STOP* pushbutton). => Place *Work in progress!* warning signs on the corresponding terminals and control panels.
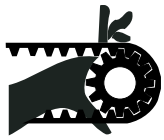	

Drive removal

1. Switch off the power supply to the angle-bar module at the associated safety switch and secure against being switched back on (Chapt. 5.1 Switch current supply on and off in Reg. 2 Important for your safety).
2. Electrically disconnect the drive (9) inside the cabinet (Chapt. 2.2 Replacing drives in Reg. 11 Electrical setting and commissioning instructions in the *System* file).

3. Loosen the retaining screws (6) and remove the cover plate (5) (Fig. 5).
4. Loosen the retaining screws (2) and remove the lower cover (1).
5. Unscrew the retaining screws (3) and remove the upper cover (4).
6. Slacken the motor plate retaining screws (7) and screw out one revolution.
7. Loosen and remove the retaining screws (8).
8. Remove the timing belt (12).
9. Loosen the tightening screws (16) on the **grip-ring set** (14) one after the other in **several** steps.
10. Separate the grip-ring set (14) if necessary using the jacking screws.
11. Pull off the timing belt pulley (11) and grip-ring set (14) from the drive shaft (17).
12. Dismantle the grip-ring set (14).
13. Clean the grip-ring set (14), timing belt pulley (11) and drive shaft (17); degrease and rub dry with a soft cloth.
14. Loosen the retaining screws (7) only until the drive (9) can be angled.
15. Loosen and remove the retaining screws (15) on the difficult to access side.
16. Secure the drive (9) with a rope against falling.

⚠ **WARNING**	**Risk of injury!** **Danger of crushing** if drive falls down. Weight is 14 kg! => Take precautions that the drive(s) does not fall when being replaced.

17. Loosen and remove the other retaining screws (15).
18. Remove the drive (9).

> This completes drive removal.

Fig. 5 Procedure for replacing drive

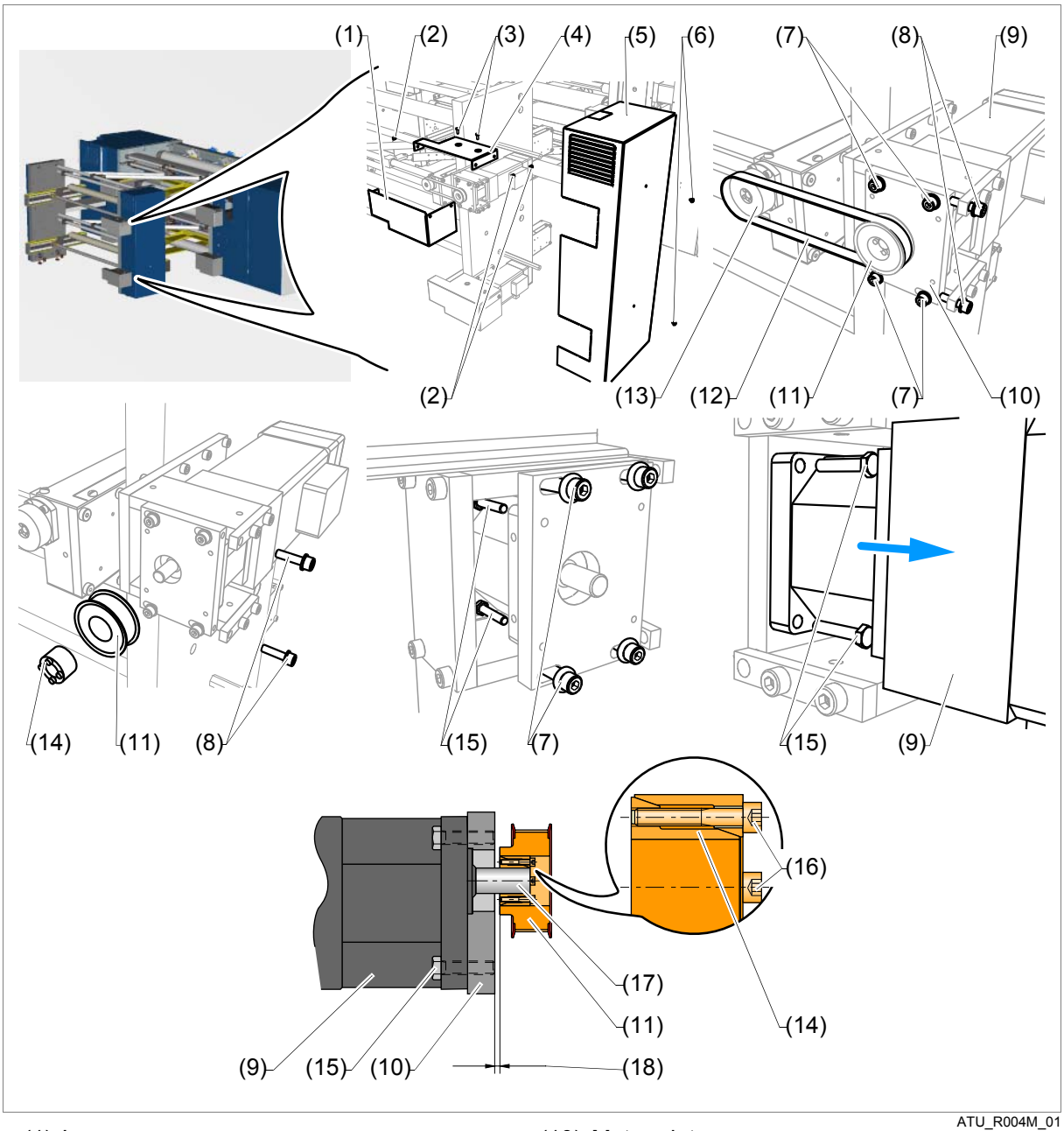

(1) Lower cover
(2) Retaining screws for lower cover
(3) Retaining screws for upper cover
(4) Upper cover
(5) Cover plate
(6) Retaining screws for cover plate
(7) Retaining screws for motor plate
(8) Retaining screws
(9) drive
(10) Motor plate
(11) Timing belt pulley for drive
(12) Timing belt
(13) Positioning unit timing belt pulley
(14) Grip-ring set
(15) Retaining screw for drive
(16) Tensioning screw
(17) Drive shaft
(18) Reference dimension = **2 mm**

Install drive

WARNING	**Risk of injury!** **Danger of crushing** if drive falls down. Weight is 14 kg! => Take precautions that the drive(s) does not fall when being replaced.

19. Mount the new drive (9) in the motor plate (10), screw in retaining screws (15) and tighten (Fig. 5).
20. Lightly tighten the retaining screws (7).
21. Lightly oil the grip-ring set (14) with oil No. 2.
22. Push the timing belt pulley (11) with the grip-ring set (14) onto the drive shaft (17) of the new drive and set the reference dimension (18) to 2 mm.
23. Tighten the tightening screws (16) on the **grip-ring set** (14) one after the other and in **several** steps until all tightening screws (16) reach the full tightening torque of 2.1 Nm.
24. Place the timing belt (12) onto the timing belt pulleys (11) (13) and align.
25. Turn the tightening screws (8) into the motor plate (10).
26. Tighten the tightening screws (10) until the timing belt (12) is relaxed to 192 - 198 Hz as described in Chapt. 4.12 Measuring and setting timing belt tensions in Reg. 6 Maintenance.
27. Tighten the retaining screws (7).
28. Electrically connect drive (9) (Chapt. 2.2 Replacing drives in Reg. 11 Electrical setting and commissioning instructions in the *System* file).
29. Mount the upper cover (4) and tighten the retaining screws (3).
30. Mount the lower cover (1) and tighten the retaining screws (2).
31. Mount the cover plate (5) and tighten the retaining screws (6).
32. Switch on the angle-bar module at the associated safety switch (Chapt. 5.1 Switch current supply on and off in Reg. 2 Important for your safety).
33. Electrically enable with the *SAFE-STOP* pushbutton.
34. Reference the secondary register (Chapt. 4.2 Referencing)
35. Remove the *Work is in progress!* warning signs.

> The drive is replaced and referenced.

4 Basic settings

Contents

This chapter contains the following information:

- Chapt. 4.1 Setting
- Chapt. 4.2 Referencing
- Chapt. 4.3 Testing

Specification

For safety reasons only the adjustment work described in these operating instructions may be performed! All adjustment work not described herein must be performed by qualified WIFAG personnel.

4.1 Setting

4.1.1 Set timing belt tension

Note

Further information about setting timing belt tension is in Chapt. 4.12 Measuring and setting timing belt tensions in Reg. 6 Maintenance.

4.2 Referencing

Note

Reference secondary register according to Chapt. 9.2 Referencing / positioning in Reg. 4 Operation!

4.3 Testing

Note

No tests are necessary on this sub-function group.

13 Dust extraction

1 Overview 13.3

2 Construction and function 13.4
2.1 Dual dust extraction 13.4
2.2 Valves 13.5
2.3 Dust extractor 13.6

3 Replace components 13.8
3.1 WIFAG article numbers 13.8
3.2 Replace components on dust extractor 13.9

4 Basic settings 13.11
4.1 Setting 13.11
4.2 Calibration 13.11
4.3 Testing 13.11

1 Overview

The dust extraction prevents paper dust deposits from forming in the printing units below. Extraction occurs immediately when the web is cut in the angle-bar module. Paper dust extraction at the cutters also lengthens the service lives of the cutters and bottom cutters.
Each angle-bar module has its own dust extractor; it is in the cabinet on side I.

Fig. 1 Overview of dust extraction

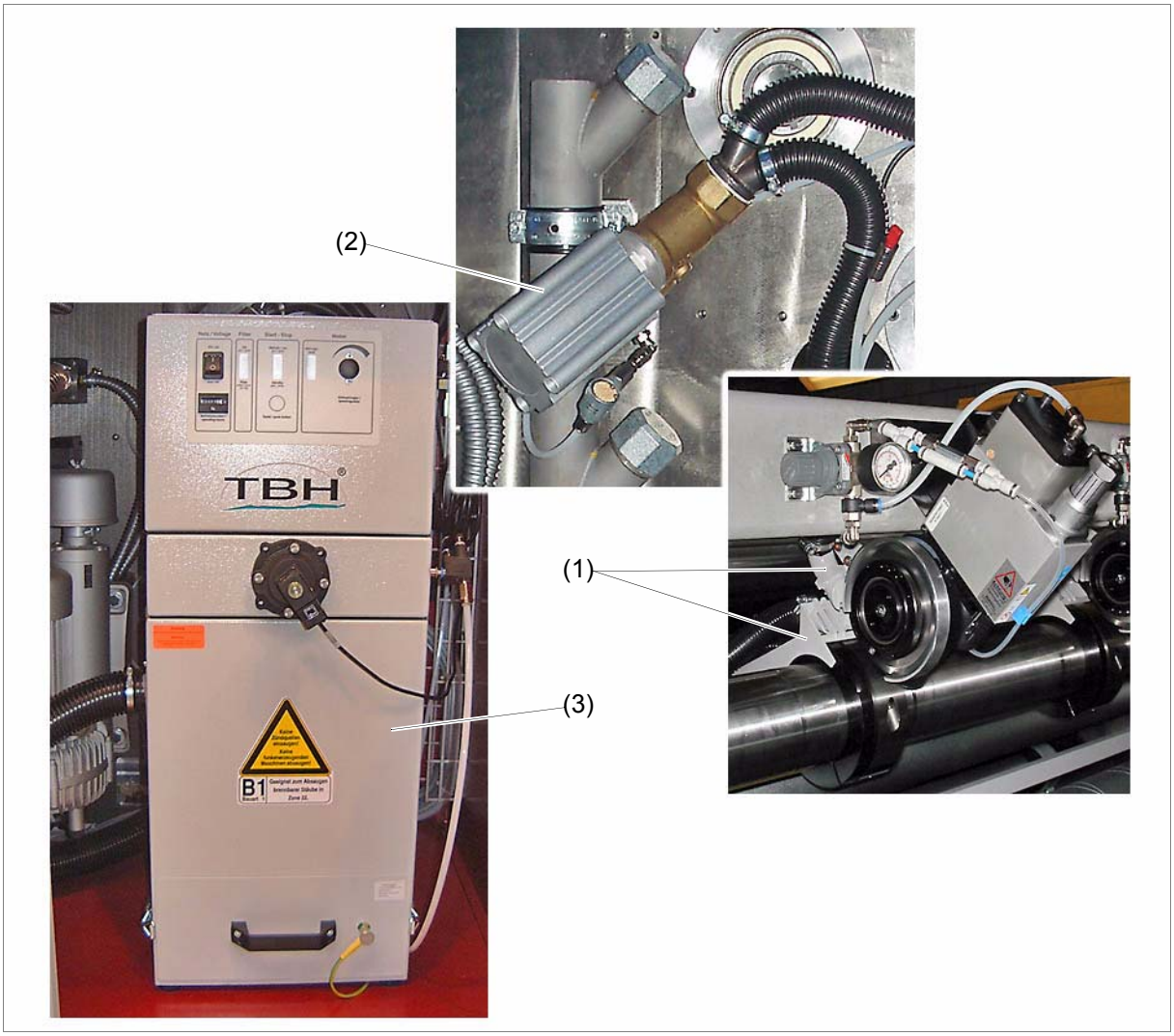

ATU_218_003_01

(1) Dust extraction (Chapt. 2.1 Dual dust extraction)
(2) Pneumatic valves (Chapt. 2.2 Valves)
(3) Dust extractor (Chapt. 2.3 Dust extractor)

2 Construction and function

Contents

This chapter contains the following information:

- Chapt. 2.1 Dual dust extraction
- Chapt. 2.2 Valves
- Chapt. 2.3 Dust extractor

2.1 Dual dust extraction

A complete PSG nozzle (2) and a dust extractor (3) are mounted over the lower cutter so that the paper dust resulting from cutting is removed (Fig. 2). The paper dust is conveyed away through flexible vacuum hoses (1) (4).

Fig. 2 Dust hoods

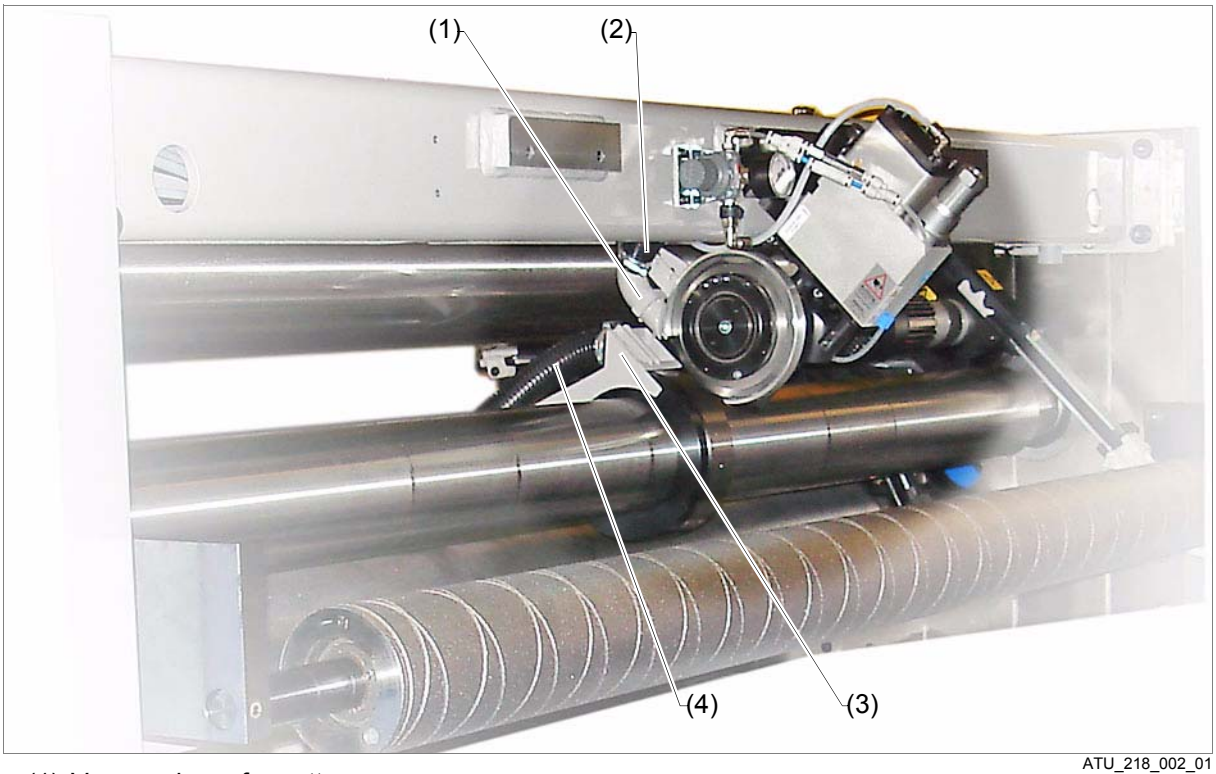

ATU_218_002_01

(1) Vacuum hose for cutter
(2) Compete PSG nozzle for cutter
(3) Dust extraction for lower cutter
(4) Vacuum hose for lower cutter

2.2 Valves

One pneumatic valve (1) is installed per cutting point between dust extractors and vacuum cleaner(s) (Fig. 3). The valve is pneumatically opened when a cutter is thrown on; this activates the dust extraction.

Fig. 3 Valves

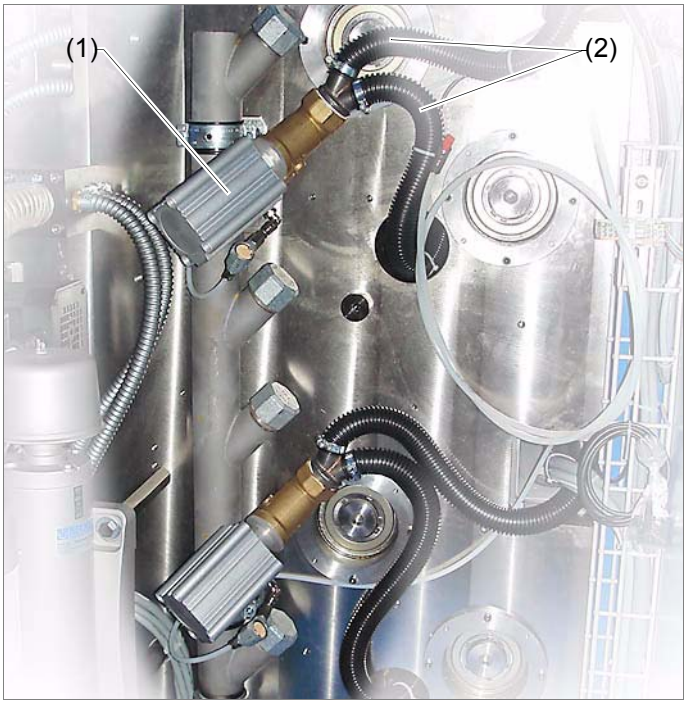

ATU_214_004_01.

(1) Pneumatic valve
(2) Dust extraction hoses

2.3 Dust extractor

DANGER	**Danger!** **Danger of explosion** due to improper operation! => There is no protection against explosion if there is no equipotential bonding or grounding. => No smoking whatsoever is permitted in the immediate vicinity of dust extraction. => Wear a protective mask and safety goggles when carrying out cleaning work. => Comply with the local statutory regulations for work safety.

Note

The machine control system automatically triggers filter cleaning each time the device is switched off and lasts about 2 min.!

The dust extractor (Fig. 4) is deployed as a self-sufficient device and is powered via a 230V mains connection. The paper dust is sucked up through a pipe system, filtered, and collected in a paper dust drawer.

- The paper dust drawer should be emptied in accordance with the manufacturer's documentation in the *Suppliers' documentation* file.
- Changing the filter cartridge should be carried out in accordance with the manufacturer's documentation in the *Suppliers' documentation* file.
- Essential information is found in
  Chapt. 4.16 Maintenance activities on the vacuum cleaner in Reg. 6 Maintenance.

Fig. 4 Dust extractor

ATU_157_008_01

(1) Mains connection
(2) Control console
(3) Compressed air connection
(4) Compressed air tank
(5) Filter housing
(6) Paper dust drawer
(7) Equipotential bonding connection (grounding)

3 Replace components

Contents

This chapter contains the following information:

- Chapt. 3.1 WIFAG article numbers
- Chapt. 3.2 Replace components on dust extractor

Specification

For safety reasons only the replacement work described in these operating instructions may be performed! All replacement work not described herein must be performed by qualified WIFAG personnel.

3.1 WIFAG article numbers

Tab. 1 Overview of components and accessories

Article	Obtainable only from WIFAG	Can be ordered from WIFAG
Filter cartridge	----------	1310974
Pressure reducing valve can be disabled (Fig. 5)	1463773	----------

Fig. 5 Pressure reducing valve can be disabled

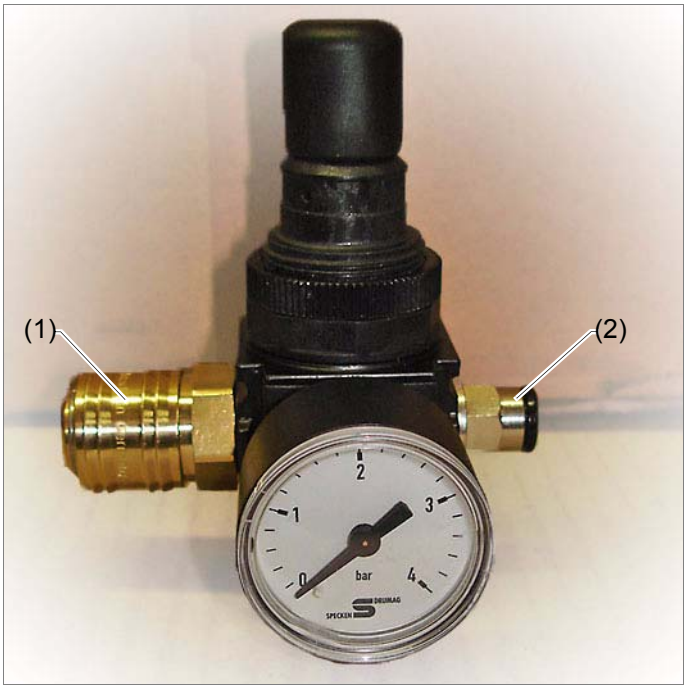

ATU_218_006_01

(1) Pneumatic coupling with one-way restrictor

(2) Compressed air connection (hose)

3.2 Replace components on dust extractor

Requirements

- Production group / function group at standstill

Materials needed

- Cabinet key
- Manufacturer's documentation for dust extractor

DANGER	**Danger!** Risk of a lethal electric **surge**! **Operation** of the function group by others! => Work on electrical switching plants may be carried out only by personnel with the relevant training. => Observe instructions in Chapt. 5.1 Switch current supply on and off in Reg. 2 Important for your safety. => Before working on this electrical device, ensure that the device switch is on *OFF* and the connection cable is disconnected from the power supply.

DANGER	**Danger!** Observe **safety regulations**! **Excess pressure inside the device** due to automatic filter cleaning! => Electrically disable function group (actuate pushbutton *SAFE-STOP*). => Read and observe the information about the dust extractor in the manufacturer's documentation.

Replace components

1. Open the door (1) side I with cabinet key (Fig. 6).
2. Replace the components on the dust extractor (2) according to the manufacturer's documentation in the *Supplier's documentation* file.
3. Close the door (1).

Fig. 6 Enclosure side I

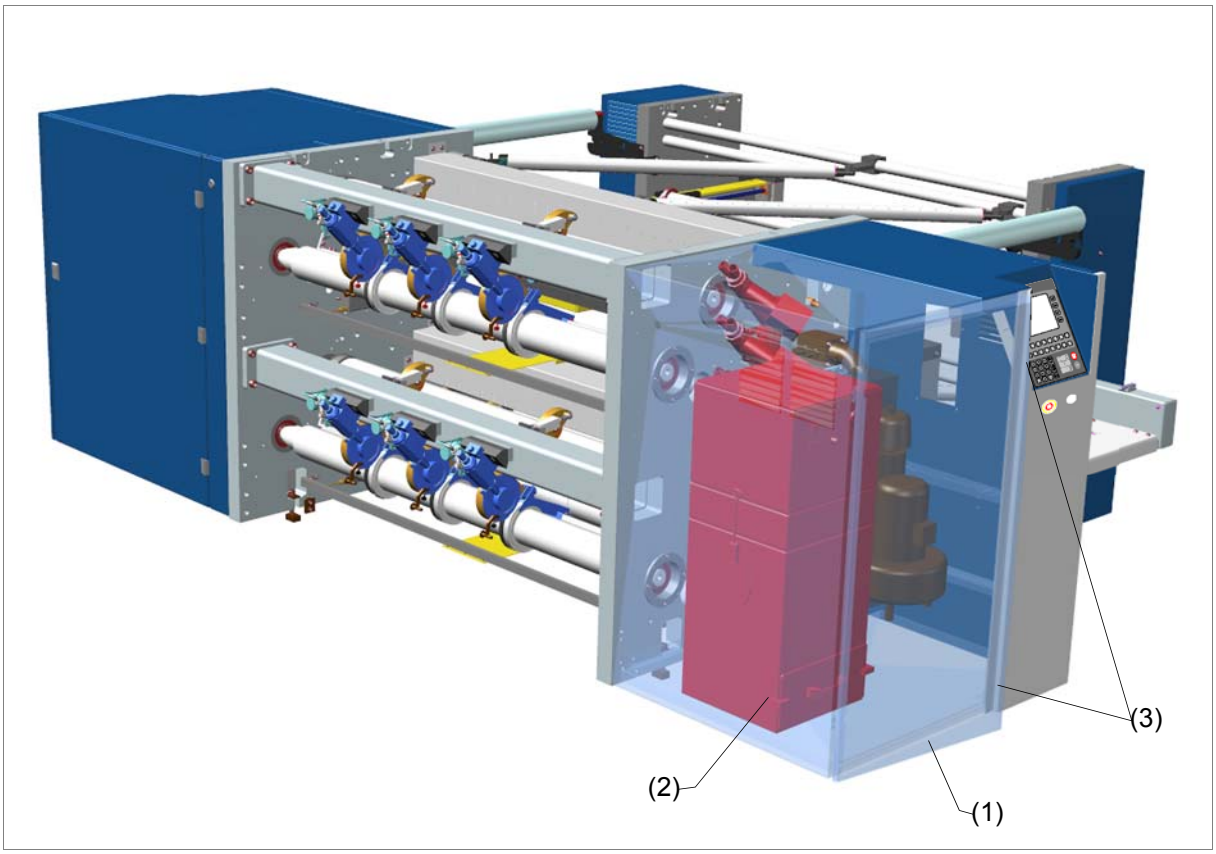

ATU_G003M_01

(1) Front door
(2) Dust extractor
(3) Lock

4 Basic settings

Contents

This chapter contains the following information:

- Chapt. 4.1 Setting
- Chapt. 4.2 Calibration
- Chapt. 4.3 Testing

Specification

For safety reasons only the adjustment work described in these operating instructions may be performed! All adjustment work not described herein must be performed by qualified WIFAG personnel.

4.1 Setting

Note

Carry out settings according to manufacturer's documentation in the *Suppliers' documentation* file.

4.2 Calibration

Note

No calibrations are necessary on this sub-function group.

4.3 Testing

Note

Operation according to Chapt. 12.1 Paper dust extractor in Reg. 4 Operation.

14 Ribbon register

1 Overview **14.3**

2 Construction and function **14.4**
2.1 Linear guides for ribbon register roller **14.4**
2.2 Ribbon register roller adjustment **14.5**

3 Replace components **14.6**
3.1 WIFAG article numbers **14.7**
3.2 Replace ribbon register roller adjustment **14.8**
3.3 Replace drive for ribbon register roller adjustment **14.10**

4 Basic settings **14.14**
4.1 Setting **14.14**
4.1.1 Set timing belt tension 14.14
4.2 Referencing **14.14**
4.3 Testing **14.14**

1 Overview

After the paper web has been cut before the draw roller in the angle-bar module, the ribbons can be fed to the ribbon register. The ribbon register adjusts the individual ribbons for cutting in the folder to the right position.
One ribbon register is installed per angle-bar assembly (Fig. 1). A ribbon register has two adjustment ranges, i.e. two ribbons can be set for each ribbon register.
The ribbon register roller is mounted on a carriage on one side. The carriage is held on guides and is moved by a drive (1) via a ball screw. The adjustment of the ribbon register roller is regulated by the electronic cutting position control.

Fig. 1 Overview of ribbon register

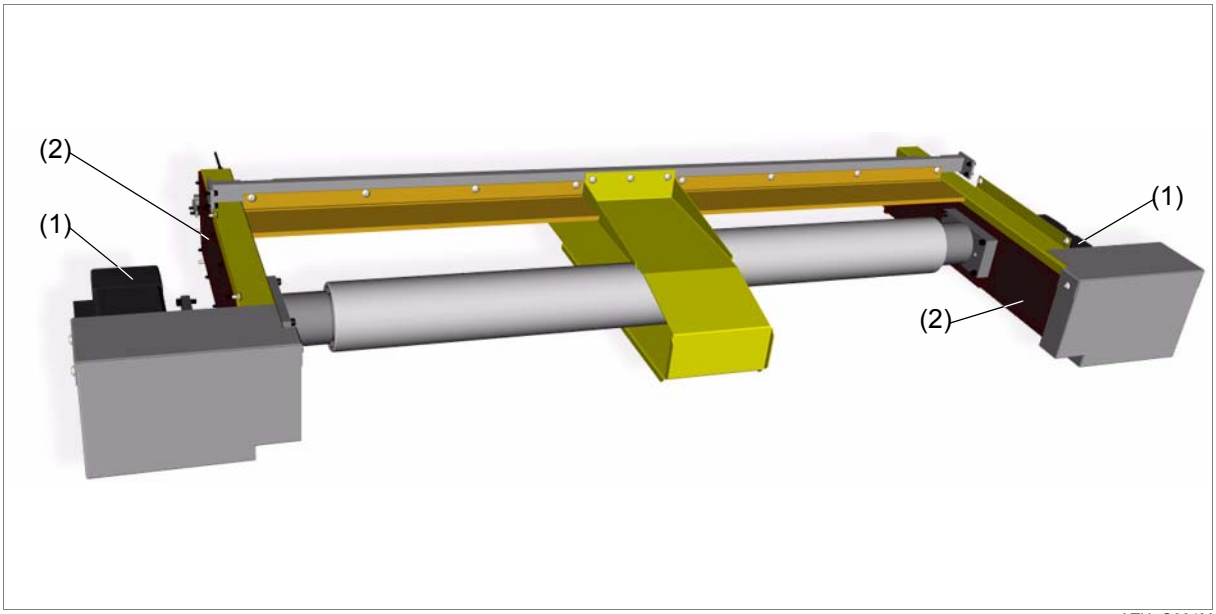

ATU_O001M

(1) Ribbon register drive (Chapt. 2.2 Ribbon register roller adjustment)
(2) Linear guides for ribbon register roller (Chapt. 2.1 Linear guides for ribbon register roller)

2 Construction and function

Contents

This chapter contains the following information:

- Chapt. 2.1 Linear guides for ribbon register roller
- Chapt. 2.2 Ribbon register roller adjustment

2.1 Linear guides for ribbon register roller

The linear guides on the inner side of the walls side I and II serve the horizontal adjustment precision of the ribbon register roller (Fig. 2).
A flange plate (6) mounted on the carriage (5) serves as connection between carriage (5) and axel of the ribbon register roller. The ribbon register roller is mounted on an axle and is freely rotating.
To protect it against dust, a bellows (7) is mounted on both sides of the carriage.
Two inductive limit switches are integrated to prevent carriage collisions.

Fig. 2 Linear guide for ribbon register roller

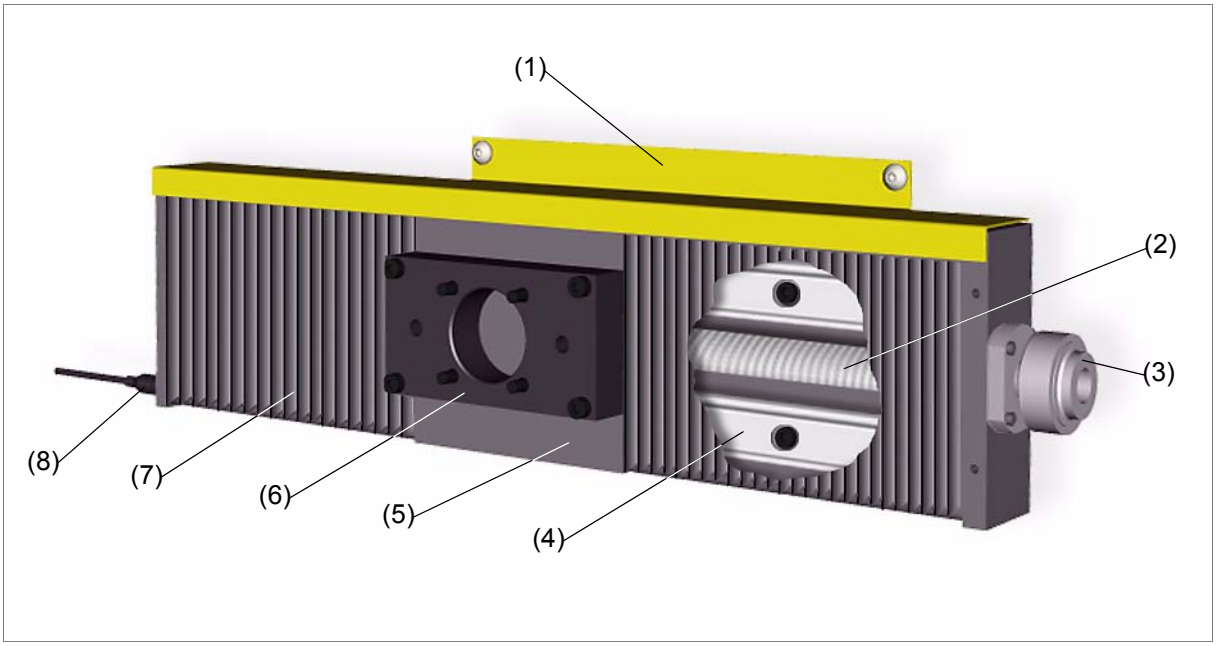

ATU_M003M

(1) Dust protection
(2) Ballscrew spindle
(3) Timing belt pulley
(4) Guide
(5) Carriage
(6) Flange plate
(7) Bellows
(8) Cable to limit switch

2.2 Ribbon register roller adjustment

The horizontal movement of the ribbon register roller (14) is ensured by a ball screw integrated in the linear guide (1) (Fig. 3). Each ribbon register roller is adjusted by means of its own drive. The spindle of the ball screw is driven via a timing belt (9). The rotary motion of the spindle drives a permanently mounted nut in the carriage (12) and thereby displaces the ribbon register roller mounted on the carriage.
The positioning of the ribbon register roller is regulated by the electronic cutting position control.
In an emergency the ribbon register roller can be manually adjusted with an adjusting screw on the ball screw spindle (Chapt. 10.1 Emergency adjustment of the ribbon register roller in Reg. 4 Operation).

Fig. 3 Ribbon register roller drive

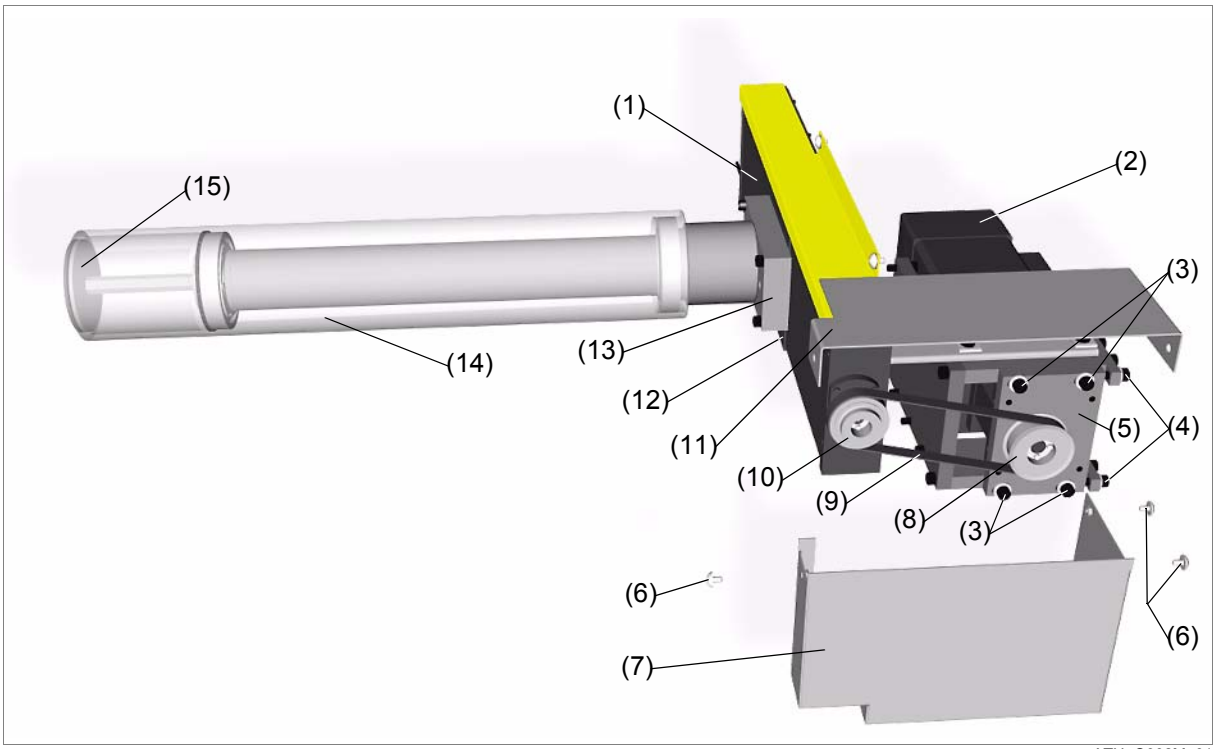

(1) Linear guide
(2) drive
(3) Retaining screws for drive plate
(4) Retaining screws
(5) Drive plate
(6) Retaining screw for lower cover
(7) Lower cover
(8) Timing belt pulley on drive
(9) Timing belt
(10) Timing belt pulley at ball screw spindle
(11) Upper cover
(12) Carriage
(13) Flange plate
(14) Ribbon register roller
(15) protection

3 Replace components

Contents

This chapter contains the following information:

- Chapt. 3.1 WIFAG article numbers
- Chapt. 3.2 Replace ribbon register roller adjustment
- Chapt. 3.3 Replace drive for ribbon register roller adjustment

Specification

For safety reasons only the replacement work described in these operating instructions may be performed! All replacement work not described herein must be performed by qualified WIFAG personnel.

3.1 WIFAG article numbers

Tab. 1 Overview of components and accessories

Article	Obtainable only from WIFAG	Can be ordered from WIFAG
Ribbon register roller drive	1272667	----------
Timing belt HDT 550-5M-15	100700	----------
Grip-ring set DKWN 10-20 (ball screw spindle)	1268733	----------
Grip-ring set DKWN 15-28 (drive)	1268735	----------

3.2 Replace ribbon register roller adjustment

Requirements

- Production group at standstill

Materials needed

- Warning sign *Work is in progress!*
- Allen key set
- Supplied measuring device

⚠ WARNING	**Risk of injury!** **Risk of being trapped and crushed** by rotating timing belt pulleys and timing belt! => De-allocate function group from the production group at the control panel and electrically disable (push the *SAFE-STOP* pushbutton). => Place *Work in progress!* warning signs on the corresponding terminals and control panels.

Removing timing belt

1. Switch off the power supply to the angle-bar module at the associated safety switch and secure against being switched back on (Chapt. 5.1 Switch current supply on and off in Reg. 2 Important for your safety).
2. Loosen retaining screws (2) and remove the lower cover (3) (Fig. 4).
3. Loosen retaining screws (4) on motor plate (8) and slightly tighten.
4. Loosen the tightening screws (5) until the timing belt (7) is relaxed.
5. Remove the timing belt (7).

Install timing belt

6. Place the new timing belt (7) onto timing belt pulleys (6) (9).
7. Tighten the tightening screws (5) until the timing belt (7) is relaxed to 197 - 203 Hz as described in Chapt. 4.12 Measuring and setting timing belt tensions in Reg. 6 Maintenance.
8. Tighten the retaining screws (4).
9. Mount the lower cover (3) and tighten the retaining screws (2).
10. Switch on the angle-bar module at the associated safety switch (Chapt. 5.1 Switch current supply on and off in Reg. 2 Important for your safety).
11. Electrically enable the function group with the *SAFE-STOP* pushbutton.
12. Reference the ribbon register (Chapt. 4.2 Referencing).
13. Remove the *Work is in progress!* warning signs.

> The timing belt is now replaced.

Fig. 4 Ribbon register timing belt change

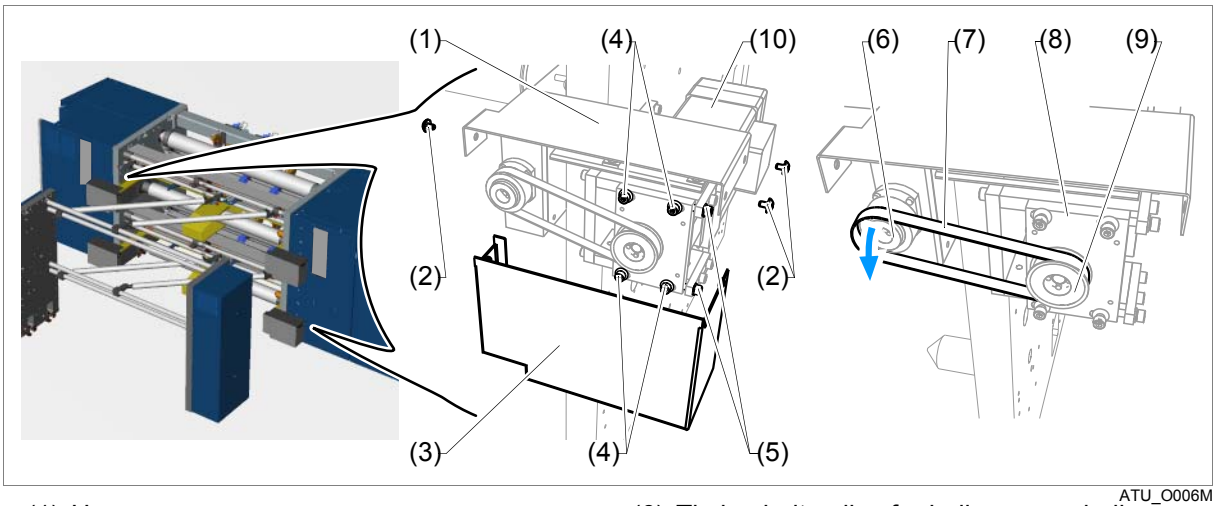

(1) Upper cover
(2) Retaining screw
(3) Lower cover
(4) Retaining screw for motor plate
(5) Tensioning screw
(6) Timing belt pulley for ball screw spindle
(7) Timing belt
(8) Motor plate
(9) Timing belt pulley for drive
(10) drive

3.3 Replace drive for ribbon register roller adjustment

Note

The replacement procedure is identical for the drive of the ribbon register roller adjustment on side I and II.

Requirements

- Production group at standstill

Materials needed

- *WIFAG electrical diagrams W*
- Warning sign *Work is in progress!*
- Multimeter
- Allen key set
- Supplied measuring device
- Torque wrench
- Protective rubber gloves
- Soft cloth
- Cleaning agent
- Oil No. 2

⚠ WARNING	**Risk of injury!** **Risk of being trapped and crushed** by rotating timing belt pulleys and timing belt! => De-allocate function group from the production group at the control panel and electrically disable (push the *SAFE-STOP* pushbutton). => Place *Work in progress!* warning signs on the corresponding terminals and control panels.
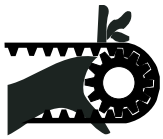	

Drive removal

1. Switch off the power supply to the angle-bar module at the associated safety switch and secure against being switched back on (Chapt. 5.1 Switch current supply on and off in Reg. 2 Important for your safety).
2. Open the door side I or II with cabinet key.

3. Inside the cabinet, electrically disconnect the drive (10) (Chapt. 2.2 Replacing drives in Reg. 11 Electrical setting and commissioning instructions in the *System* file) (Fig. 5).
4. Loosen the retaining screws (2) and remove the lower cover (3).
5. Loosen and remove the retaining screws (5).
6. Loosen the retaining screws (4) on the motor plate (8) one revolution.
7. Loosen and remove the retaining screws (5).
8. Remove the timing belt (7).
9. Loosen the tightening screws (13) on the **grip-ring set** (12) one after the other in **several** steps.
10. Separate the grip-ring set (12) if necessary using the jacking screws.
11. Pull off the timing belt pulley (9) and grip-ring set (12) from the drive shaft (17).
12. Dismantle the grip-ring set (12).
13. Clean the grip-ring set (12), timing belt pulley (9) and drive shaft (14); degrease and rub dry with a soft cloth.
14. Loosen the retaining screws (4) only until the drive (10) can be angled.
15. Loosen and remove the retaining screws (11) on the difficult to access side.
16. Secure the drive (10) with a rope against falling.

⚠ **WARNING**	**Risk of injury!** **Danger of crushing** if drive falls down. Weight is 14 kg! => Take precautions that the drive(s) does not fall when being replaced.

17. Loosen and remove the other retaining screws (11).
18. Remove the drive (10) inside the cabinet.

> This completes drive removal.

Fig. 5 Ribbon register drive change

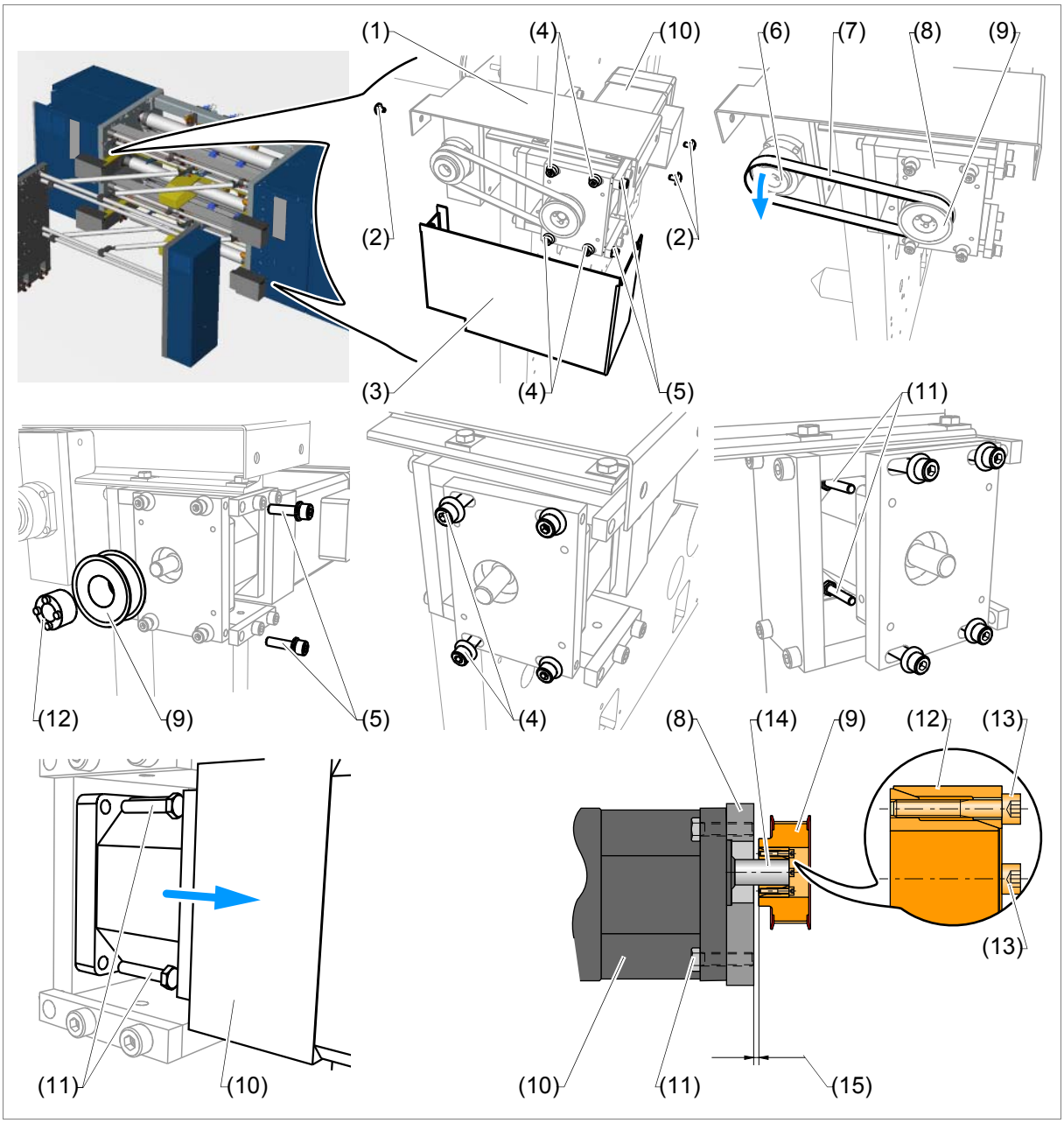

ATU_O006M_01

(1) Upper cover
(2) Retaining screw
(3) Lower cover
(4) Retaining screw for motor plate
(5) Tensioning screw
(6) Timing belt pulley for ball screw spindle
(7) Timing belt
(8) Motor plate
(9) Timing belt pulley for drive
(10) drive
(11) Retaining screw for drive
(12) Grip-ring set
(13) Tensioning screw
(14) Drive shaft
(15) Reference dimension = **1.5 mm**

Install drive

WARNING	**Risk of injury!** **Danger of crushing** if drive falls down. Weight is 14 kg! => Take precautions that the drive(s) does not fall when being replaced.

19. Mount the new drive (10) from the cabinet in the motor plate (8), screw in retaining screws (11) and tighten (Fig. 5).
20. Lightly tighten the retaining screws (4).
21. Lightly oil the grip-ring set (12) with oil No. 2.
22. Push the timing belt pulley (9) with the grip-ring set (12) onto the drive shaft (14) of the new drive and set the reference dimension (15) to 1.5 mm.
23. Tighten the tightening screws (13) on the **grip-ring set** (12) one after the other and in **several** steps until all tightening screws (13) reach the full tightening torque of 2.1 Nm.
24. Place the timing belt (7) onto timing belt pulleys (6) (9) and align.
25. Turn the tightening screws (5) into the motor plate (8).
26. Tighten the tightening screws (5) until the timing belt (7) is relaxed to 197 - 203 Hz as described in Chapt. 4.12 Measuring and setting timing belt tensions in Reg. 6 Maintenance.
27. Tighten the retaining screws (4).
28. Electrically connect drive (10). (Chapt. 2.2 Replacing drives in Reg. 11 Electrical setting and commissioning instructions in the *System* file.
29. Mount the lower cover (3) and tighten the retaining screws (2).
30. Switch on the angle-bar module at the associated safety switch (Chapt. 5.1 Switch current supply on and off in Reg. 2 Important for your safety).
31. Electrically enable the function group with the *SAFE-STOP* pushbutton.
32. Reference the ribbon register (Chapt. 4.2 Referencing).
33. Remove the *Work is in progress!* warning signs.

> The drive is replaced and referenced.

4 Basic settings

Contents

This chapter contains the following information:

- Chapt. 4.1 Setting
- Chapt. 4.2 Referencing
- Chapt. 4.3 Testing

Specification

For safety reasons only the adjustment work described in these operating instructions may be performed! All adjustment work not described herein must be performed by qualified WIFAG personnel.

4.1 Setting

4.1.1 Set timing belt tension

Note

Further information about setting timing belt tension is in Chapt. 4.12 Measuring and setting timing belt tensions in Reg. 6 Maintenance.

4.2 Referencing

Note

Reference ribbon registers according to Chapt. 10.2 Referencing / positioning in Reg. 4 Operation!

4.3 Testing

Note

No tests are necessary on this sub-function group.