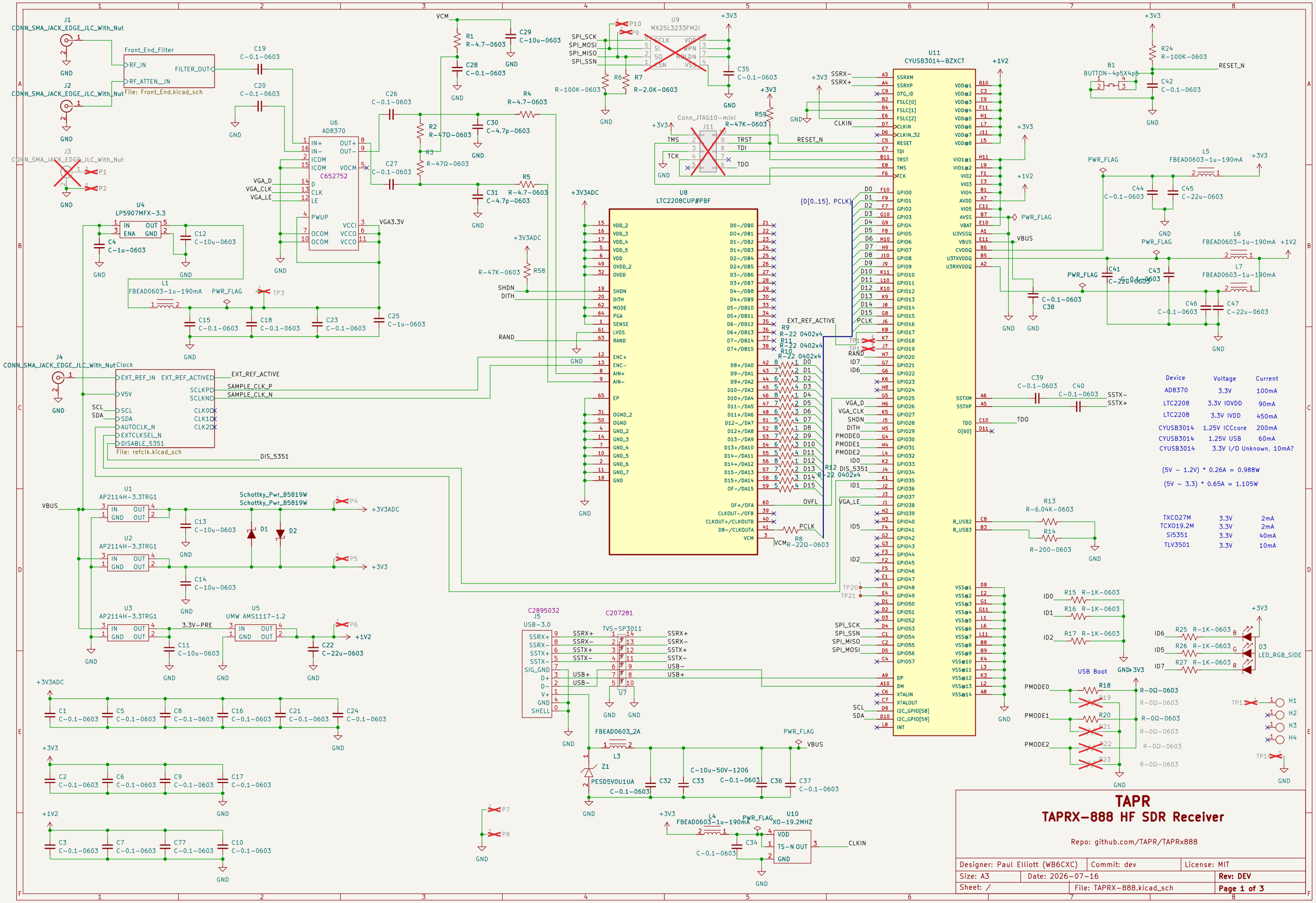
J1
CONN_SMA_JACK_EDGE_JLC_With_Nut
J2
CONN_SMA_JACK_EDGE_JLC_With_Nut
J3
CONN_SMA_JACK_EDGE_JLC_With_Nut
J4
CONN_SMA_JACK_EDGE_JLC_With_Nut
Front_End_Filter
RF_IN
RF_ATTEN__IN
FILTER_OUT
File: Front_End.kicad_sch
U6
AD8370
C652752
U4
LP5907MFX-3.3
U8
LTC2208CUP#PBF
U9
MX25L3233FM2I
U11
CYUSB3014-BZXCT
Clock
EXT_REF_IN
V5V
SCL
SDA
AUTOCLK_N
EXTCLKSEL_N
DISABLE_5351
EXT_REF_ACTIVED
SCLKPD
SCLKND
CLK0
CLK1
CLK2
File: refclk.kicad_sch
U1
AP2114H-3.3TRG1
U2
AP2114H-3.3TRG1
U3
AP2114H-3.3TRG1
U5
UMW AMS1117-1.2
Schottky_Pwr_B5819W
Schottky_Pwr_B5819W
J5
USB-3.0
C2895032
C207281
TVS-SP3011
U7
FBEAD0603_2A
PESD5V0U1UA
U10
XO-19.2MHZ
B1
BUTTON-4p5X4p5
Conn_JTAG10-mini
J11
R13
R-6.04K-0603
R14
R-200-0603
USB Boot
D3
LED_RGB_SIDE
H1
H2
H3
H4
Device Voltage Current
AD8370 3.3V 100mA
LTC2208 3.3V IOVDD 90mA
LTC2208 3.3V IVDD 450mA
CYUSB3014 1.25V ICCcore 200mA
CYUSB3014 1.25V USB 60mA
CYUSB3014 3.3V I/O Unknown, 10mA?
(5V − 1.2V) * 0.26A = 0.988W
(5V − 3.3) * 0.65A = 1.105W
TXCO27M 3.3V 2mA
TCXO19.2M 3.3V 2mA
Si5351 3.3V 40mA
TLV3501 3.3V 10mA
TAPR
TAPRX−888 HF SDR Receiver
Repo: github.com/TAPR/TAPRx888
Designer: Paul Elliott (WB6CXC)
Commit: dev
License: MIT
Size: A3
Date: 2026−07−16
Rev: DEV
Sheet: /
File: TAPRX−888.kicad_sch
Page 1 of 3

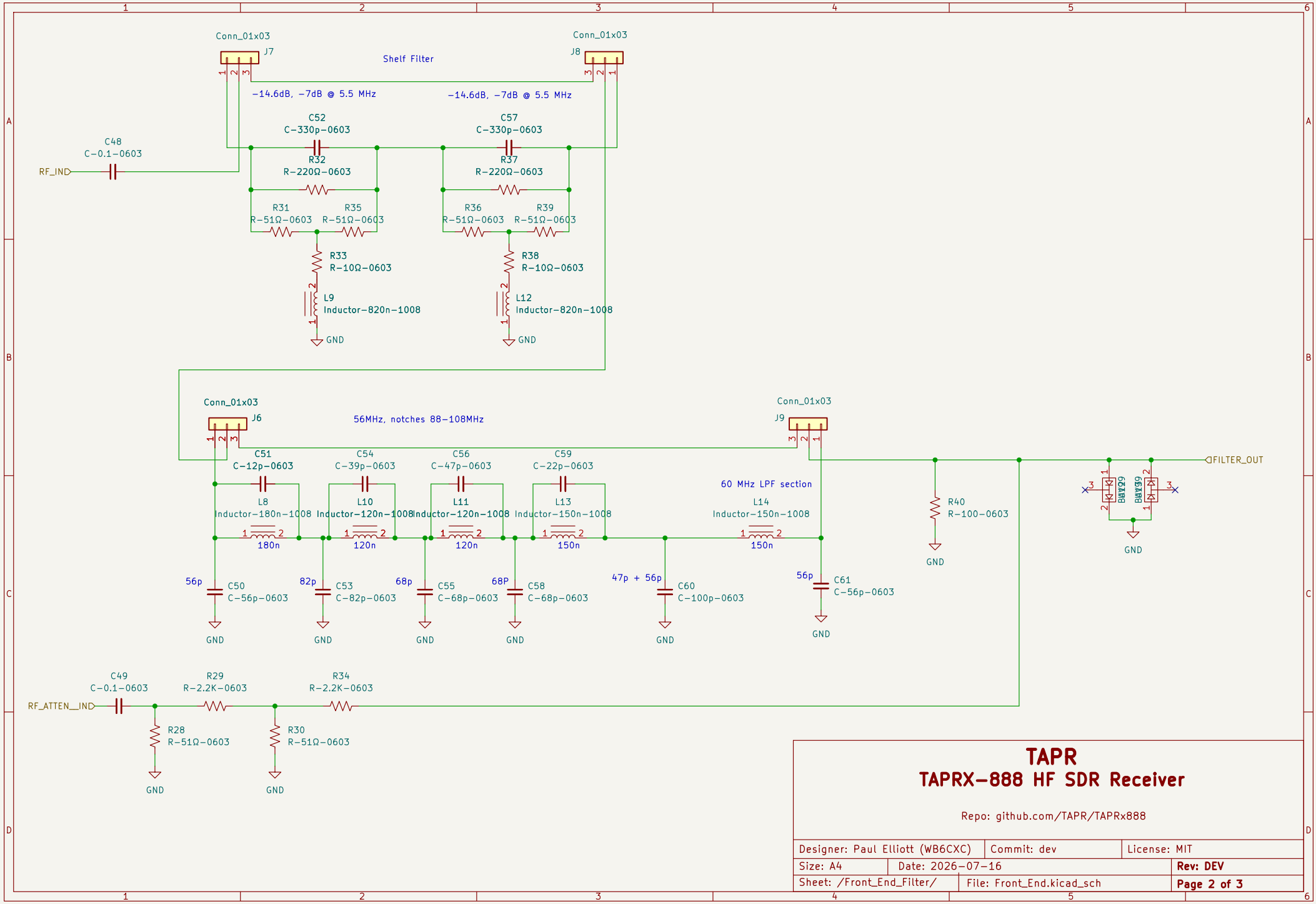

TAPR
TAPRX−888 HF SDR Receiver

Repo: github.com/TAPR/TAPRx888

Designer: Paul Elliott (WB6CXC)	Commit: dev	License: MIT
Size: A4	Date: 2026−07−16	**Rev: DEV**
Sheet: /Front_End_Filter/	File: Front_End.kicad_sch	**Page 2 of 3**

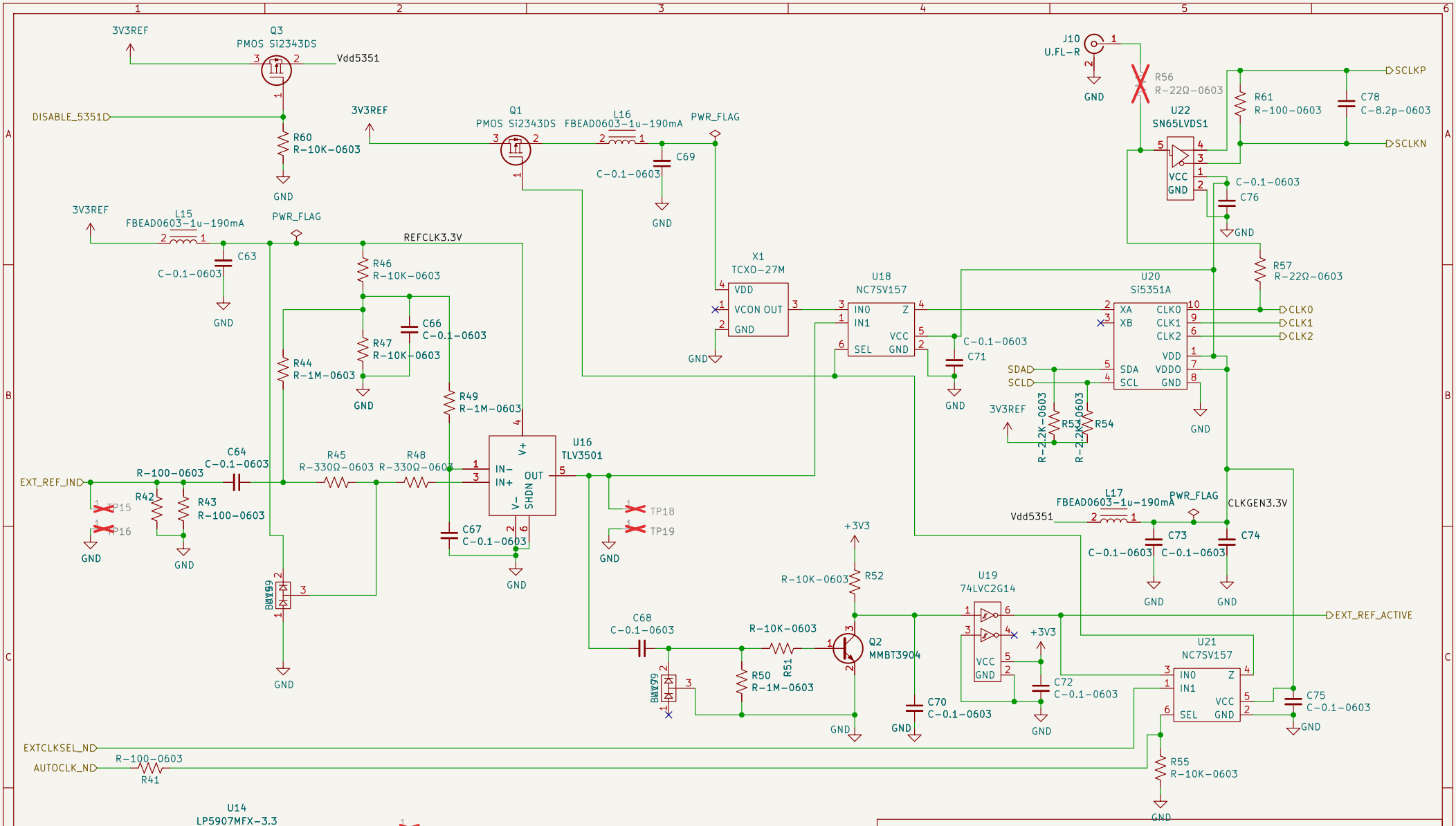

TAPR
TAPRX-888 HF SDR Receiver

Repo: github.com/TAPR/TAPRx888

Designer: Paul Elliott (WB6CXC)	Commit: dev	License: MIT
Size: A4	Date: 2026-07-16	Rev: DEV
Sheet: /Clock/	File: refclk.kicad_sch	Page 3 of 3