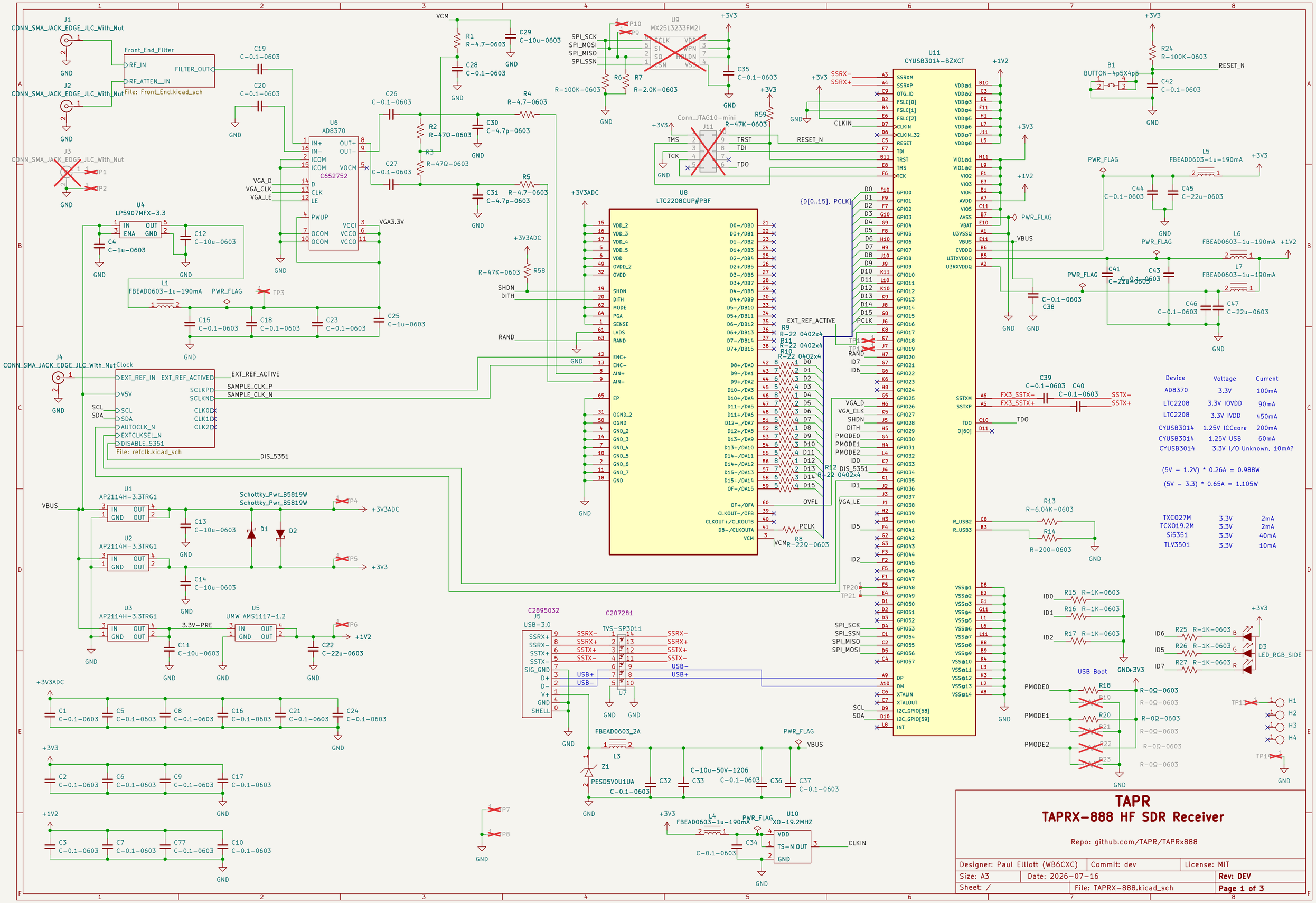
J1
CONN_SMA_JACK_EDGE_JLC_With_Nut
J2
CONN_SMA_JACK_EDGE_JLC_With_Nut
J3
CONN_SMA_JACK_EDGE_JLC_With_Nut
J4
CONN_SMA_JACK_EDGE_JLC_With_Nut
Front_End_Filter
RF_IN
RF_ATTEN__IN
FILTER_OUT
File: Front_End.kicad_sch
C19 C-0.1-0603
C20 C-0.1-0603
VCM
R1 R-4.7-0603
C29 C-10u-0603
C28 C-0.1-0603
U6
AD8370
C652752
IN+
IN-
ICOM
ICOM
D
CLK
LE
PWUP
OCOM
OCOM
OUT+
OUT-
VOCM
VCCI
VCCO
VCCO
VGA_D
VGA_CLK
VGA_LE
VGA3.3V
C26 C-0.1-0603
R2 R-47Ω-0603
R3 R-47Ω-0603
C27 C-0.1-0603
R4 R-4.7-0603
C30 C-4.7p-0603
R5 R-4.7-0603
C31 C-4.7p-0603
U4
LP5907MFX-3.3
IN
ENA
OUT
GND
C4 C-1u-0603
C12 C-10u-0603
L1
FBEAD0603-1u-190mA
PWR_FLAG
TP3
C15 C-0.1-0603
C18 C-0.1-0603
C23 C-0.1-0603
C25 C-1u-0603
+3V3ADC
R58 R-47K-0603
SHDN
DITH
RAND
U9
MX25L3233FM2I
SPI_SCK
SPI_MOSI
SPI_MISO
SPI_SSN
R6 R-100K-0603
R7 R-2.0K-0603
C35 C-0.1-0603
+3V3
Conn_JTAG10-mini
J11
TMS
TCK
TRST
TDI
TDO
R59 R-47K-0603
U8
LTC2208CUP#PBF
VDD_2
VDD_3
VDD_4
VDD_5
VDD
OVDD_2
OVDD
SHDN
DITH
MODE
PGA
SENSE
LVDS
RAND
ENC+
ENC-
AIN+
AIN-
EP
OGND_2
OGND
GND_2
GND_3
GND_4
GND_5
GND_6
GND_7
GND
D0-/DB0
D0+/DB1
D1-/DB2
D1+/DB3
D2-/DB4
D2+/DB5
D3-/DB6
D3+/DB7
D4-/DB8
D4+/DB9
D5-/DB10
D5+/DB11
D6-/DB12
D6+/DB13
D7-/DB14
D7+/DB15
D8+/DA0
D9-/DA1
D9+/DA2
D10-/DA3
D10+/DA4
D11-/DA5
D11+/DA6
D12-_/DA7
D12+/DA8
D13-/DA9
D13+/DA10
D14-/DA11
D14+/DA12
D15-/DA13
D15+/DA14
OF-/DA15
OF+/OFA
CLKOUT-/OFB
CLKOUT+/CLKOUTB
D8-/CLKOUTA
VCM
OVFL
PCLK
R8 R-22Ω-0603
EXT_REF_ACTIVE
R9 R-22 0402x4
R11 R-22 0402x4
R10 R-22 0402x4
R12 R-22 0402x4
DIS_5351
U11
CYUSB3014-BZXCT
SSRXM
SSRXP
OTG_ID
FSLC[0]
FSLC[1]
FSLC[2]
CLKIN
CLKIN_32
RESET
TDI
TRST
TMS
TCK
GPIO0
DP
DM
XTALIN
XTALOUT
I2C_GPIO[58]
I2C_GPIO[59]
INT
SSTXM
SSTXP
TDO
R_USB2
R_USB3
VDD@1
VDD@2
VDD@3
VDD@4
VDD@5
VDD@6
VDD@7
VDD@8
VIO1@1
VIO1@2
VIO2
VIO3
VIO4
AVDD
VIO5
AVSS
VBAT
U3VSSQ
VBUS
CVDDQ
U3TXVDDQ
U3RXVDDQ
VSS@1
VSS@2
VSS@3
VSS@4
VSS@5
VSS@6
VSS@7
VSS@8
VSS@9
VSS@10
VSS@11
VSS@12
VSS@13
VSS@14
+1V2
SSRX-
SSRX+
CLKIN
RESET_N
{D[0..15], PCLK}
VGA_D
VGA_CLK
SHDN
DITH
PMODE0
PMODE1
PMODE2
ID0
DIS_5351
ID1
VGA_LE
ID5
ID2
SPI_SCK
SPI_SSN
SPI_MISO
SPI_MOSI
SCL
SDA
FX3_SSTX-
FX3_SSTX+
SSTX-
SSTX+
C39 C-0.1-0603
C40 C-0.1-0603
B1
BUTTON-4p5X4p5
R24 R-100K-0603
C42 C-0.1-0603
L5
FBEAD0603-1u-190mA
C44 C-0.1-0603
C45 C-22u-0603
L6
FBEAD0603-1u-190mA
L7
FBEAD0603-1u-190mA
C41 C-0.1-0603
C43 C-22u-0603
C46 C-0.1-0603
C47 C-22u-0603
C38 C-0.1-0603
Clock
EXT_REF_IN
V5V
SCL
SDA
AUTOCLK_N
EXTCLKSEL_N
DISABLE_5351
EXT_REF_ACTIVED
SCLKPD
SCLKND
CLK0
CLK1
CLK2
File: refclk.kicad_sch
SAMPLE_CLK_P
SAMPLE_CLK_N
DIS_5351
U1
AP2114H-3.3TRG1
U2
AP2114H-3.3TRG1
U3
AP2114H-3.3TRG1
Schottky_Pwr_B5819W
Schottky_Pwr_B5819W
D1
D2
C13 C-10u-0603
C14 C-10u-0603
C11 C-10u-0603
3.3V-PRE
U5
UMW AMS1117-1.2
C22 C-22u-0603
P4
P5
P6
P7
P8
C2895032
J5
USB-3.0
SSRX+
SSRX-
SSTX+
SSTX-
SIG_GND
D+
D-
V+
GND
SHELL
USB+
USB-
C207281
TVS-SP3011
U7
FBEAD0603_2A
L3
Z1
PESD5V0U1UA
C32 C-0.1-0603
C33 C-10u-50V-1206
C36 C-0.1-0603
C37 C-0.1-0603
VBUS
L4
FBEAD0603-1u-190mA
C34 C-0.1-0603
U10
XO-19.2MHZ
VDD
TS-N OUT
GND
CLKIN
C1 C-0.1-0603
C5 C-0.1-0603
C8 C-0.1-0603
C16 C-0.1-0603
C21 C-0.1-0603
C24 C-0.1-0603
C2 C-0.1-0603
C6 C-0.1-0603
C9 C-0.1-0603
C17 C-0.1-0603
C3 C-0.1-0603
C7 C-0.1-0603
C77 C-0.1-0603
C10 C-0.1-0603
R13 R-6.04K-0603
R14 R-200-0603
R15 R-1K-0603
R16 R-1K-0603
R17 R-1K-0603
R25 R-1K-0603
R26 R-1K-0603
R27 R-1K-0603
D3
LED_RGB_SIDE
USB Boot
R18 R-0Ω-0603
R19 R-0Ω-0603
R20 R-0Ω-0603
R21 R-0Ω-0603
R22 R-0Ω-0603
R23 R-0Ω-0603
H1
H2
H3
H4
TP11
TP14
Device | Voltage | Current
AD8370 | 3.3V | 100mA
LTC2208 | 3.3V IOVDD | 90mA
LTC2208 | 3.3V IVDD | 450mA
CYUSB3014 | 1.25V ICCcore | 200mA
CYUSB3014 | 1.25V USB | 60mA
CYUSB3014 | 3.3V I/O Unknown, 10mA?
(5V − 1.2V) * 0.26A = 0.988W
(5V − 3.3) * 0.65A = 1.105W
TXCO27M | 3.3V | 2mA
TCX019.2M | 3.3V | 2mA
Si5351 | 3.3V | 40mA
TLV3501 | 3.3V | 10mA
TAPR
TAPRX-888 HF SDR Receiver
Repo: github.com/TAPR/TAPRx888
Designer: Paul Elliott (WB6CXC)
Commit: dev
License: MIT
Size: A3
Date: 2026-07-16
Rev: DEV
Sheet: /
File: TAPRX-888.kicad_sch
Page 1 of 3

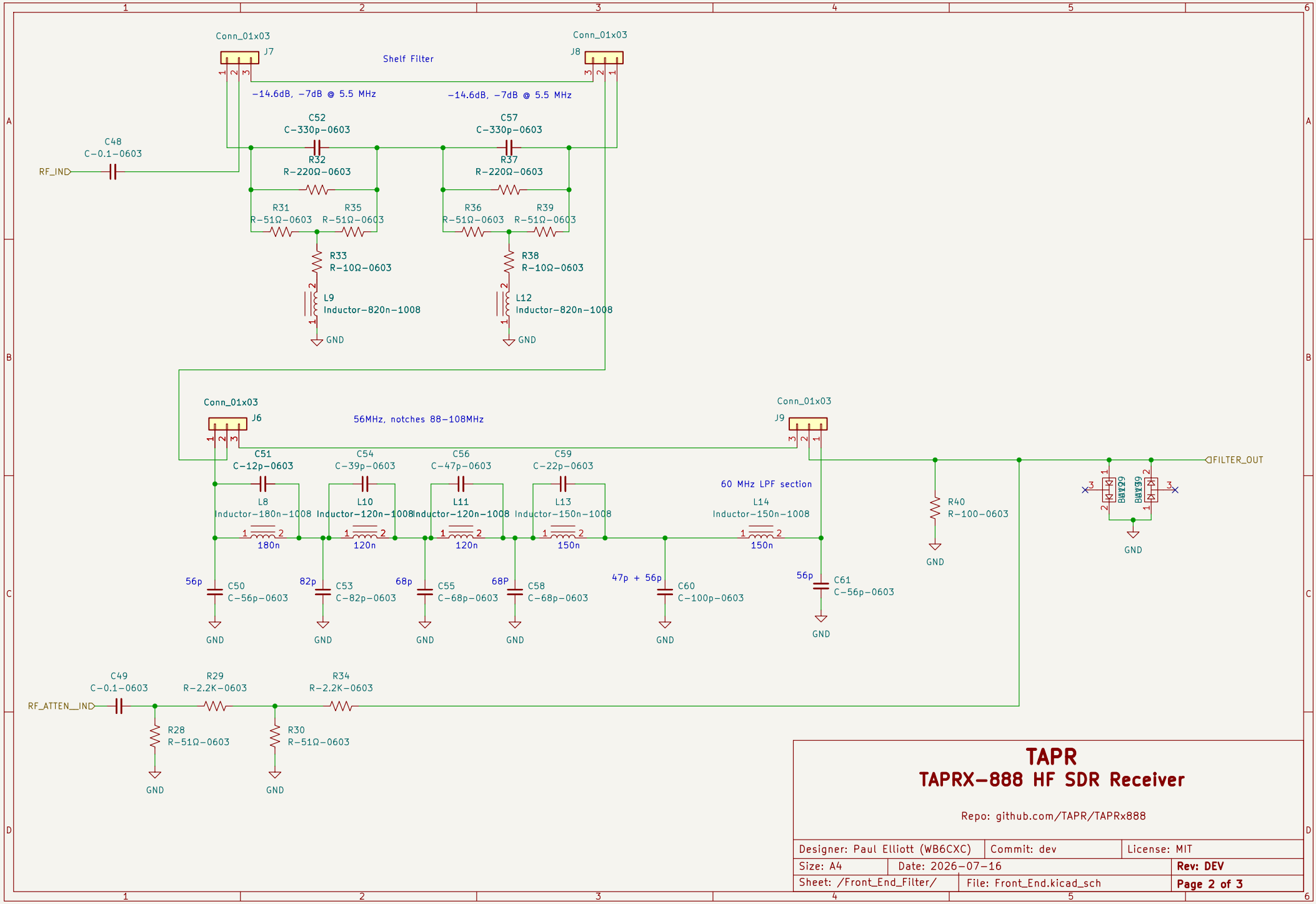

TAPR
TAPRX−888 HF SDR Receiver

Repo: github.com/TAPR/TAPRx888

Designer: Paul Elliott (WB6CXC)	Commit: dev	License: MIT
Size: A4	Date: 2026−07−16	**Rev: DEV**
Sheet: /Front_End_Filter/	File: Front_End.kicad_sch	**Page 2 of 3**

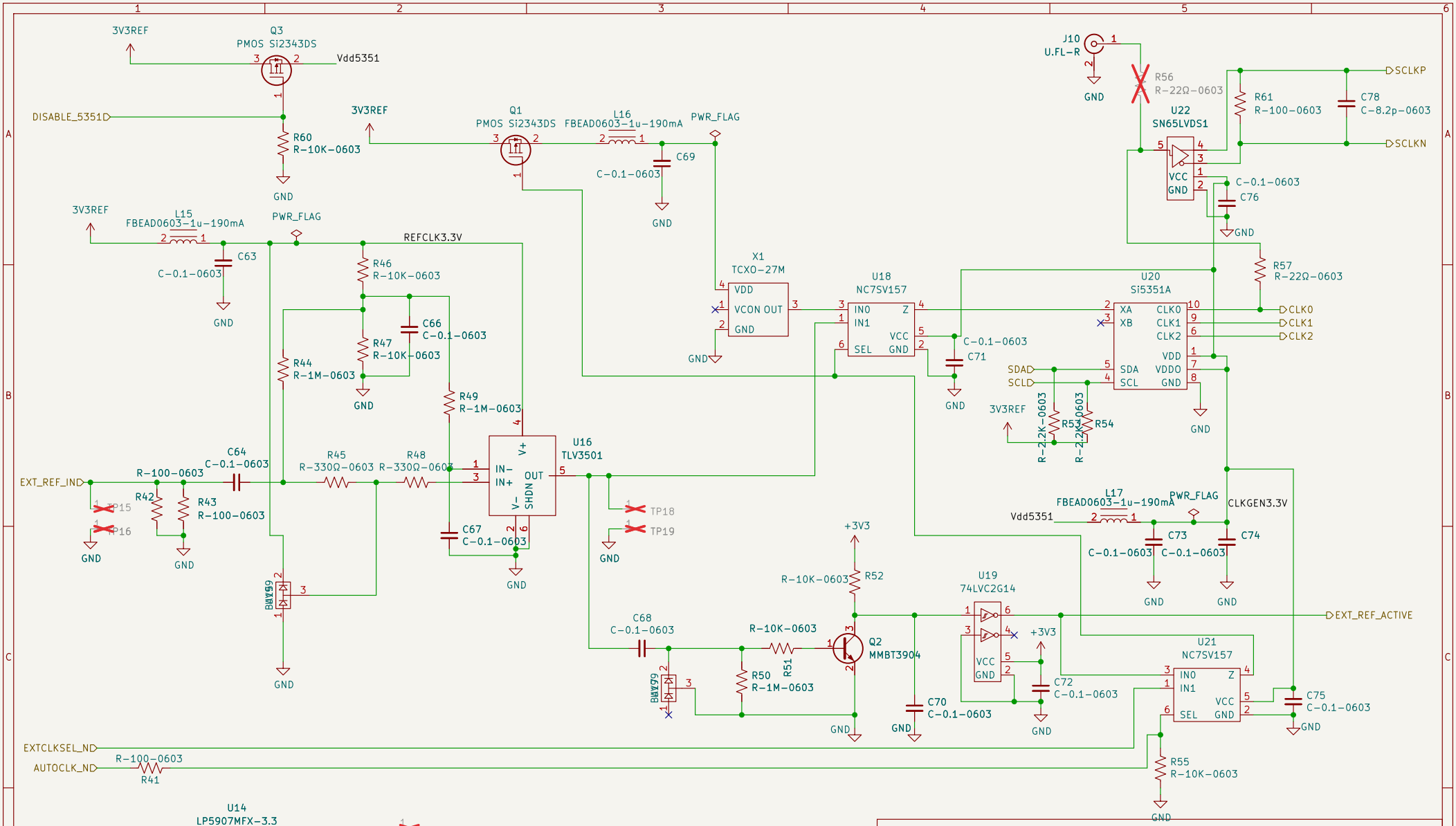

TAPR
TAPRX-888 HF SDR Receiver

Repo: github.com/TAPR/TAPRx888

Designer: Paul Elliott (WB6CXC)	Commit: dev	License: MIT
Size: A4	Date: 2026-07-16	Rev: DEV
Sheet: /Clock/	File: refclk.kicad_sch	Page 3 of 3