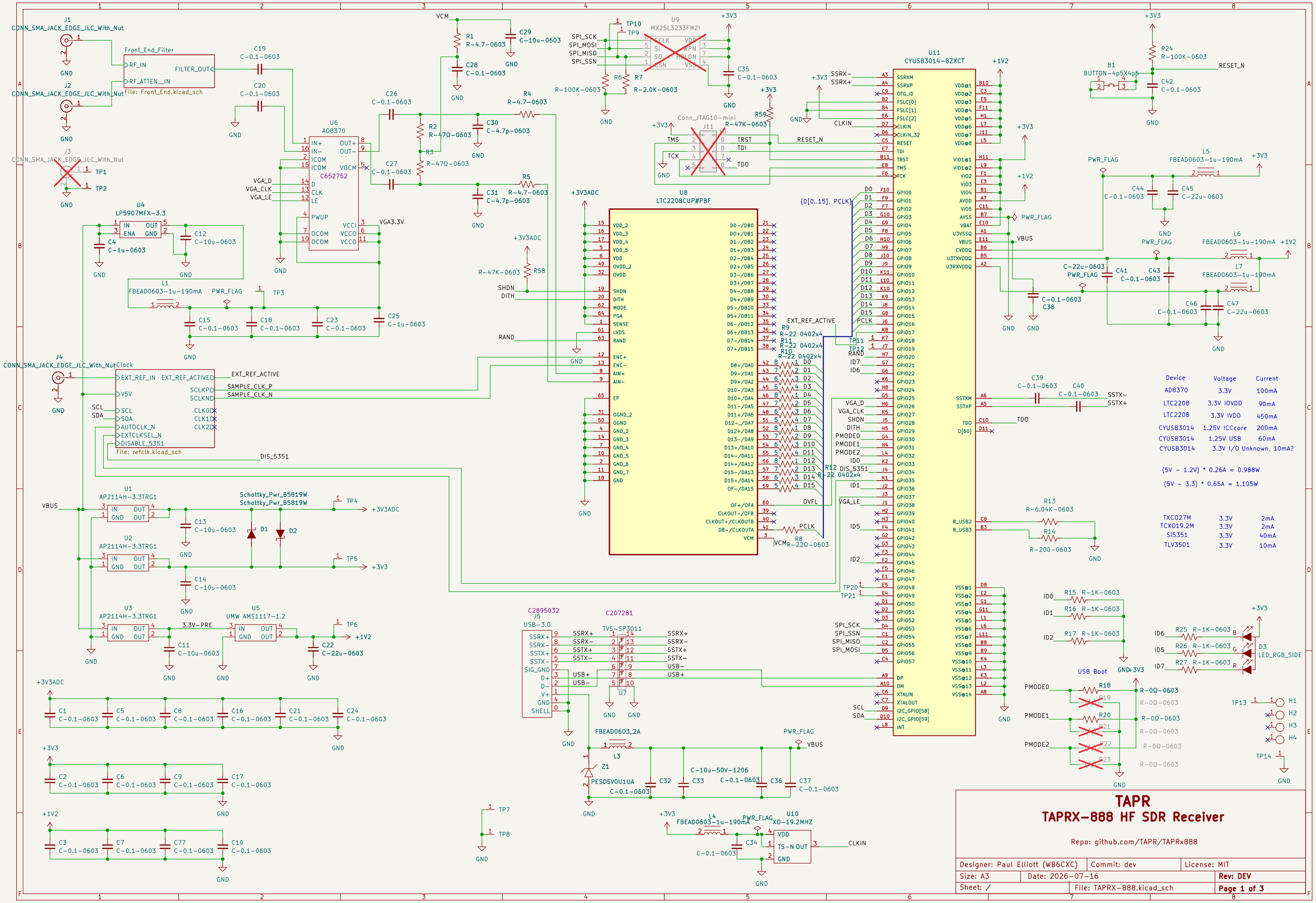

Device	Voltage	Current
AD8370	3.3V	100mA
LTC2208	3.3V IOVDD	90mA
LTC2208	3.3V IVDD	450mA
CYUSB3014	1.25V ICCcore	200mA
CYUSB3014	1.25V USB	60mA
CYUSB3014	3.3V I/O Unknown, 10mA?	

(5V − 1.2V) * 0.26A = 0.988W

(5V − 3.3) * 0.65A = 1.105W

TXCO27M	3.3V	2mA
TCXO19.2M	3.3V	2mA
Si5351	3.3V	40mA
TLV3501	3.3V	10mA

TAPR
TAPRX-888 HF SDR Receiver

Repo: github.com/TAPR/TAPRx888

Designer: Paul Elliott (WB6CXC)	Commit: dev	License: MIT
Size: A3	Date: 2026-07-16	Rev: DEV
Sheet: /	File: TAPRX-888.kicad_sch	Page 1 of 3

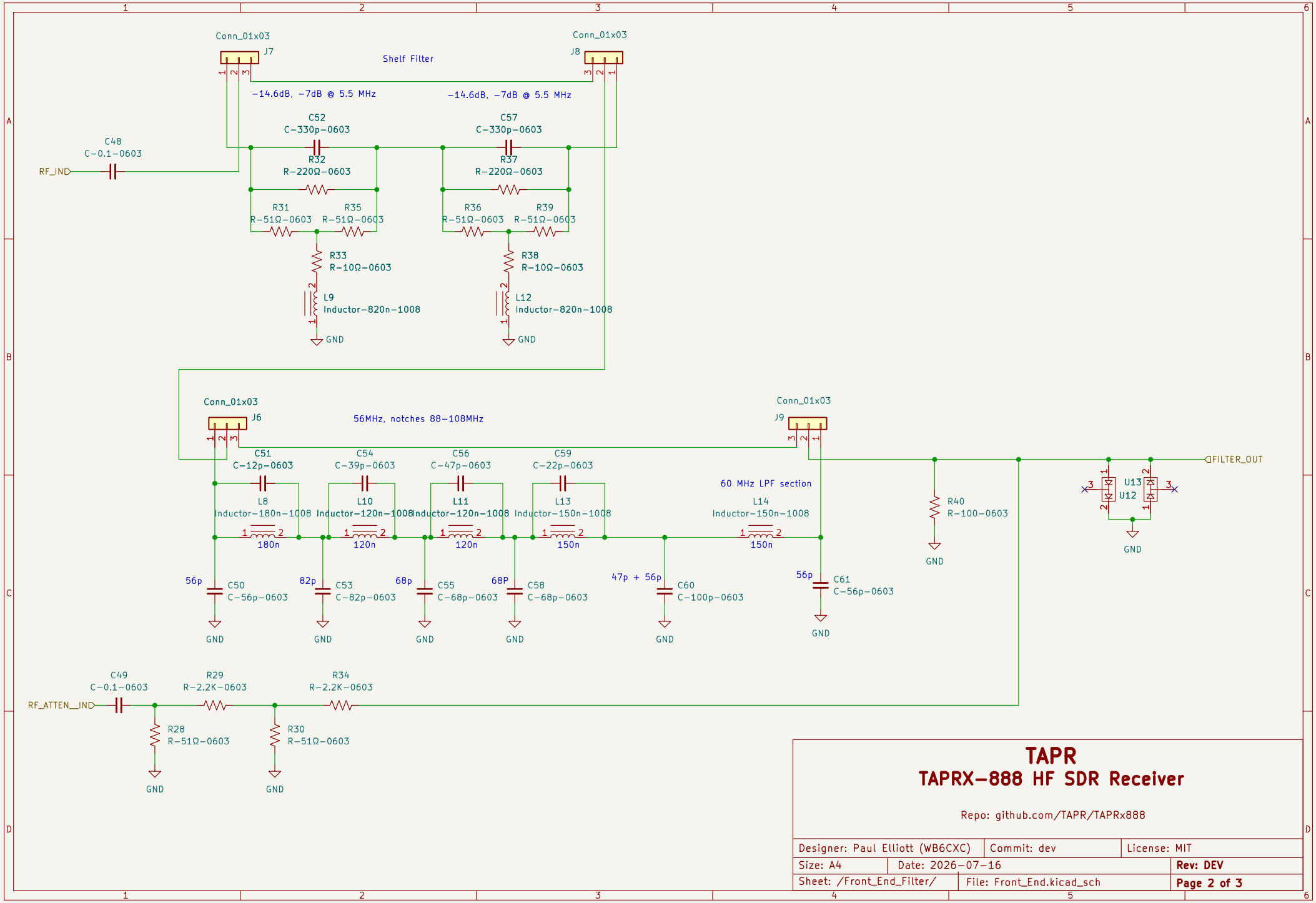

TAPR
TAPRX−888 HF SDR Receiver

Repo: github.com/TAPR/TAPRx888

Designer: Paul Elliott (WB6CXC)	Commit: dev	License: MIT
Size: A4	Date: 2026−07−16	**Rev: DEV**
Sheet: /Front_End_Filter/	File: Front_End.kicad_sch	**Page 2 of 3**

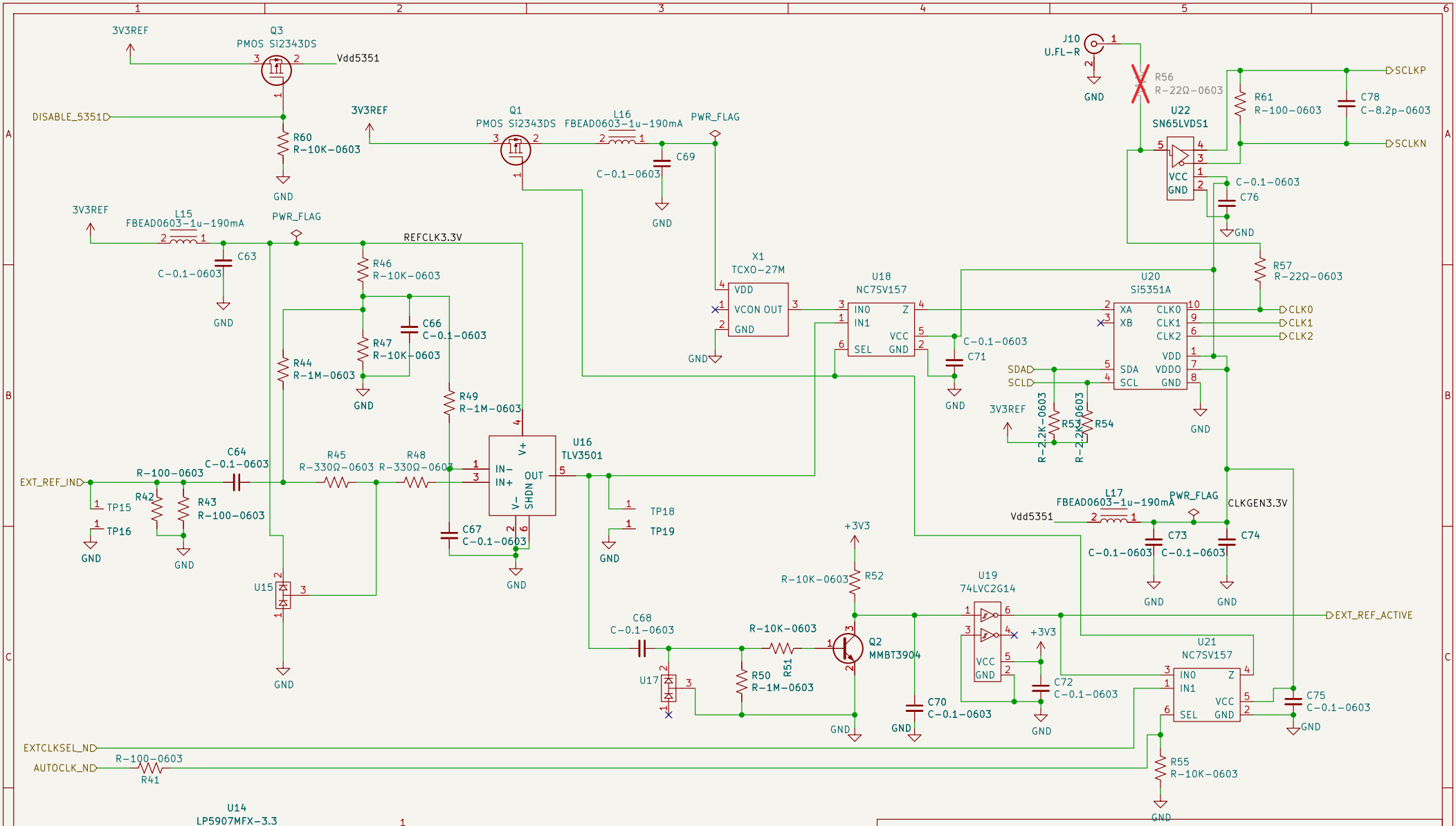

TAPR
TAPRX-888 HF SDR Receiver

Repo: github.com/TAPR/TAPRx888

Designer: Paul Elliott (WB6CXC)	Commit: dev	License: MIT
Size: A4	Date: 2026-07-16	Rev: DEV
Sheet: /Clock/	File: refclk.kicad_sch	Page 3 of 3