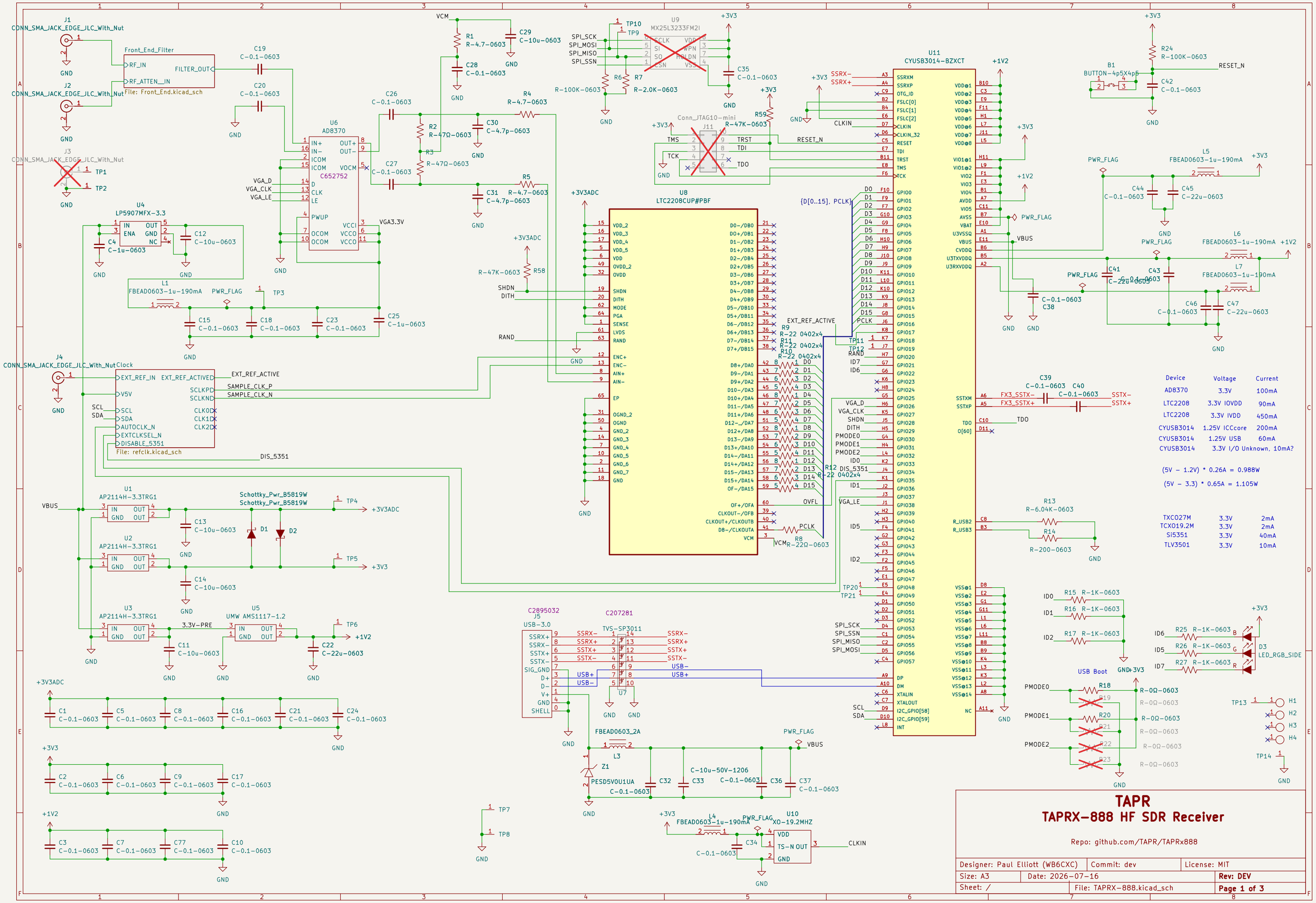
J1
CONN_SMA_JACK_EDGE_JLC_With_Nut
J2
CONN_SMA_JACK_EDGE_JLC_With_Nut
J3
CONN_SMA_JACK_EDGE_JLC_With_Nut
J4
CONN_SMA_JACK_EDGE_JLC_With_Nut
Front_End_Filter
RF_IN
RF_ATTEN__IN
FILTER_OUT
File: Front_End.kicad_sch
C19 C-0.1-0603
C20 C-0.1-0603
VCM
R1 R-4.7-0603
C29 C-10u-0603
C28 C-0.1-0603
U6
AD8370
C652752
IN+
IN-
ICOM
D
CLK
LE
PWUP
OUT+
OUT-
VOCM
VCCI
VCCO
OCOM
VGA_D
VGA_CLK
VGA_LE
VGA3.3V
C26 C-0.1-0603
C27 C-0.1-0603
R2 R-47Ω-0603
R3 R-47Ω-0603
R4 R-4.7-0603
C30 C-4.7p-0603
R5 R-4.7-0603
C31 C-4.7p-0603
U4
LP5907MFX-3.3
IN
ENA
OUT
GND
NC
C4 C-1u-0603
C12 C-10u-0603
L1
FBEAD0603-1u-190mA
PWR_FLAG
TP3
C15 C-0.1-0603
C18 C-0.1-0603
C23 C-0.1-0603
C25 C-1u-0603
+3V3ADC
R58 R-47K-0603
SHDN
DITH
RAND
U8
LTC2208CUP#PBF
VDD_2
VDD_3
VDD_4
VDD_5
VDD
OVDD_2
OVDD
SHDN
DITH
MODE
PGA
SENSE
LVDS
RAND
ENC+
ENC-
AIN+
AIN-
EP
OGND_2
OGND
GND_2
GND_3
GND_4
GND_5
GND_6
GND_7
GND
D0-/DB0
D0+/DB1
D1-/DB2
D1+/DB3
D2-/DB4
D2+/DB5
D3-/DB6
D3+/DB7
D4-/DB8
D4+/DB9
D5-/DB10
D5+/DB11
D6-/DB12
D6+/DB13
D7-/DB14
D7+/DB15
D8+/DA0
D9-/DA1
D9+/DA2
D10-/DA3
D10+/DA4
D11-/DA5
D11+/DA6
D12-_/DA7
D12+/DA8
D13-/DA9
D13+/DA10
D14-/DA11
D14+/DA12
D15-/DA13
D15+/DA14
OF-/DA15
OF+/OFA
CLKOUT-/OFB
CLKOUT+/CLKOUTB
D8-/CLKOUTA
VCM
OVFL
PCLK
R9 R-22 0402x4
R11 R-22 0402x4
R10 R-22 0402x4
R12 R-22 0402x4
R8 R-22Ω-0603
EXT_REF_ACTIVE
U9
MX25L3233FM2I
TP10
TP9
SPI_SCK
SPI_MOSI
SPI_MISO
SPI_SSN
R6 R-100K-0603
R7 R-2.0K-0603
C35 C-0.1-0603
+3V3
Conn_JTAG10-mini
J11
TMS
TCK
TRST
TDI
TDO
R59 R-47K-0603
RESET_N
U11
CYUSB3014-BZXCT
SSRXM
SSRXP
OTG_ID
FSLC[0]
FSLC[1]
FSLC[2]
CLKIN
CLKIN_32
RESET
TDI
TRST
TMS
TCK
GPIO0
GPIO1
GPIO2
GPIO3
GPIO4
GPIO5
GPIO6
GPIO7
GPIO8
GPIO9
GPIO10
GPIO11
GPIO12
GPIO13
GPIO14
GPIO15
GPIO16
GPIO17
GPIO18
GPIO19
GPIO20
GPIO21
GPIO22
GPIO23
GPIO24
GPIO25
GPIO26
GPIO27
GPIO28
GPIO29
GPIO30
GPIO31
GPIO32
GPIO33
GPIO34
GPIO35
GPIO36
GPIO37
GPIO38
GPIO39
GPIO40
GPIO41
GPIO42
GPIO43
GPIO44
GPIO45
GPIO46
GPIO47
GPIO48
GPIO49
GPIO50
GPIO51
GPIO52
GPIO53
GPIO54
GPIO55
GPIO56
GPIO57
DP
DM
XTALIN
XTALOUT
I2C_GPIO[58]
I2C_GPIO[59]
INT
SSRX-
SSRX+
CLKIN
RESET_N
{D[0..15], PCLK}
D0
D1
D2
D3
D4
D5
D6
D7
D8
D9
D10
D11
D12
D13
D14
D15
PCLK
RAND
ID7
ID6
VGA_D
VGA_CLK
SHDN
DITH
PMODE0
PMODE1
PMODE2
ID0
DIS_5351
ID1
VGA_LE
ID5
ID2
SPI_SCK
SPI_SSN
SPI_MISO
SPI_MOSI
SCL
SDA
VDD@1
VDD@2
VDD@3
VDD@4
VDD@5
VDD@6
VDD@7
VDD@8
VIO1@1
VIO1@2
VIO2
VIO3
VIO4
AVDD
VIO5
AVSS
VBAT
U3VSSQ
VBUS
CVDDQ
U3TXVDDQ
U3RXVDDQ
SSTXM
SSTXP
TDO
O[60]
R_USB2
R_USB3
VSS@1
VSS@2
VSS@3
VSS@4
VSS@5
VSS@6
VSS@7
VSS@8
VSS@9
VSS@10
VSS@11
VSS@12
VSS@13
VSS@14
NC
+1V2
PWR_FLAG
VBUS
C38 C-0.1-0603
B1
BUTTON-4p5X4p5
R24 R-100K-0603
C42 C-0.1-0603
L5
FBEAD0603-1u-190mA
C44 C-0.1-0603
C45 C-22u-0603
L6
FBEAD0603-1u-190mA
L7
FBEAD0603-1u-190mA
C41 C-22u-0603
C43 C-0.1-0603
C46 C-0.1-0603
C47 C-22u-0603
C39 C-0.1-0603
C40 C-0.1-0603
FX3_SSTX-
FX3_SSTX+
SSTX-
SSTX+
R13 R-6.04K-0603
R14 R-200-0603
U1
AP2114H-3.3TRG1
U2
AP2114H-3.3TRG1
U3
AP2114H-3.3TRG1
Schottky_Pwr_B5819W
D1
D2
TP4
TP5
C13 C-10u-0603
C14 C-10u-0603
U5
UMW AMS1117-1.2
3.3V-PRE
TP6
C11 C-10u-0603
C22 C-22u-0603
C2895032
J5
USB-3.0
SSRX+
SSRX-
SSTX+
SSTX-
SIG_GND
D+
D-
V+
GND
SHELL
USB+
USB-
C207281
TVS-SP3011
U7
FBEAD0603_2A
L3
Z1
PESD5V0U1UA
C32 C-0.1-0603
C33 C-10u-50V-1206
C36 C-0.1-0603
C37 C-0.1-0603
TP7
TP8
L4
FBEAD0603-1u-190mA
C34 C-0.1-0603
U10
XO-19.2MHZ
VDD
TS-N OUT
GND
CLKIN
C1 C-0.1-0603
C5 C-0.1-0603
C8 C-0.1-0603
C16 C-0.1-0603
C21 C-0.1-0603
C24 C-0.1-0603
C2 C-0.1-0603
C6 C-0.1-0603
C9 C-0.1-0603
C17 C-0.1-0603
C3 C-0.1-0603
C7 C-0.1-0603
C77 C-0.1-0603
C10 C-0.1-0603
Clock
EXT_REF_IN
V5V
SCL
SDA
AUTOCLK_N
EXTCLKSEL_N
DISABLE_5351
EXT_REF_ACTIVED
SCLKPD
SCLKND
CLK0D
CLK1D
CLK2D
File: refclk.kicad_sch
SAMPLE_CLK_P
SAMPLE_CLK_N
DIS_5351
R15 R-1K-0603
R16 R-1K-0603
R17 R-1K-0603
R25 R-1K-0603
R26 R-1K-0603
R27 R-1K-0603
D3
LED_RGB_SIDE
USB Boot
R18 R-0Ω-0603
R19 R-0Ω-0603
R20 R-0Ω-0603
R21 R-0Ω-0603
R22 R-0Ω-0603
R23 R-0Ω-0603
PMODE0
PMODE1
PMODE2
TP13
TP14
H1
H2
H3
H4
Device Voltage Current
AD8370 3.3V 100mA
LTC2208 3.3V IOVDD 90mA
LTC2208 3.3V IVDD 450mA
CYUSB3014 1.25V ICCcore 200mA
CYUSB3014 1.25V USB 60mA
CYUSB3014 3.3V I/O Unknown, 10mA?
(5V − 1.2V) * 0.26A = 0.988W
(5V − 3.3) * 0.65A = 1.105W
TXCO27M 3.3V 2mA
TCXO19.2M 3.3V 2mA
Si5351 3.3V 40mA
TLV3501 3.3V 10mA
TAPR
TAPRX-888 HF SDR Receiver
Repo: github.com/TAPR/TAPRx888
Designer: Paul Elliott (WB6CXC)
Commit: dev
License: MIT
Size: A3
Date: 2026-07-16
Rev: DEV
Sheet: /
File: TAPRX-888.kicad_sch
Page 1 of 3

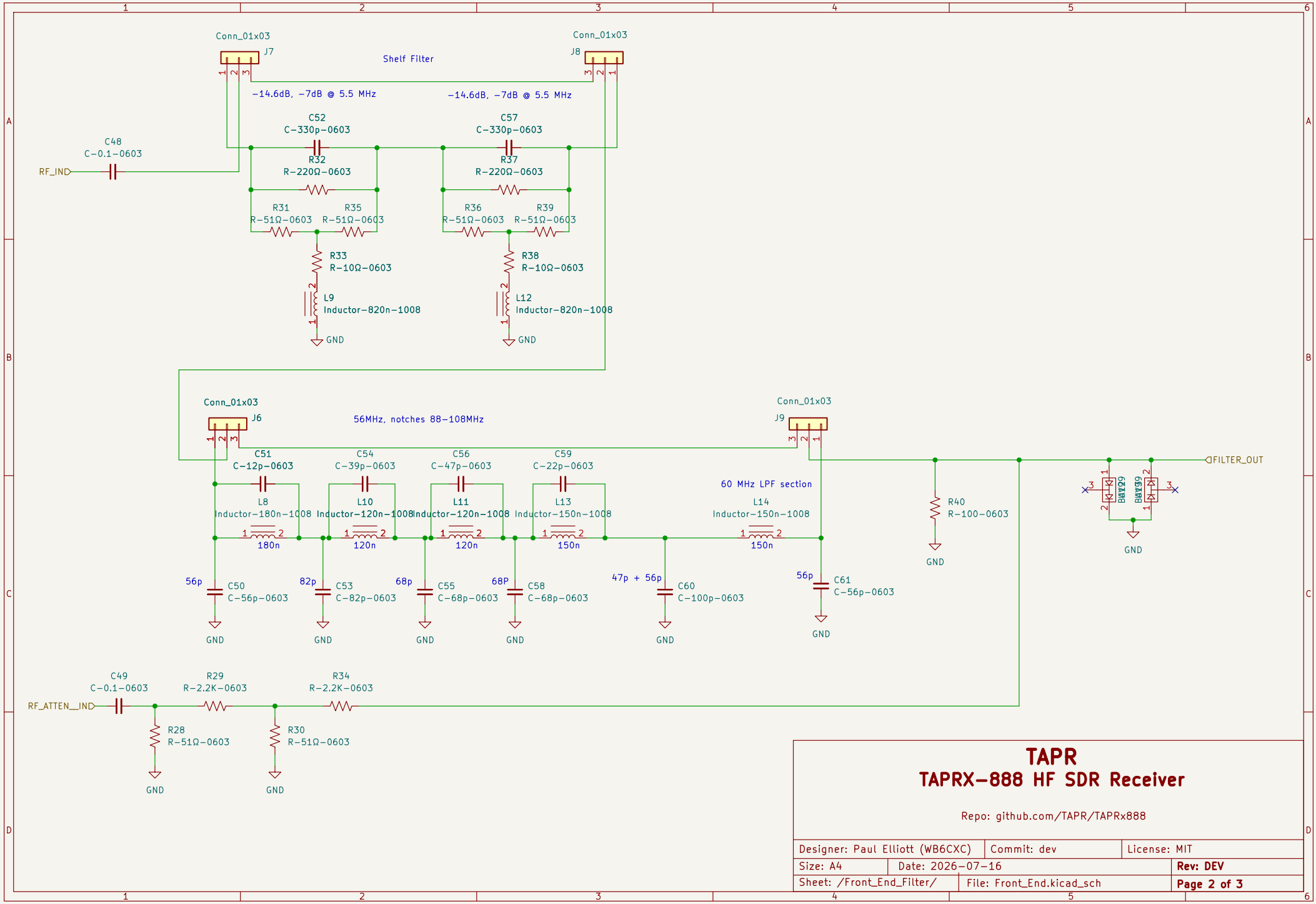

TAPR
TAPRX−888 HF SDR Receiver

Repo: github.com/TAPR/TAPRx888

Designer: Paul Elliott (WB6CXC)	Commit: dev	License: MIT
Size: A4	Date: 2026−07−16	**Rev: DEV**
Sheet: /Front_End_Filter/	File: Front_End.kicad_sch	**Page 2 of 3**

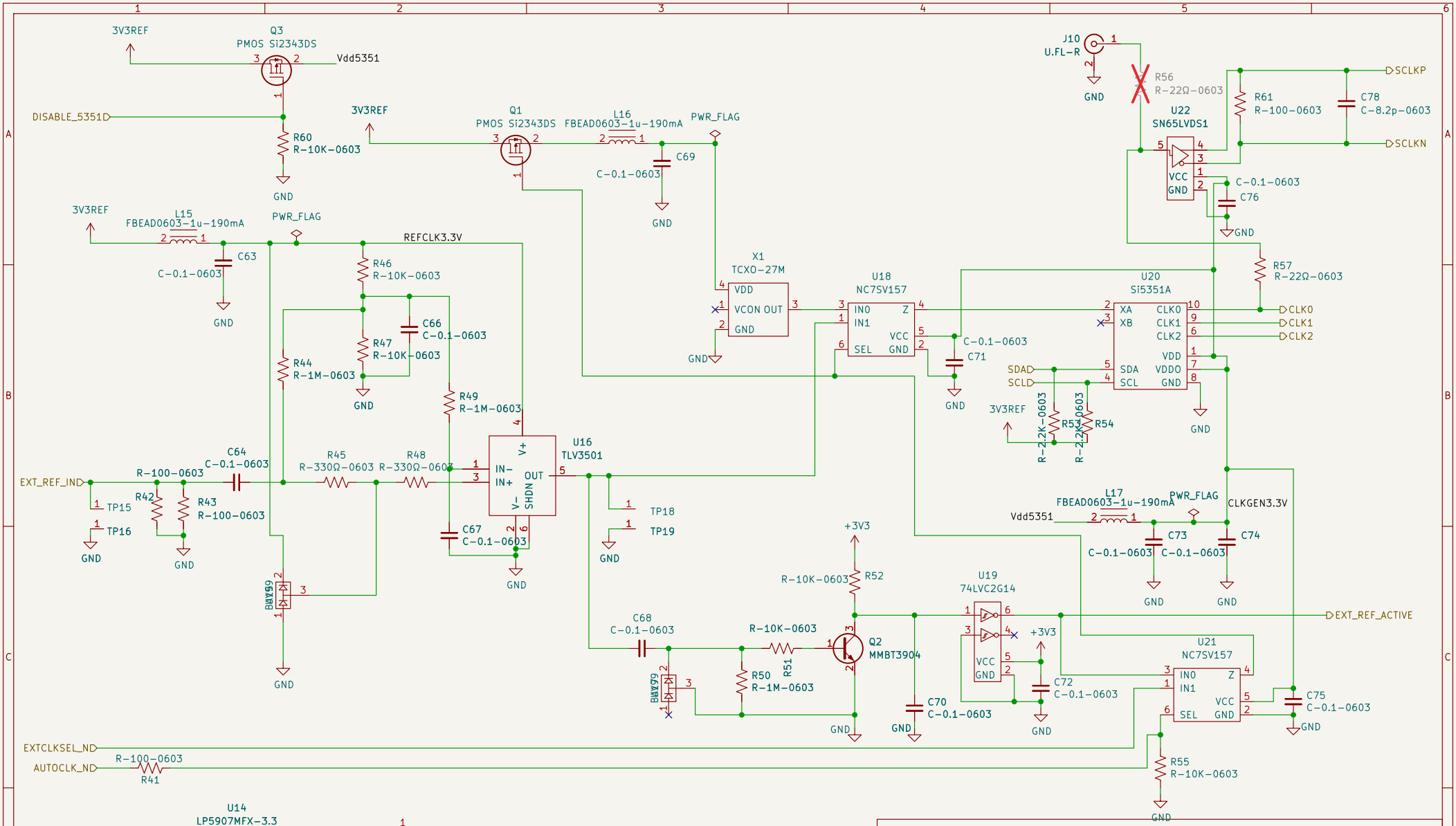

TAPR
TAPRX-888 HF SDR Receiver

Repo: github.com/TAPR/TAPRx888

Designer: Paul Elliott (WB6CXC)	Commit: dev	License: MIT
Size: A4	Date: 2026-07-16	Rev: DEV
Sheet: /Clock/	File: refclk.kicad_sch	Page 3 of 3