REVISIONS				
ZONE	REV	DESCRIPTION	DATE	APPROVED

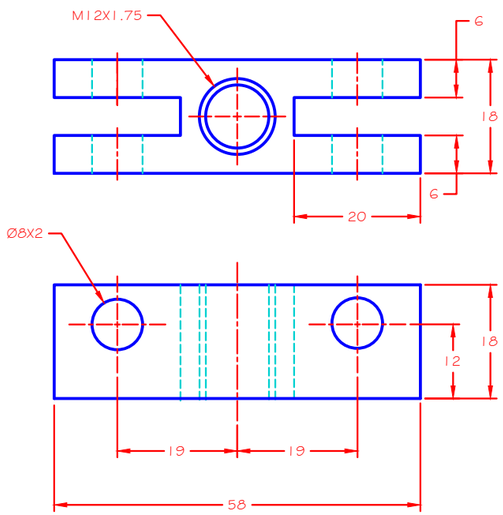

YOKE
1020 STL-1 REQ.

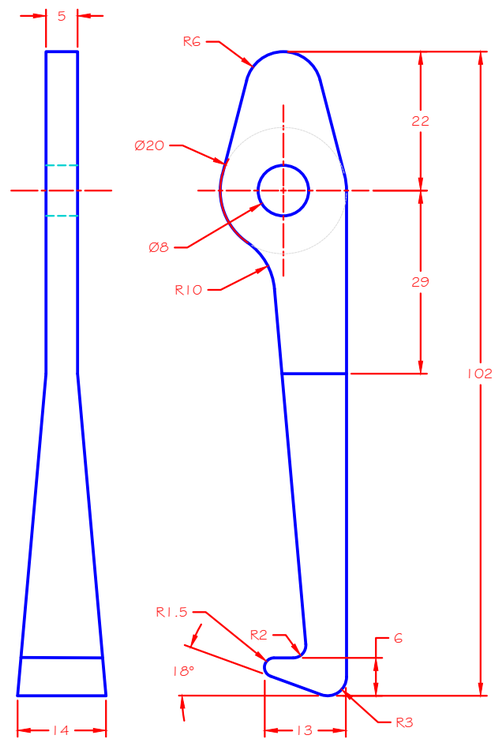

ARM
1020 STL-2 REQ.

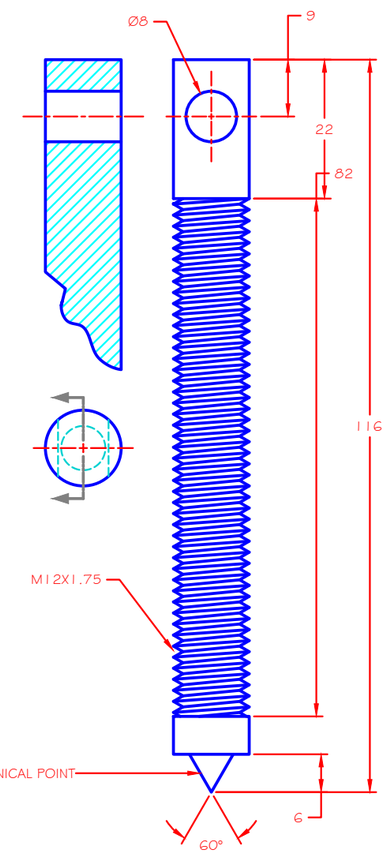

SCREW
1020 STL-1 REQ.

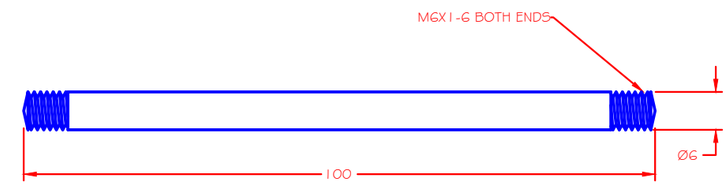

HANDLE
1020 STL-1 REQ.

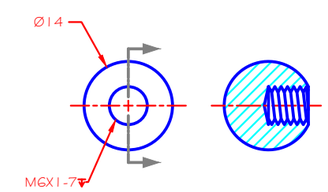

KNOB
1020 STL-2 REQ.

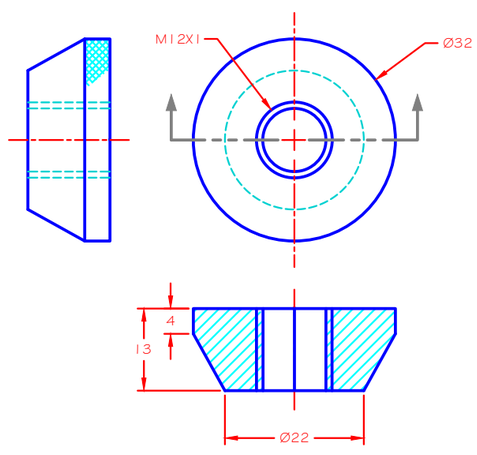

SPREAD NUT
1020 STL-1 REQ.

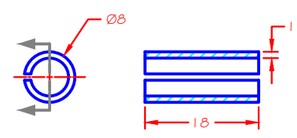

SPRING PIN
SEETL-2 REQ.

B	PORTFOLIO Gear Puller Detailed Parts			
	SIZE	FSCM NO.	DWG NO.	REV
	SCALE 1/2"=1"	Thomas Armiras	SHEET 1 OF 3	