Analog Theremin
4-23-2026

UNIVERSITY *of* WASHINGTON

Circuit Simulation

UNIVERSITY *of* WASHINGTON

Circuit Simulation

- Before you build your circuits, you will need to prove that they work
- You will be able to choose between two simulation platforms
- Given different inputs, you must successfully demonstrate each of the following outputs:
  - Low pitch, low intensity
  - Low pitch, high intensity
  - High pitch, low intensity
  - High pitch, high intensity

Option 1: LTSpice

- Used for circuit analysis
- Can be used for precise parts/equipment, but fewer built-in tools

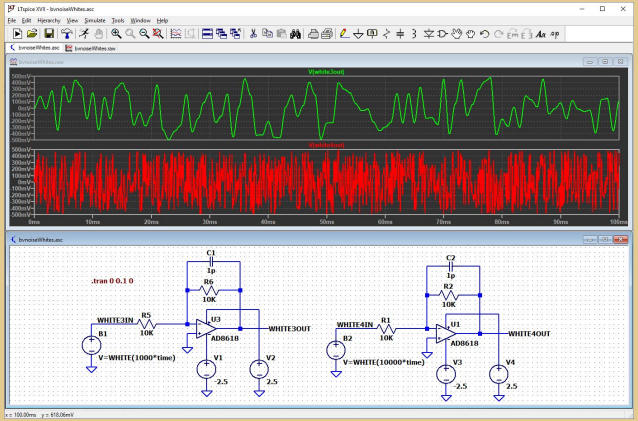

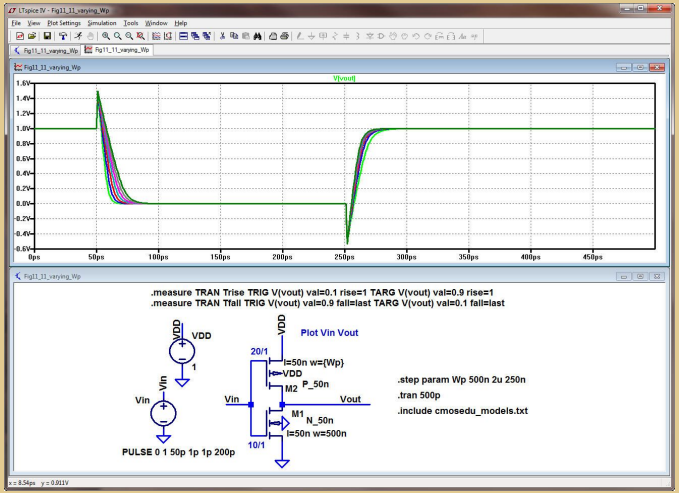

Option 2: Simulink

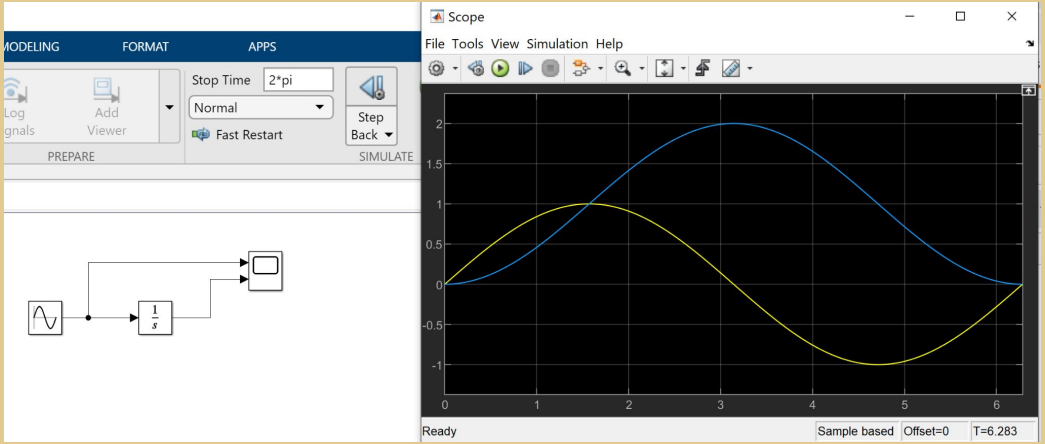

- Used for system design
- Large variety of components but not super specific
- Lots of visual tools to analyze your system behavior

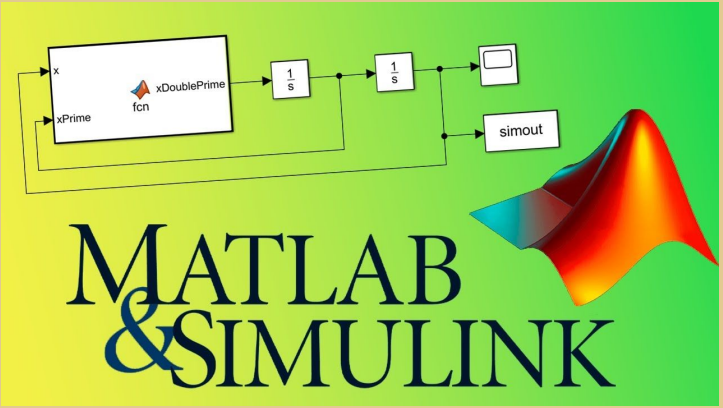

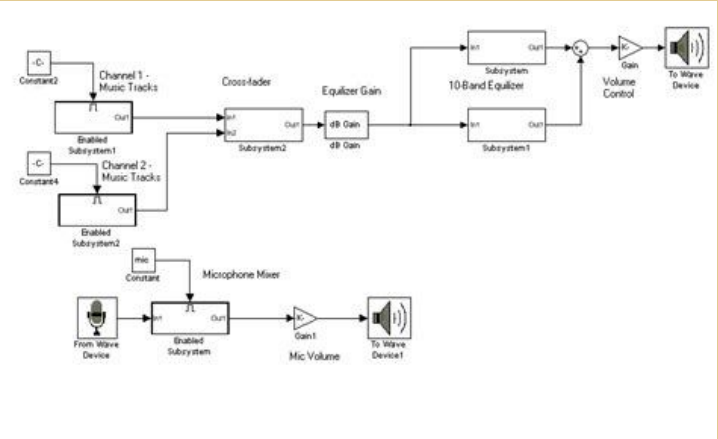

Looking ahead

- Try to finish as much as you can this meeting
- If you don’t finish on time, you have until 4/28/2026, 11:59:59
- Submit your .asc (LTSpice) or .slx (Simulink) to Sam and Nate before the deadline
- If you have questions outside of meeting time, reach out on Discord whenever
- We will begin building your designs on 4/30/2026

Thanks for coming!

UNIVERSITY *of* WASHINGTON