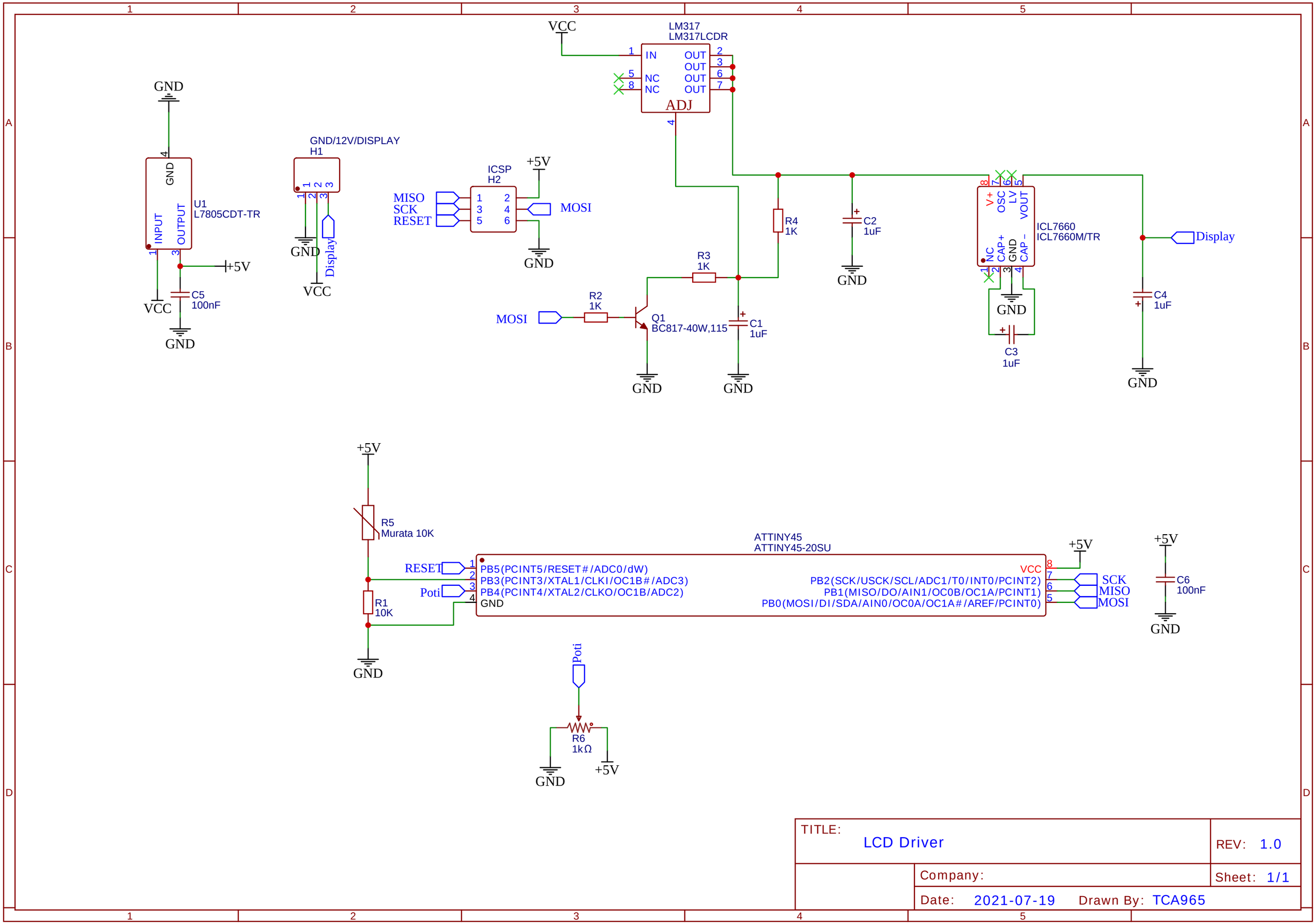

TITLE: LCD Driver

REV: 1.0

Company:

Sheet: 1/1

Date: 2021-07-19

Drawn By: TCA965