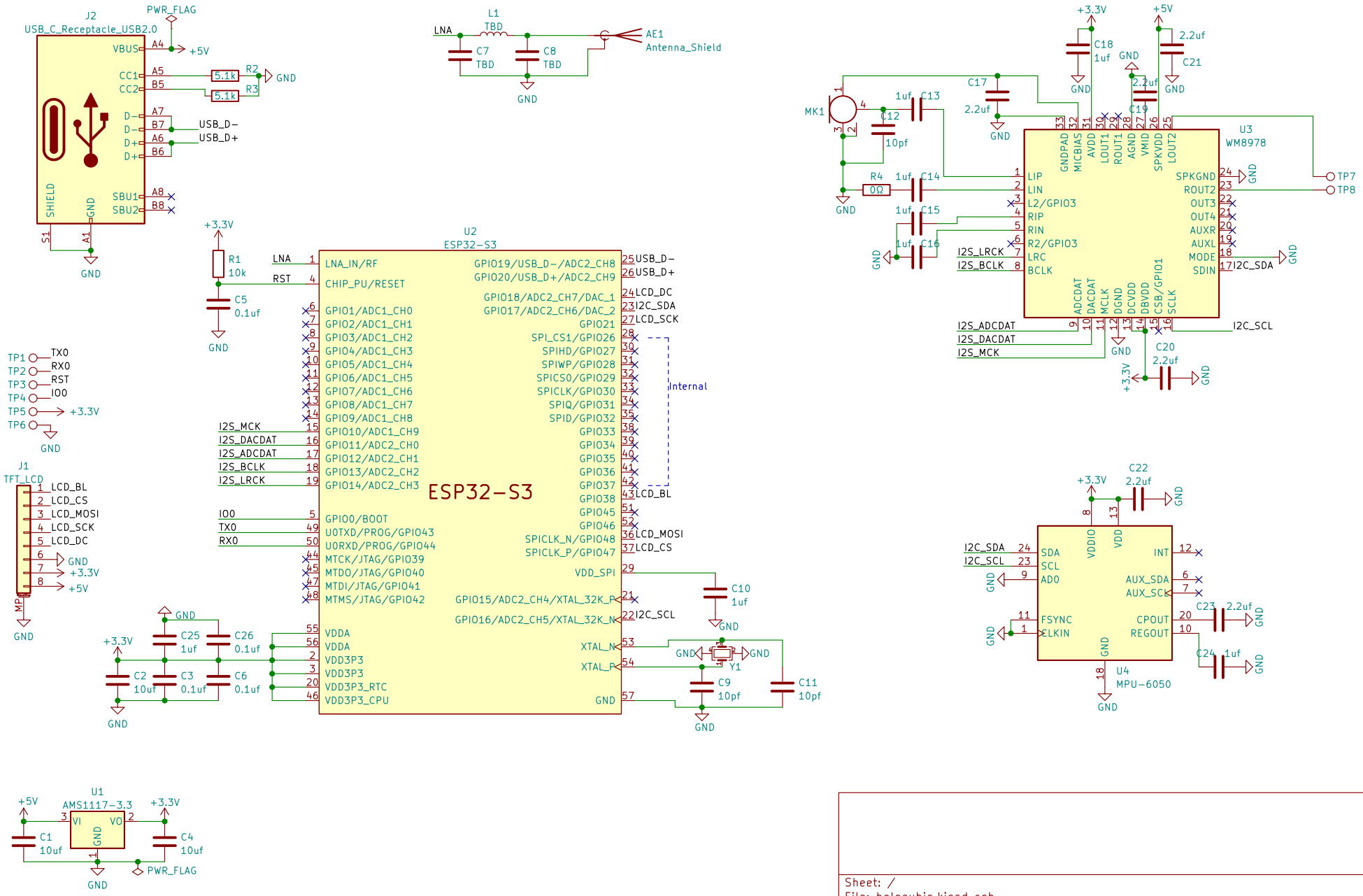

Sheet: /
File: holocubic.kicad_sch

Title: main−board

Size: A4	Date: 2022−05−28	**Rev: V1.0**
KiCad E.D.A. kicad 6.0.4		Id: 1/1