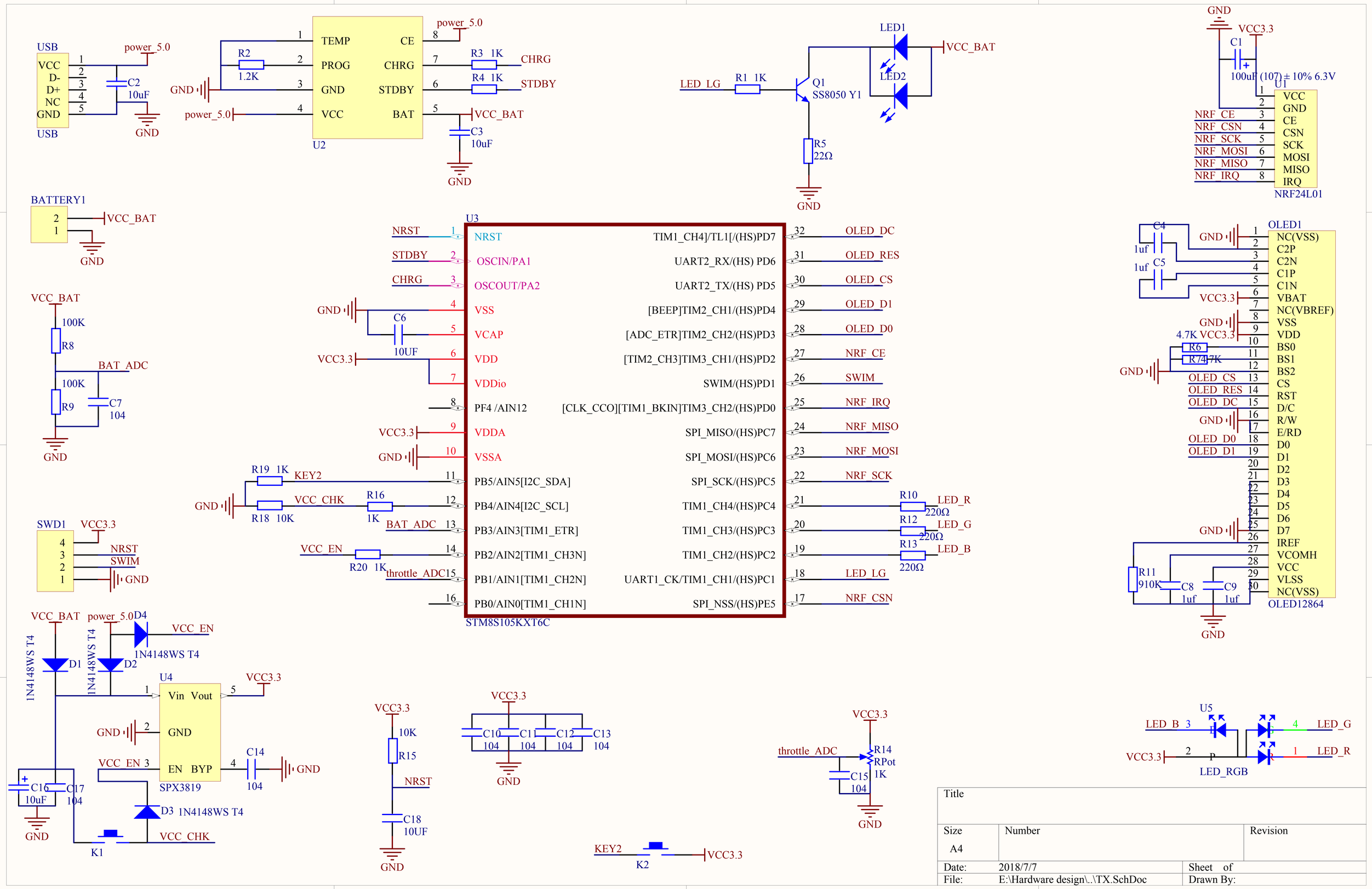

Title		
Size A4	Number	Revision
Date: 2018/7/7		Sheet of
File: E:\Hardware design\..\TX.SchDoc		Drawn By:

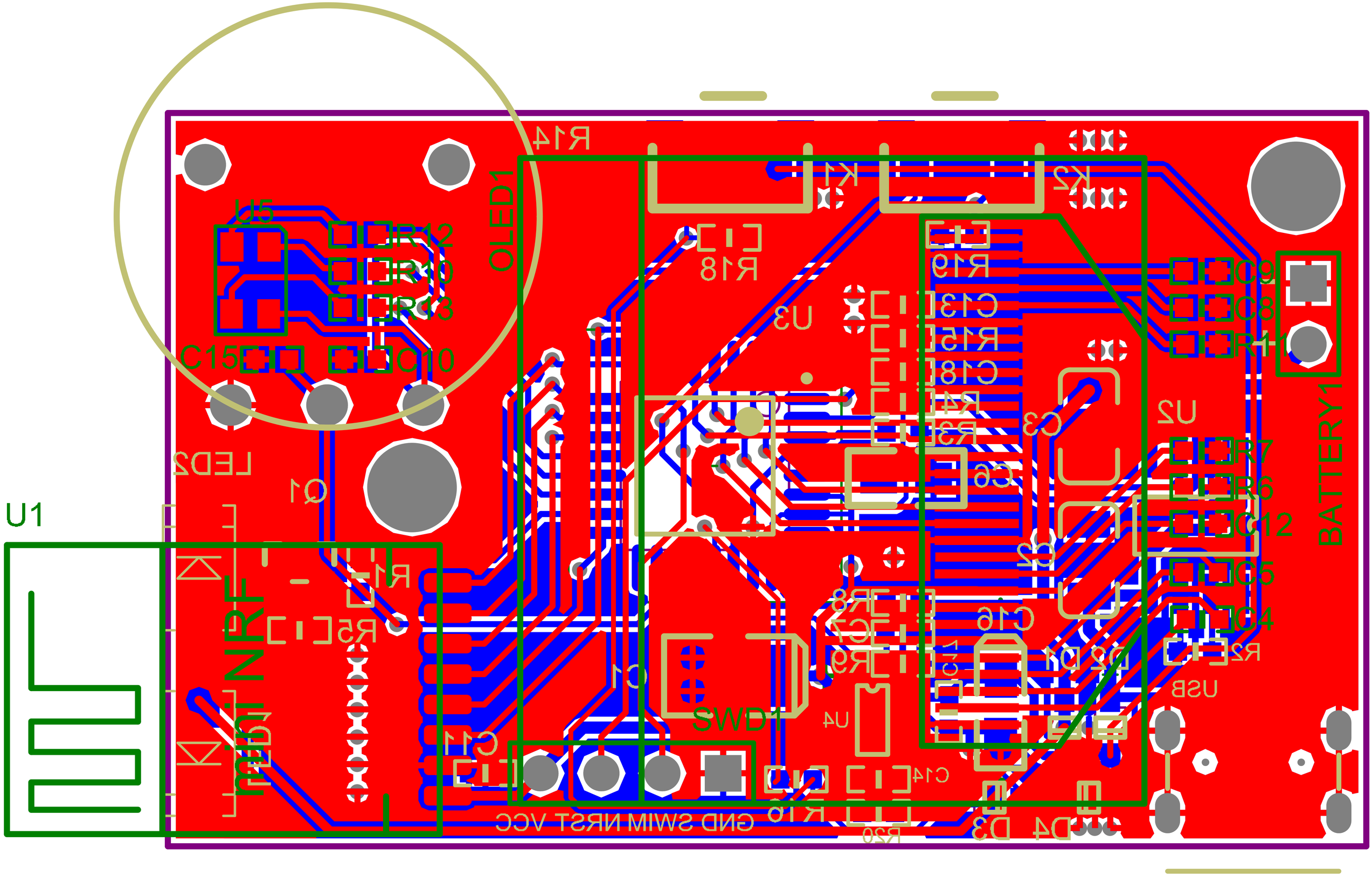
U1
J5
R12
R10
R13
C15
C10
OLED1
R14
K1
K2
R18
U3
R19
C13
R15
C18
R4
R3
C3
C6
U2
R7
R6
C12
C5
C4
R2
USB
BATTERY1
C9
C8
R1
C16
D1
D2
D3
D4
R8
C7
R9
C1
U4
SWD1
C14
R16
R20
GND SWIM NRST VCC
C11
Q1
R5
R1
LED2
NRF
Q1