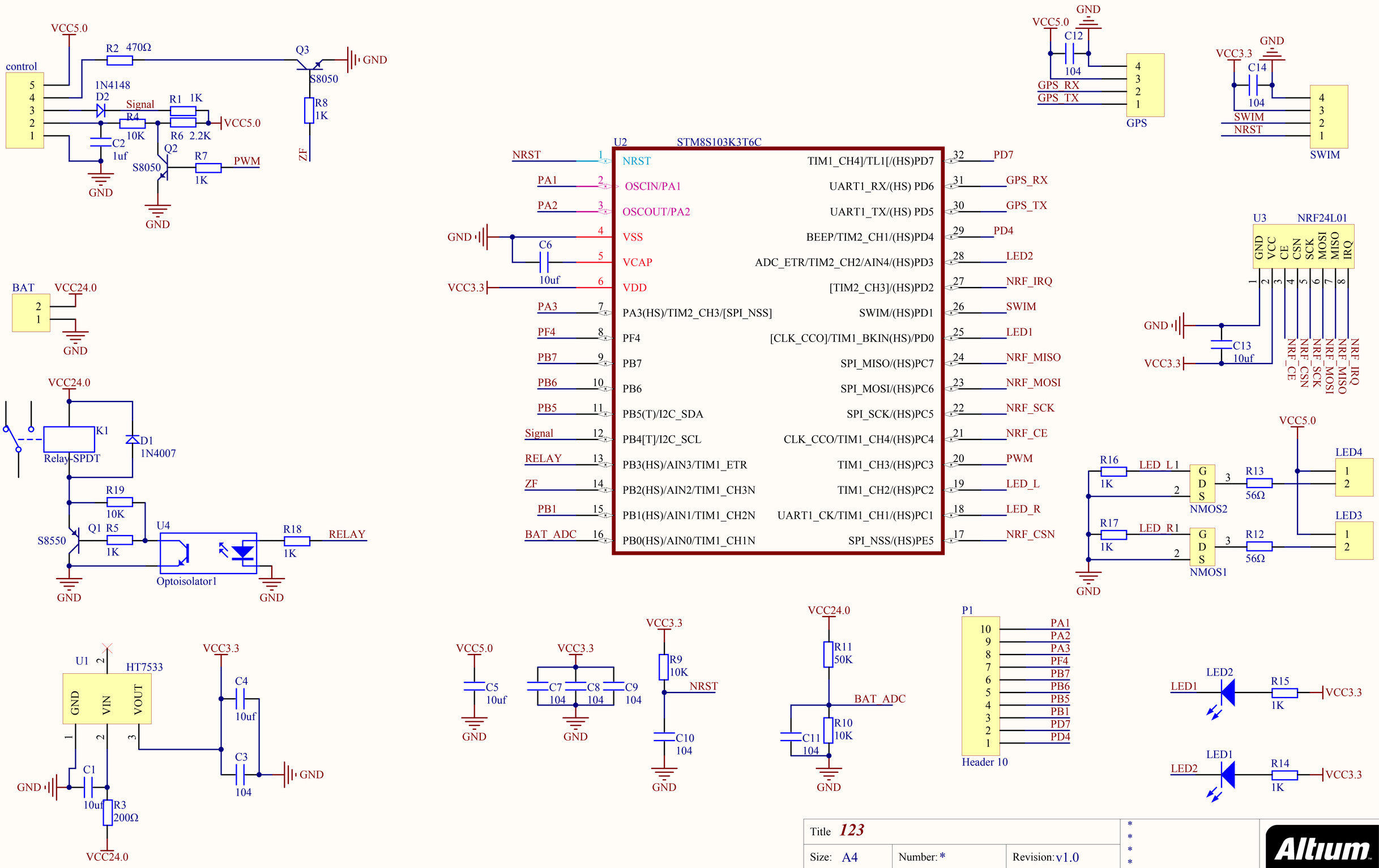

Title *123*			
Size: A4	Number: *	Revision: v1.0	
Date: 2017/9/11	Time: 8:57:37	Sheet 1 of STM8S	
File: E:\Hardware design\My PCB Design\STM8S remote\RX_Project\STM8_remote.SchDoc			

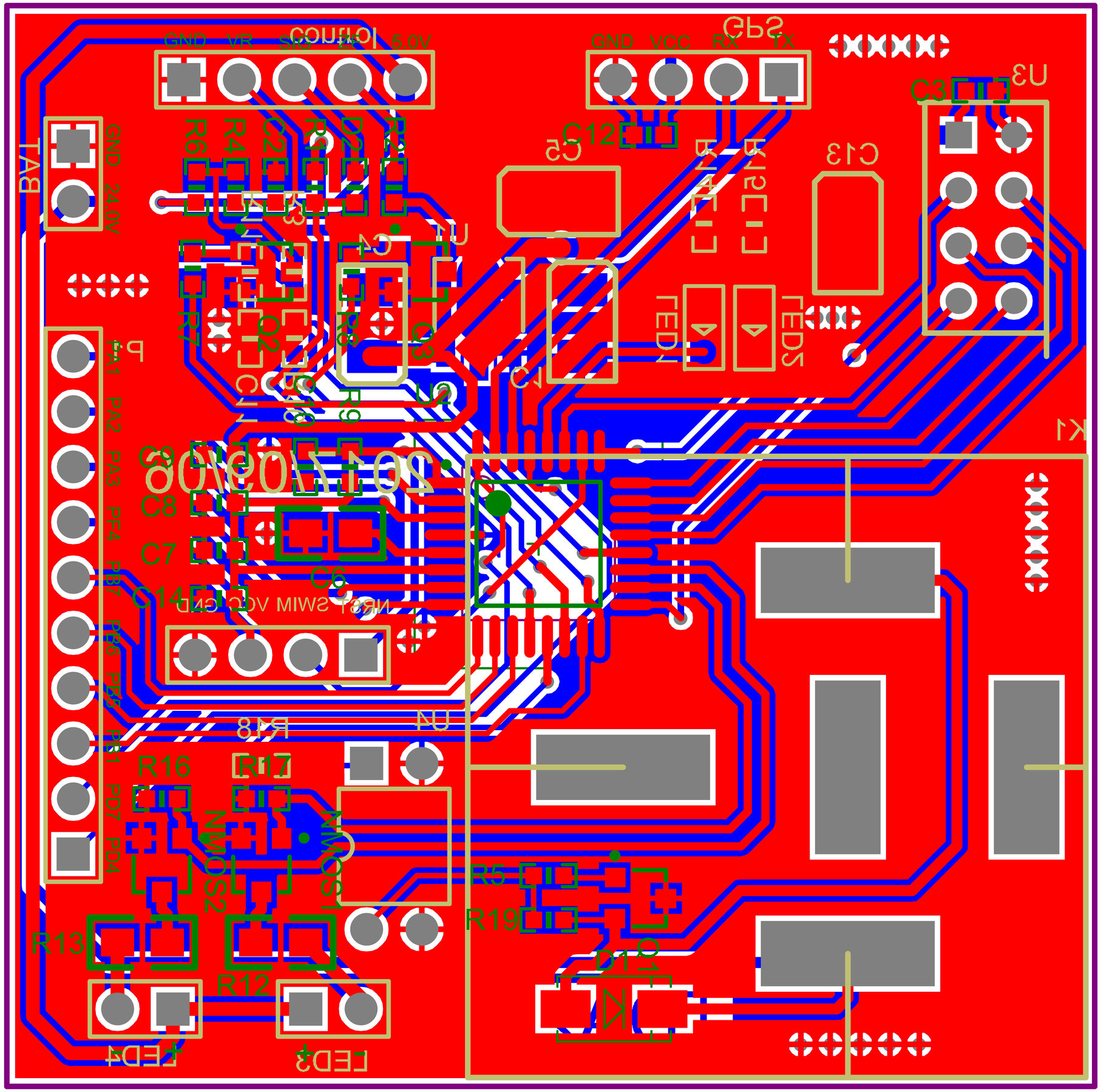
GND
VCC
RX
TX
5.0V
24.0V
PA1
PA2
PA3
PF4
PB7
PB6
PB5
PB1
PD7
PD4
U3
C3
C12
C5
C13
R4
R5
R6
R7
R8
R9
R16
R17
R18
R19
R12
R13
C6
C7
C8
C9
C14
Q2
Q3
U2
U1
U4
K1
LED1
LED2
LED3
LED4
D1
MOS1
MOS2
TAB