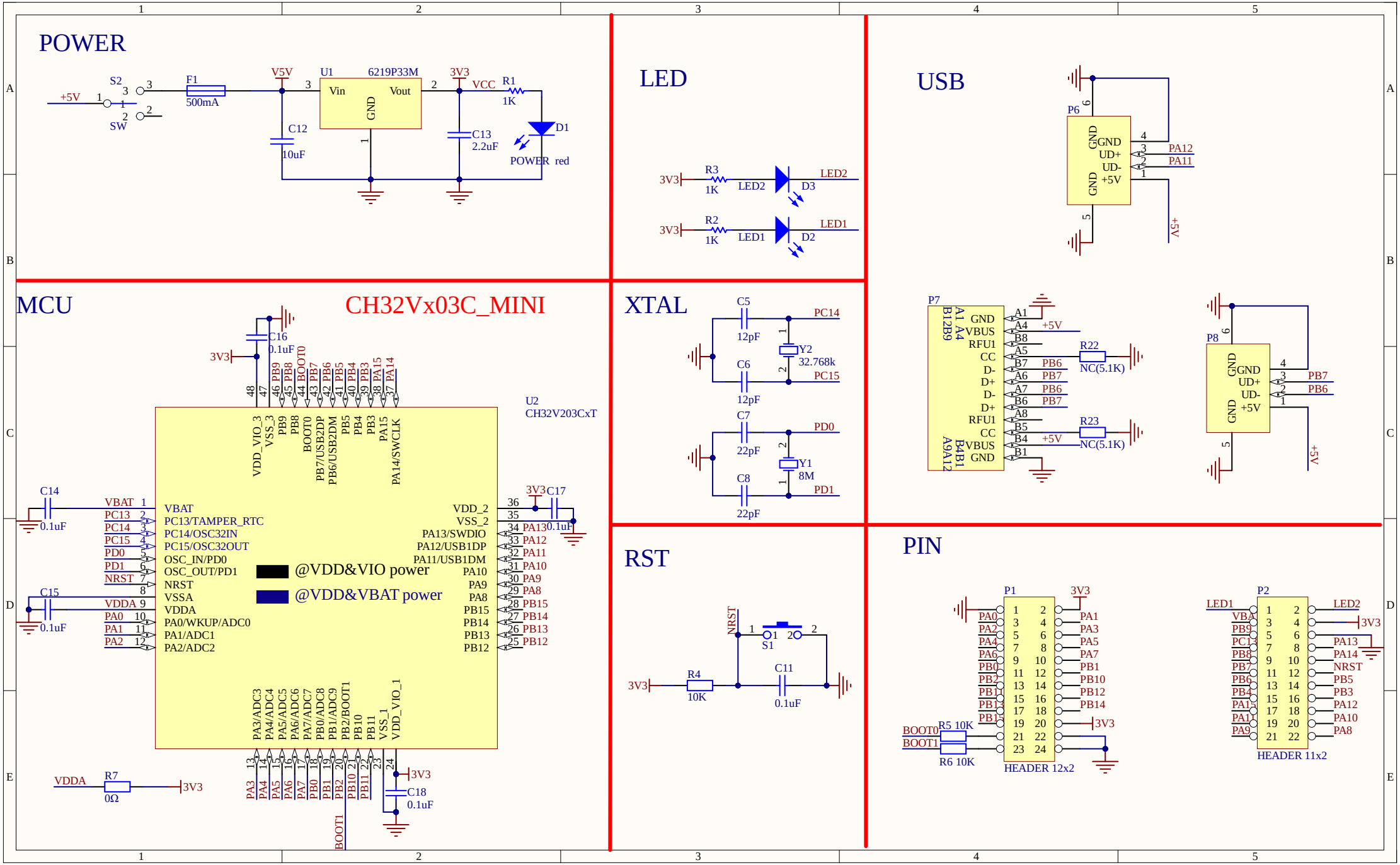
POWER
S2
+5V
SW
F1
500mA
V5V
U1
6219P33M
Vin
Vout
GND
3V3
VCC
R1
1K
C12
10uF
C13
2.2uF
D1
POWER red
LED
3V3
R3
1K
LED2
D3
R2
1K
LED1
D2
USB
P6
GND
UD+
UD-
+5V
PA12
PA11
+5V
P7
A1 A4
B12B9
GND
VBUS
RFU1
CC
D-
D+
RFU1
CC
VBUS
GND
A9A12
B4B1
+5V
R22
NC(5.1K)
PB6
PB7
R23
NC(5.1K)
P8
PB7
PB6
MCU
CH32Vx03C_MINI
U2
CH32V203CxT
C16
0.1uF
3V3
VDD_VIO_3
VSS_3
PB9
PB8
BOOT0
PB7/USB2DP
PB6/USB2DM
PB5
PB4
PB3
PA15
PA14/SWCLK
C14
0.1uF
VBAT
PC13
PC14
PC15
PD0
PD1
NRST
C15
0.1uF
VDDA
PA0
PA1
PA2
VBAT
PC13/TAMPER_RTC
PC14/OSC32IN
PC15/OSC32OUT
OSC_IN/PD0
OSC_OUT/PD1
NRST
VSSA
VDDA
PA0/WKUP/ADC0
PA1/ADC1
PA2/ADC2
@VDD&VIO power
@VDD&VBAT power
VDD_2
VSS_2
PA13/SWDIO
PA12/USB1DP
PA11/USB1DM
PA10
PA9
PA8
PB15
PB14
PB13
PB12
3V3
C17
0.1uF
PA13
PA12
PA11
PA10
PA9
PA8
PB15
PB14
PB13
PB12
PA3/ADC3
PA4/ADC4
PA5/ADC5
PA6/ADC6
PA7/ADC7
PB0/ADC8
PB1/ADC9
PB2/BOOT1
PB10
PB11
VSS_1
VDD_VIO_1
VDDA
R7
0Ω
3V3
BOOT1
3V3
C18
0.1uF
XTAL
C5
12pF
PC14
Y2
32.768k
C6
12pF
PC15
C7
22pF
PD0
Y1
8M
C8
22pF
PD1
RST
NRST
S1
3V3
R4
10K
C11
0.1uF
PIN
P1
3V3
PA0
PA2
PA4
PA6
PB0
PB2
PB11
PB13
PB15
PA1
PA3
PA5
PA7
PB1
PB10
PB12
PB14
3V3
BOOT0
BOOT1
R5 10K
R6 10K
HEADER 12x2
P2
LED1
VBA
PB9
PC13
PB8
PB7
PB6
PB4
PA15
PA11
PA9
LED2
3V3
PA13
PA14
NRST
PB5
PB3
PA12
PA10
PA8
HEADER 11x2