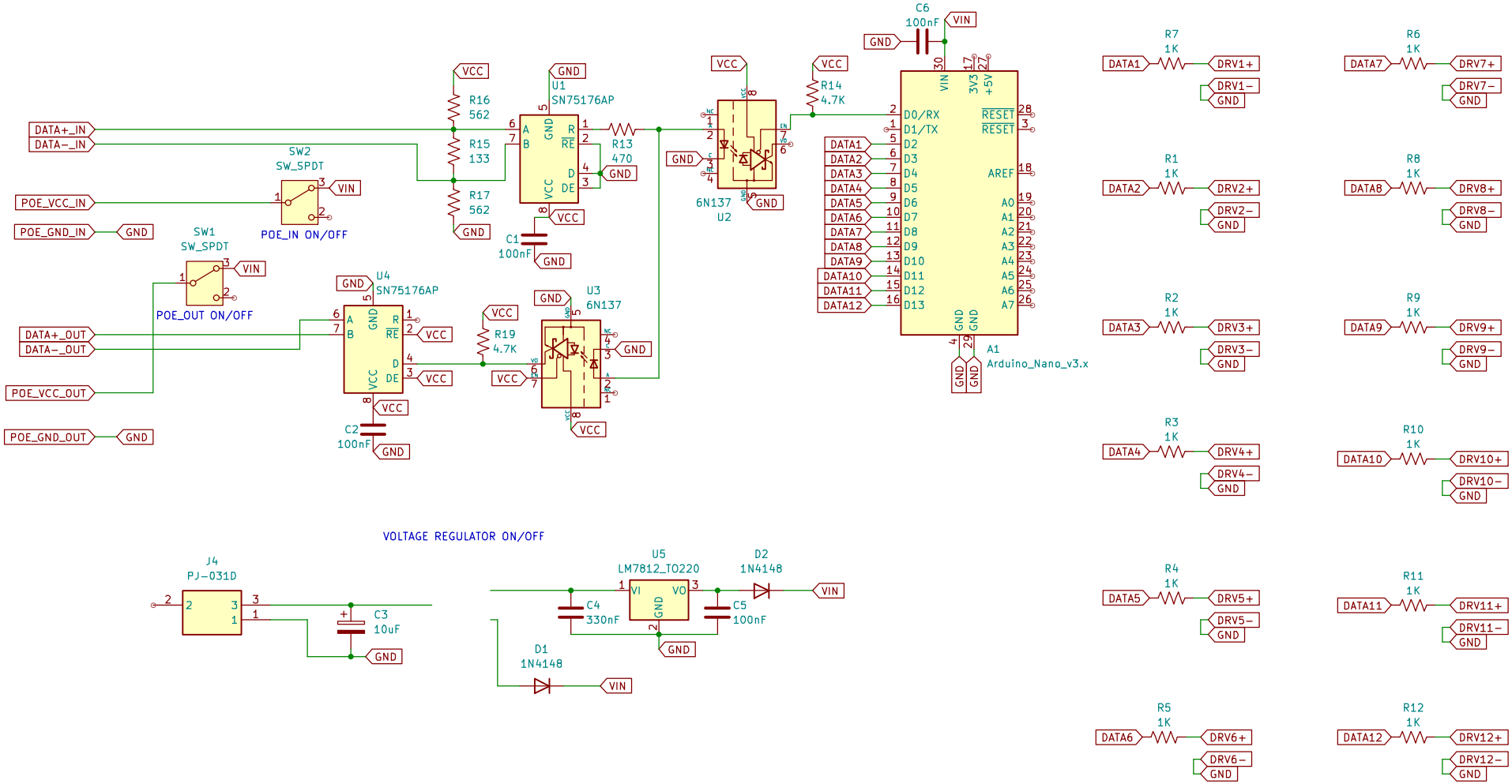
DATA+_IN
DATA-_IN
POE_VCC_IN
POE_GND_IN
SW2
SW_SPDT
POE_IN ON/OFF
SW1
SW_SPDT
POE_OUT ON/OFF
DATA+_OUT
DATA-_OUT
POE_VCC_OUT
POE_GND_OUT
R16
562
R15
133
R17
562
U1
SN75176AP
R13
470
C1
100nF
U4
SN75176AP
C2
100nF
R19
4.7K
U3
6N137
6N137
U2
R14
4.7K
C6
100nF
A1
Arduino_Nano_v3.x
DATA1
DATA2
DATA3
DATA4
DATA5
DATA6
DATA7
DATA8
DATA9
DATA10
DATA11
DATA12
DRV1+
DRV1-
DRV2+
DRV2-
DRV3+
DRV3-
DRV4+
DRV4-
DRV5+
DRV5-
DRV6+
DRV6-
DRV7+
DRV7-
DRV8+
DRV8-
DRV9+
DRV9-
DRV10+
DRV10-
DRV11+
DRV11-
DRV12+
DRV12-
R7
R6
R1
R8
R2
R9
R3
R10
R4
R11
R5
R12
1K
VOLTAGE REGULATOR ON/OFF
J4
PJ-031D
C3
10uF
U5
LM7812_TO220
C4
330nF
C5
100nF
D2
1N4148
D1
1N4148
VIN
VCC
GND