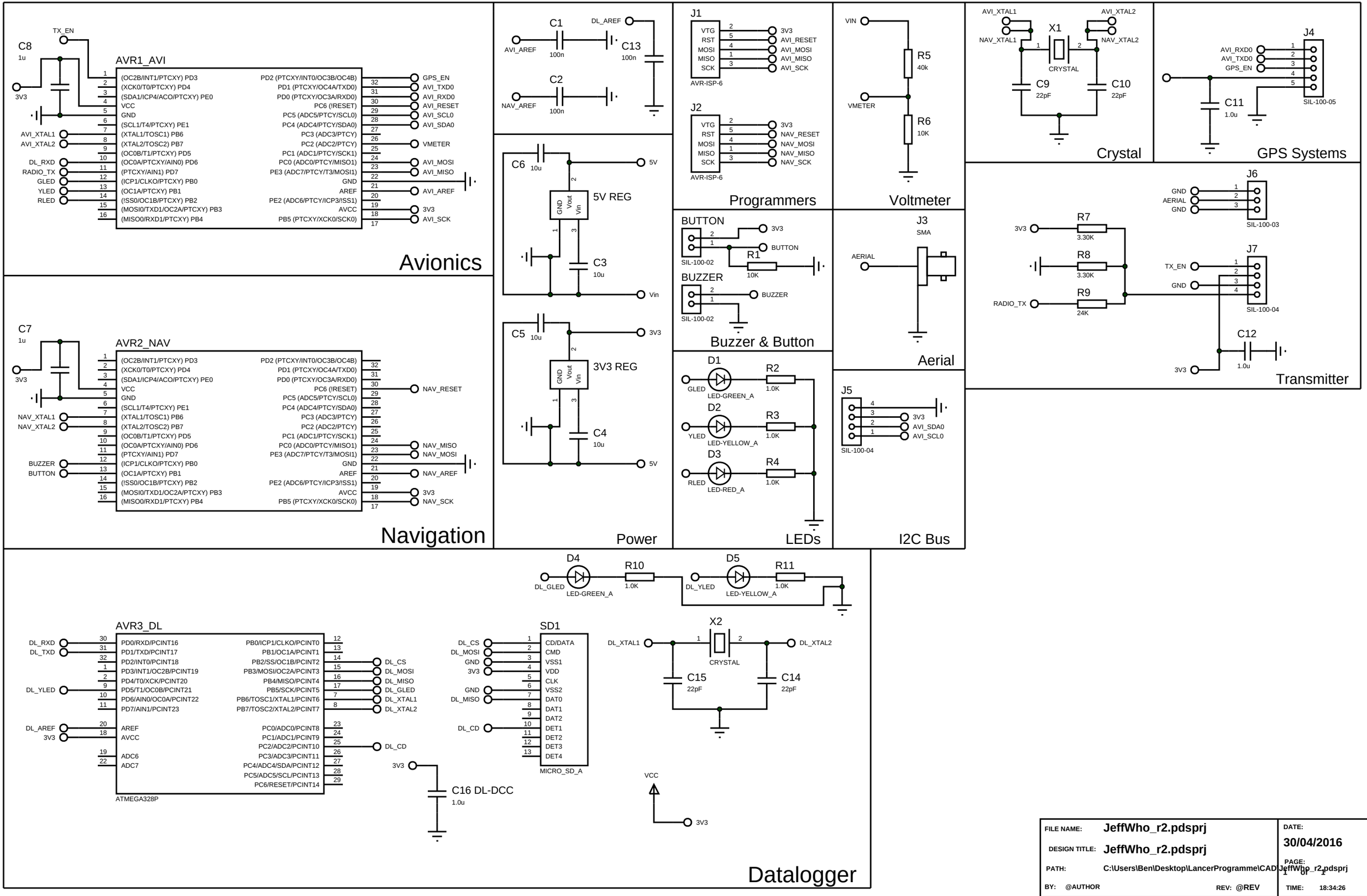

FILE NAME: JeffWho_r2.pdsprj	DATE: 30/04/2016
DESIGN TITLE: JeffWho_r2.pdsprj	PAGE: 1 of 1
PATH: C:\Users\Ben\Desktop\LancerProgramme\CAD\JeffWho_r2.pdsprj	
BY: @AUTHOR REV: @REV	TIME: 18:34:26