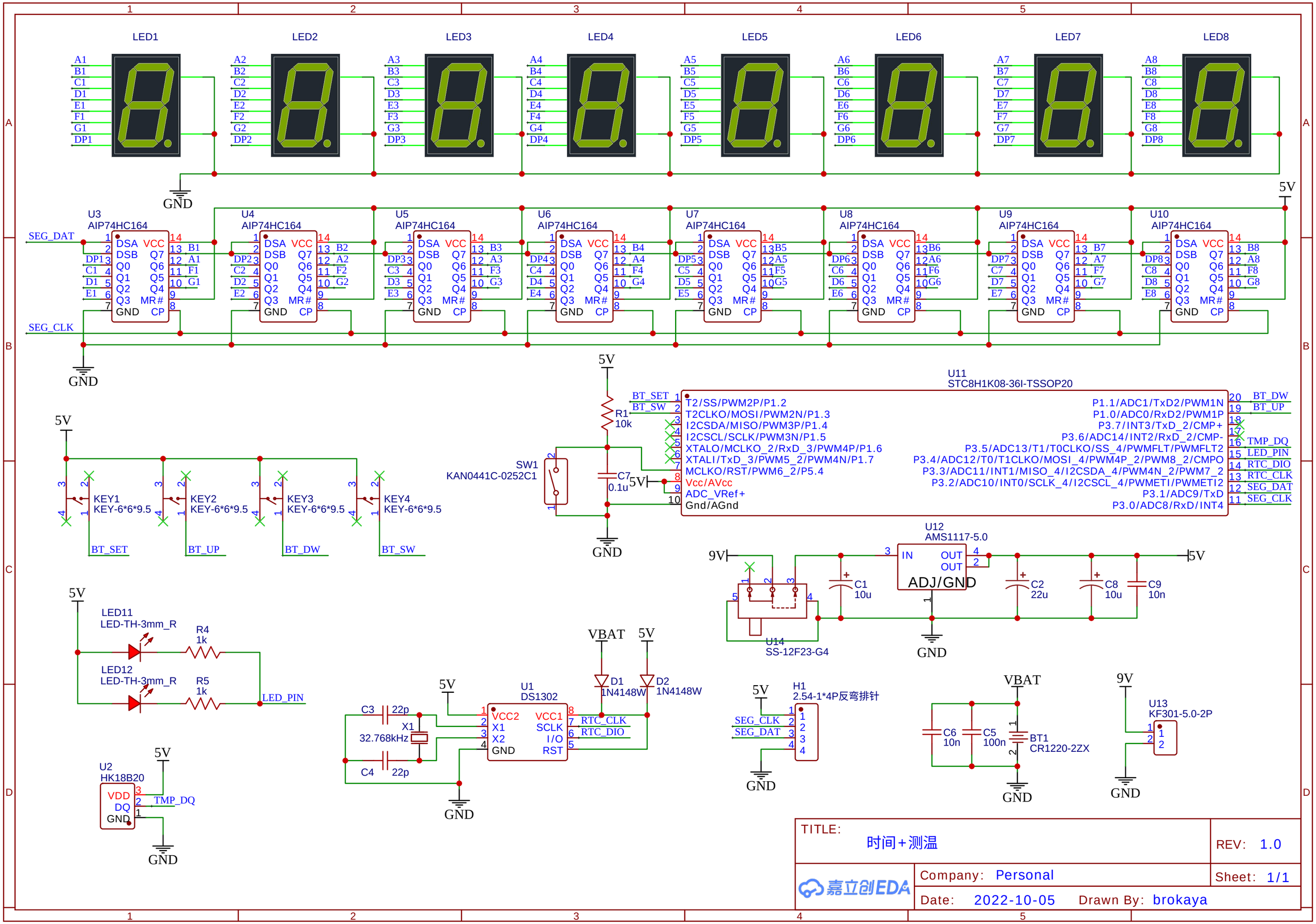

TITLE: 时间+测温	REV: 1.0
Company: Personal	Sheet: 1/1
Date: 2022-10-05 Drawn By: brokaya	

嘉立创EDA