TYPE-C接口输入

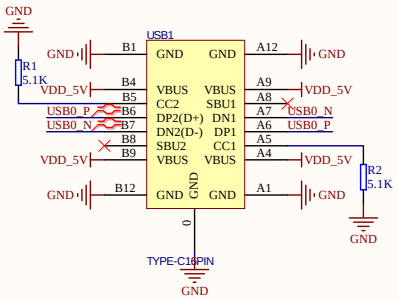

USB2.0_ESD保护

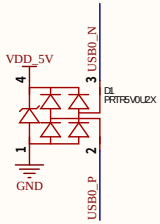

Title		
Size A3	Number	Revision
Date: 2025/5/28	Sheet of	
File: E:\K230\0329\04 Power USB-C.SchDoc	Drawn By:	

0.8V电源

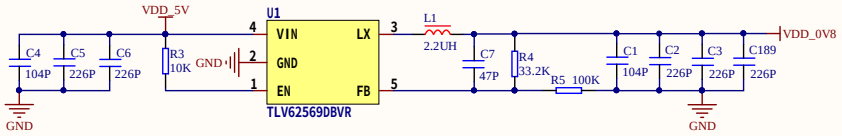

1.1V电源

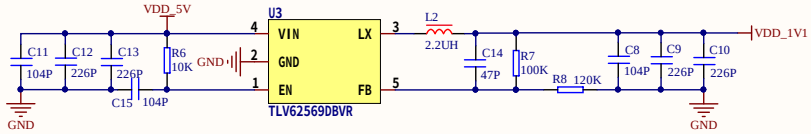

3.3V电源

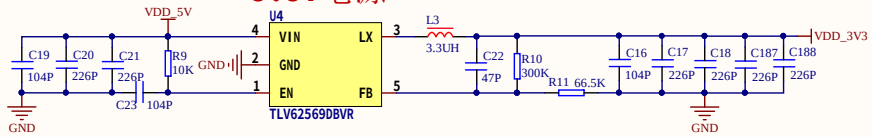

1.8V电源

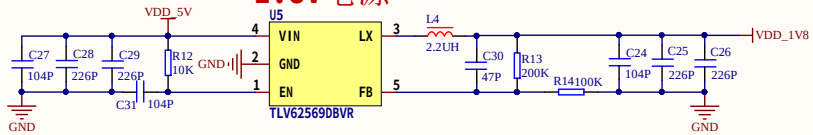

Title		
Size A3	Number	Revision
Date: 2025/5/28		Sheet of
File: E:\K230\0329\05 Power DCDC.SchDoc		Drawn By:

K230供电

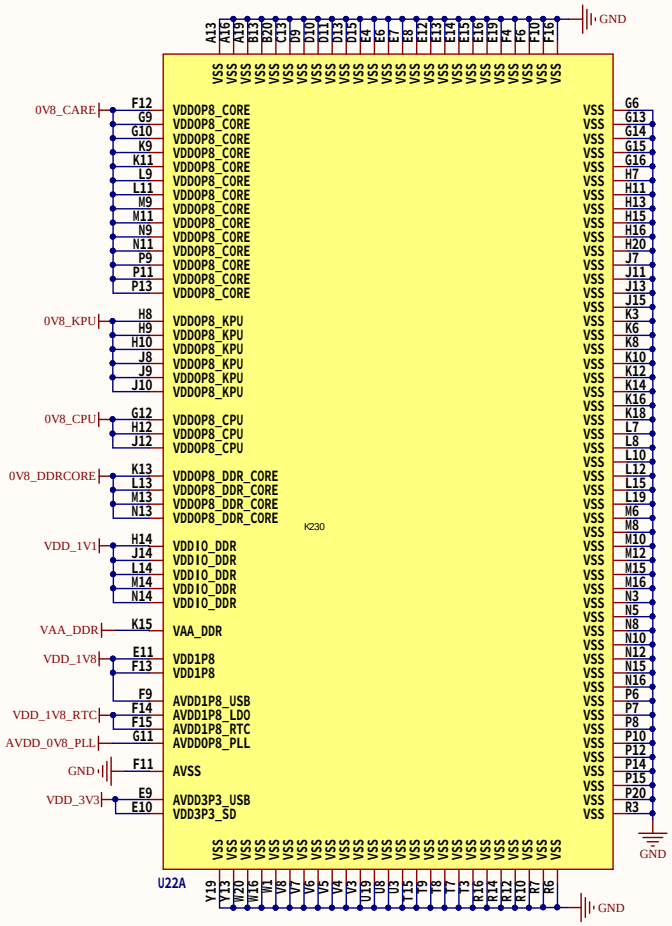

旁路电容

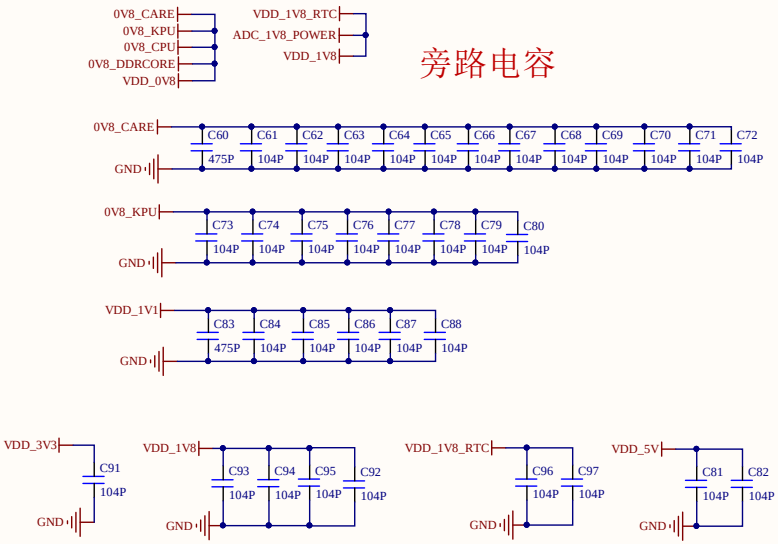

LC滤波

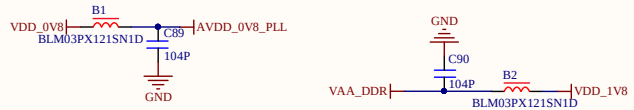

Title		
Size A3	Number	Revision
Date: 2025/5/28	Sheet of	
File: E:\K230\0329\06 K230 POWER.SchDoc	Drawn By:	

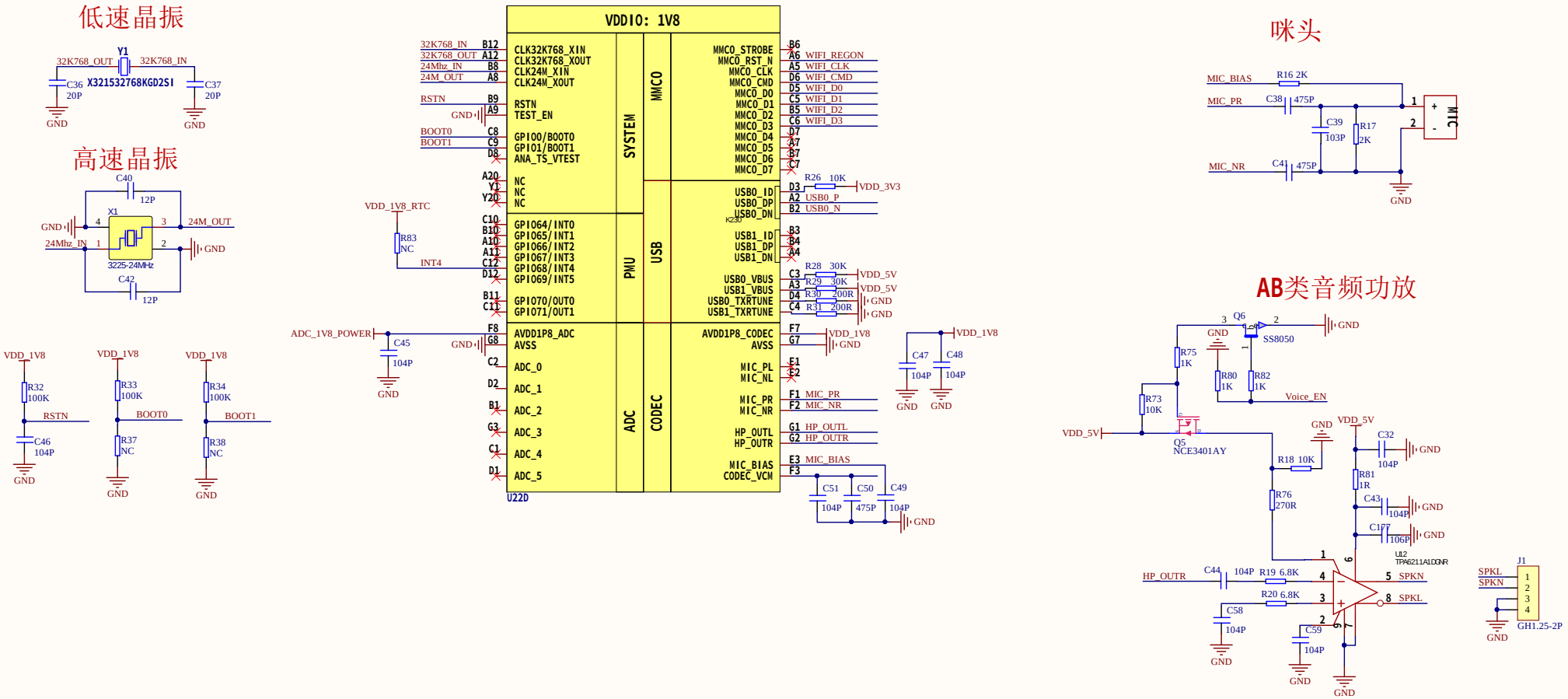

Title		
Size A3	Number	Revision
Date: 2025/5/28		Sheet of
File: E:\K230\0329\07 K230 BOOT.SchDoc		Drawn By:

K230-CSI接口

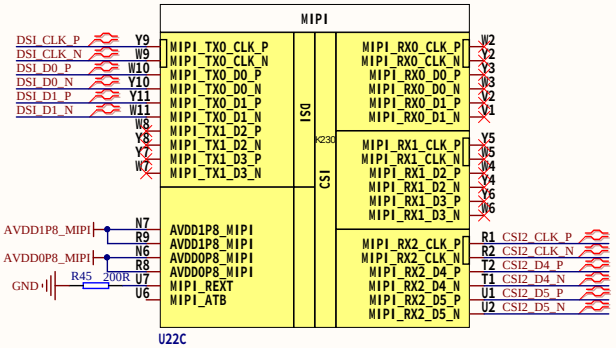

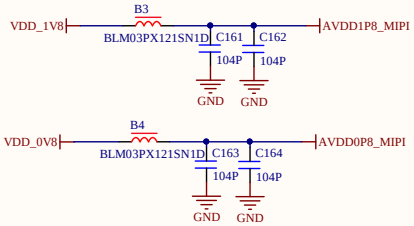

GC2093摄像头接口

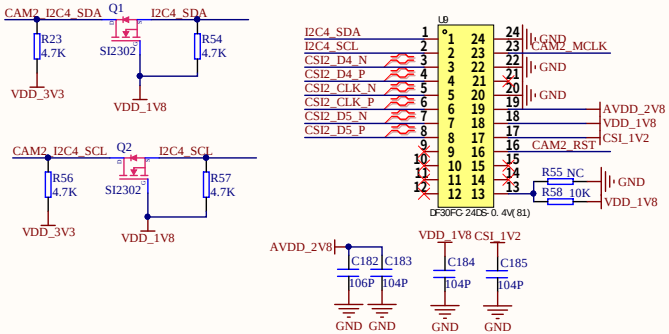

GC2093摄像头供电

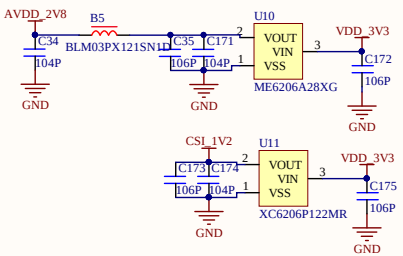

Title		
Size A3	Number	Revision
Date: 2025/5/28		Sheet of
File: E:\K230\0329\08 K230 CSI.SchDoc		Drawn By:

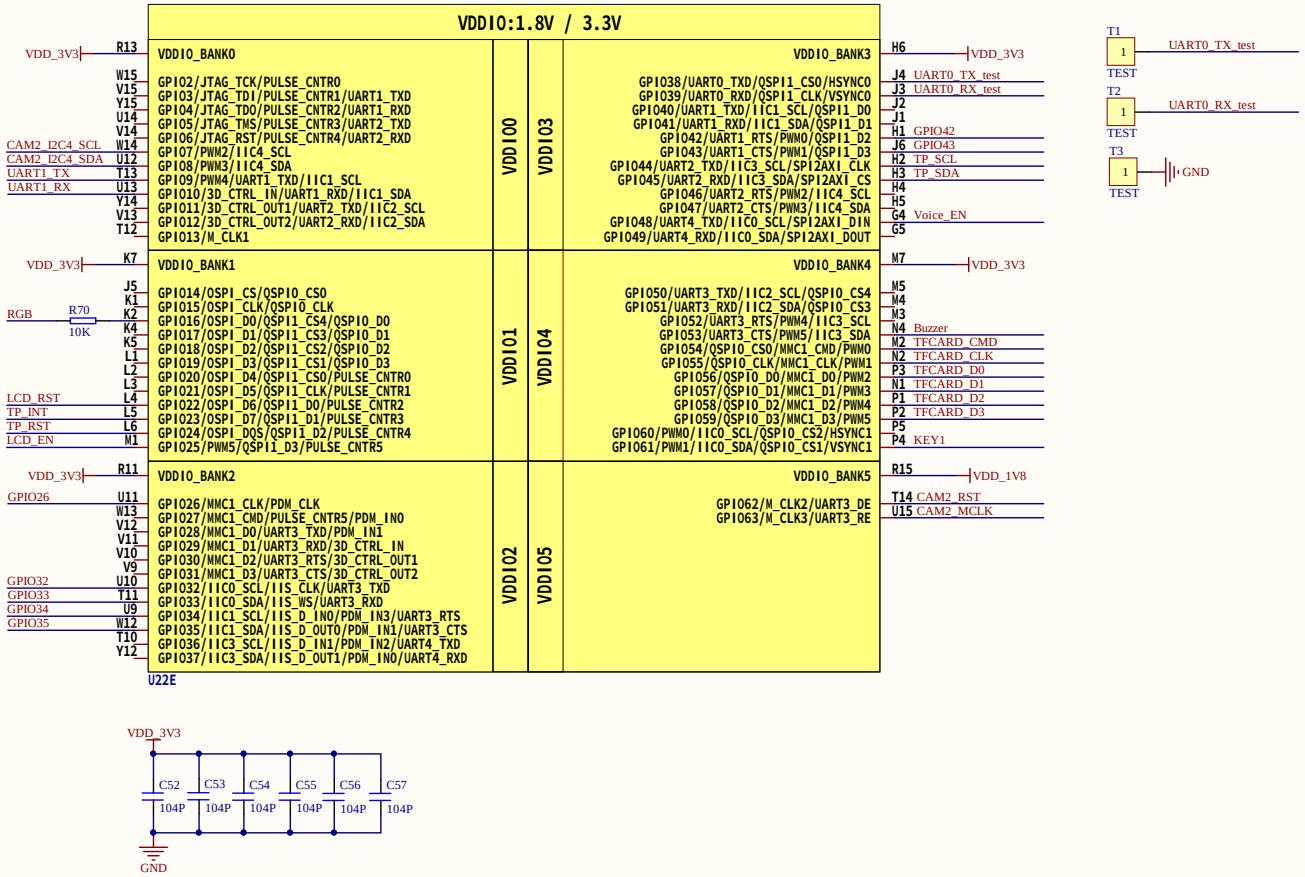

Title		
Size A3	Number	Revision
Date: 2025/5/28		Sheet of
File: E:\K230\0329\09 K230 GPIO.SchDoc		Drawn By:

K230-DDR4接口

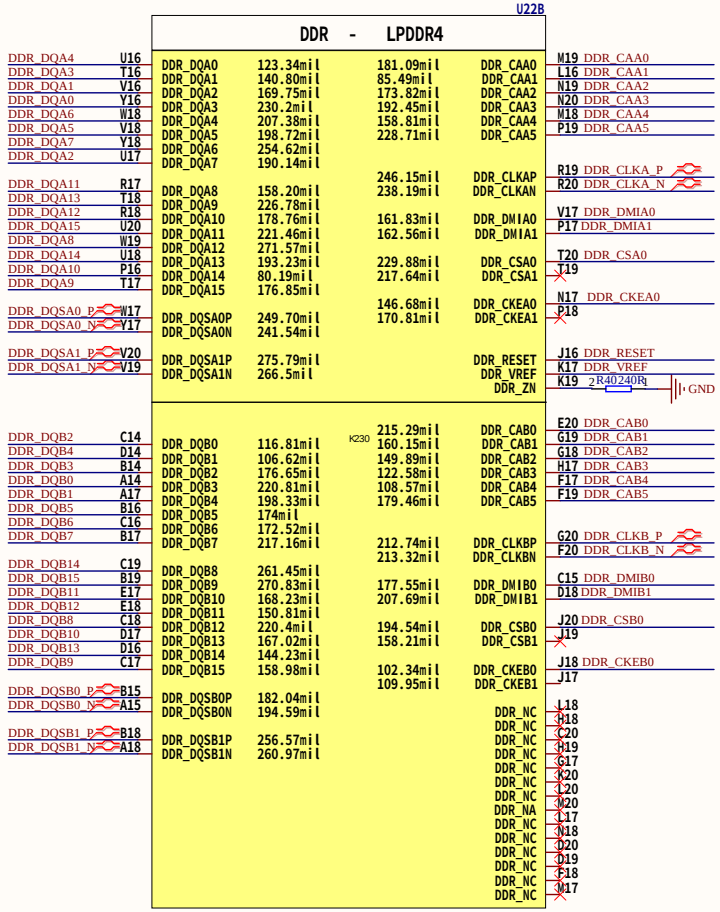

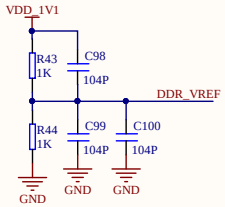

DDR4内存

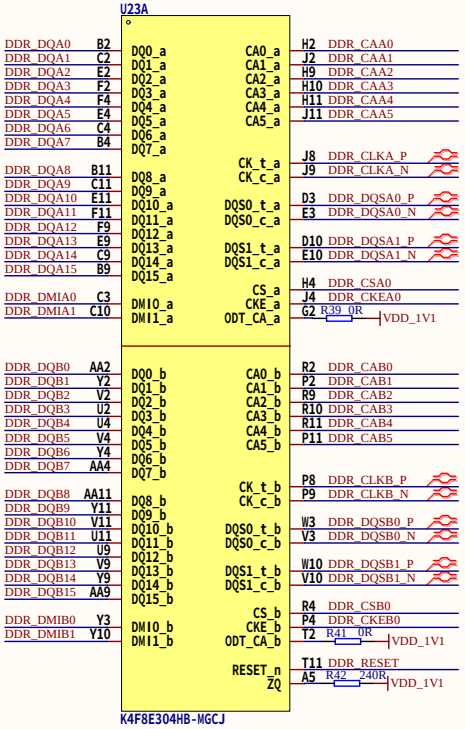

Title		
Size A3	Number	Revision
Date: 2025/5/28	Sheet of	
File: E:\K230\0329\10 K230 DDR4.SchDoc	Drawn By:	

DDR4内存供电

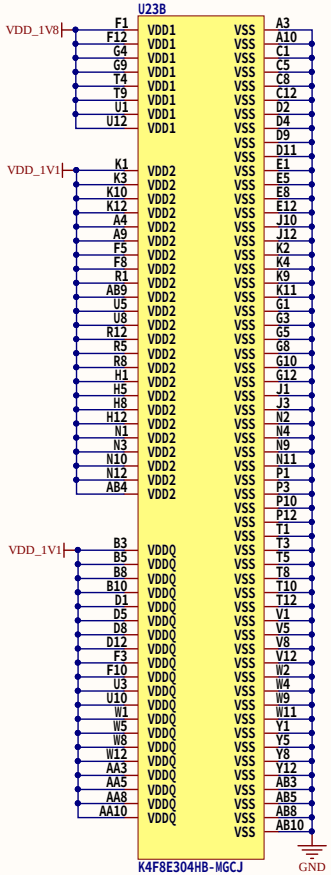

旁路电容

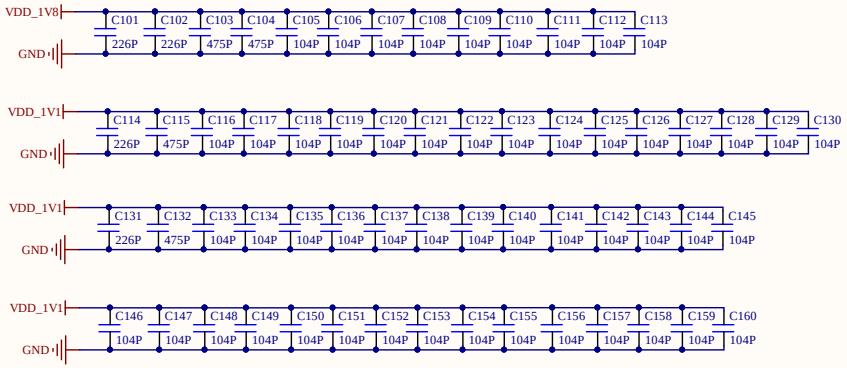

Title		
Size A3	Number	Revision
Date: 2025/5/28	Sheet of	
File: E:\K230\0329\11 DDR4 POWER.SchDoc	Drawn By:	

WIFI模块

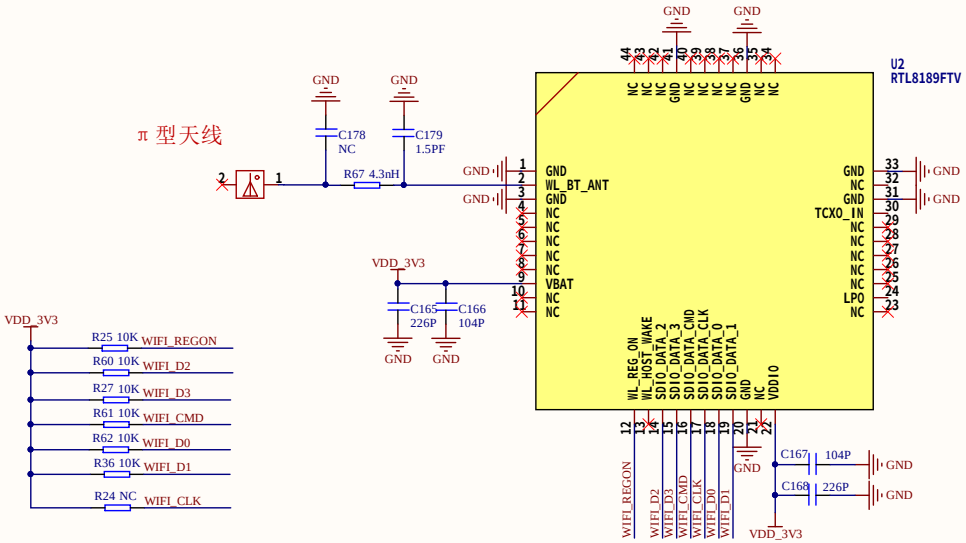

Title		
Size A3	Number	Revision
Date: 2025/5/28		Sheet of
File: E:\K230\0329\12 WIFI.SchDoc		Drawn By:

TF卡槽

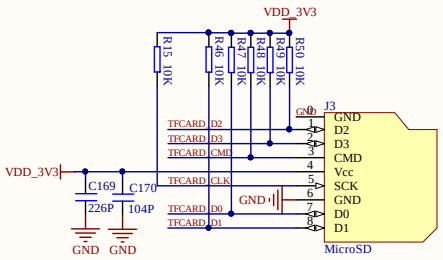

显示屏

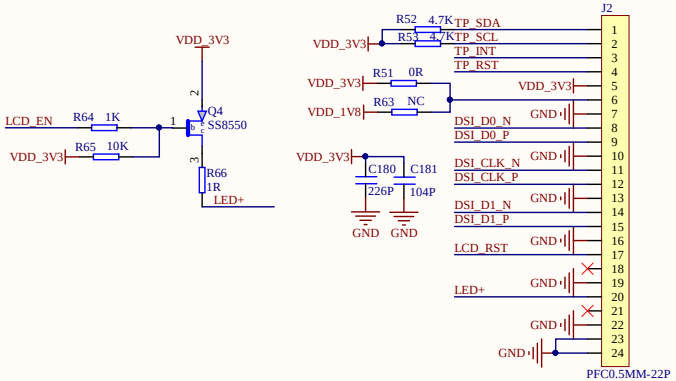

Title		
Size A3	Number	Revision
Date: 2025/5/28		Sheet of
File: E:\K230\0329\13 CSI SD.SchDoc		Drawn By:

按键

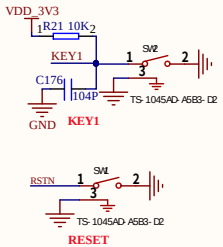

LED指示灯

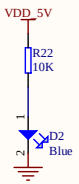

外部串口通信接口

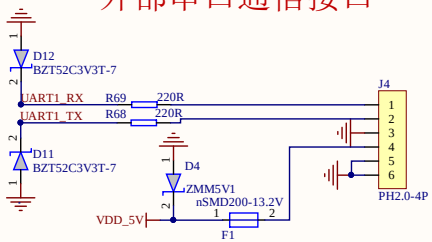

RGB灯

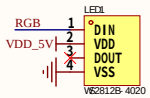

蜂鸣器

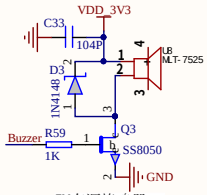

5V有源蜂鸣器
(高低电平控制)

扩展板IO口保护

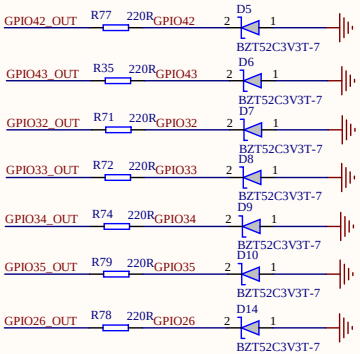

扩展IO口

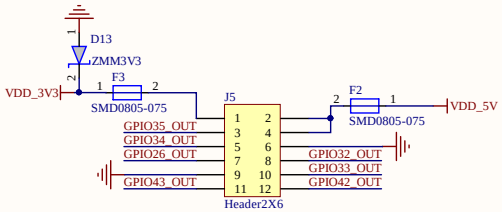

贴片螺母

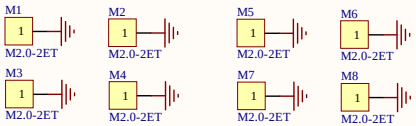

风扇接口

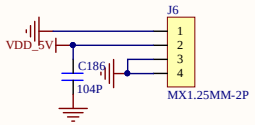

Title		
Size A3	Number	Revision
Date: 2025/5/28		Sheet of
File: E:\K230\0329\K230_v1.0.SchDoc		Drawn By: