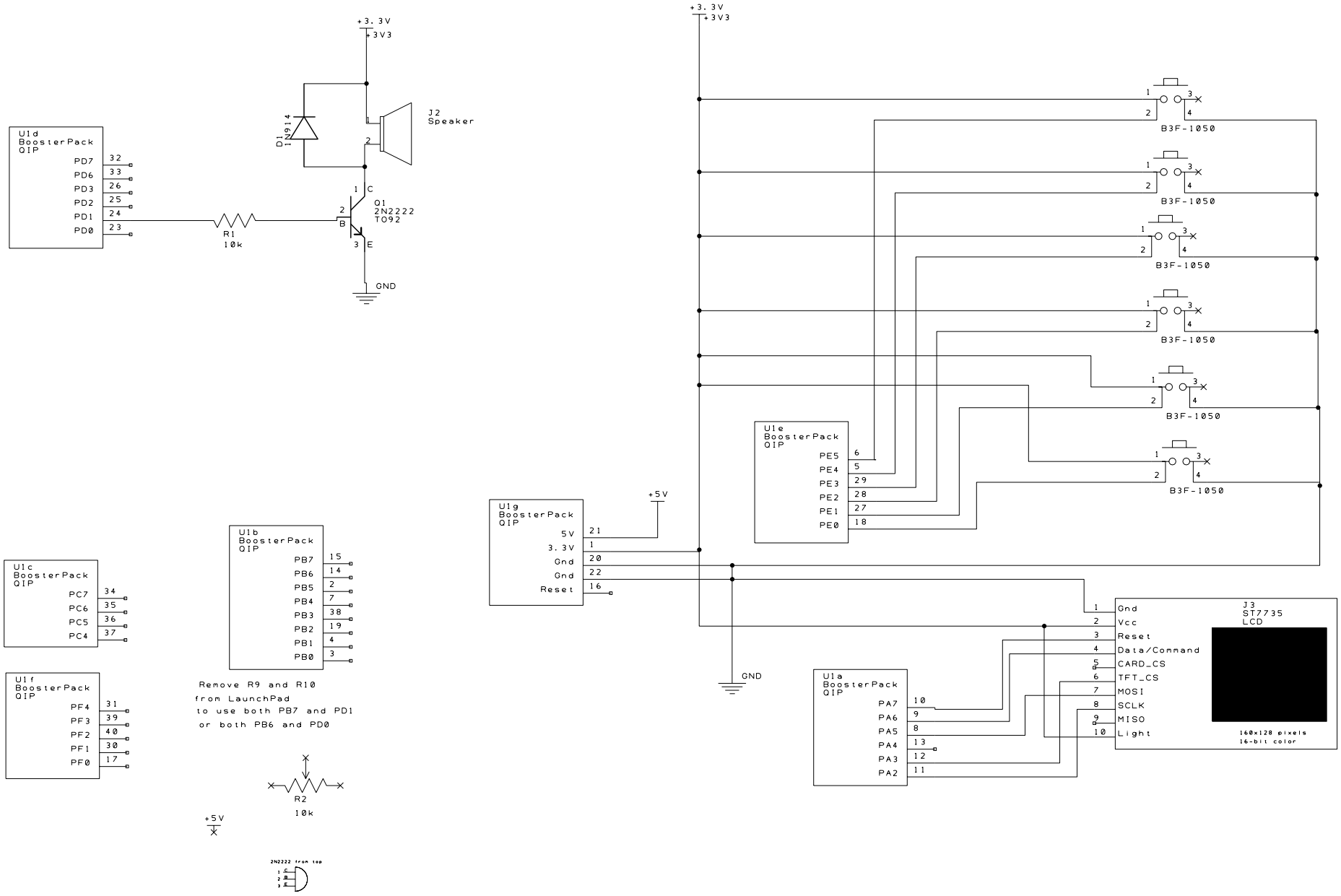

All resistors are 1/4 watt 5% carbon composition
C1 is ceramic Z5U
Switches are B3F-1052 Digikey SW405-ND
Digikey 516-1323-ND 1.6V 1mA HLMP-D150 Red LED
Digikey 516-1326-ND LED 5MM DIFF LOW CURR Yellow LED
Digikey 516-1327-ND LED 5MM DIFF LOW CURR Green LED

University Of Texas At Austin	
Schematic Name: EE445L Lab 3 Circuit Template	
Name(s): Karime Saad, Tarang Khandpur	
Date: September 20, 2017	**Semester:** Fall 2017

A1