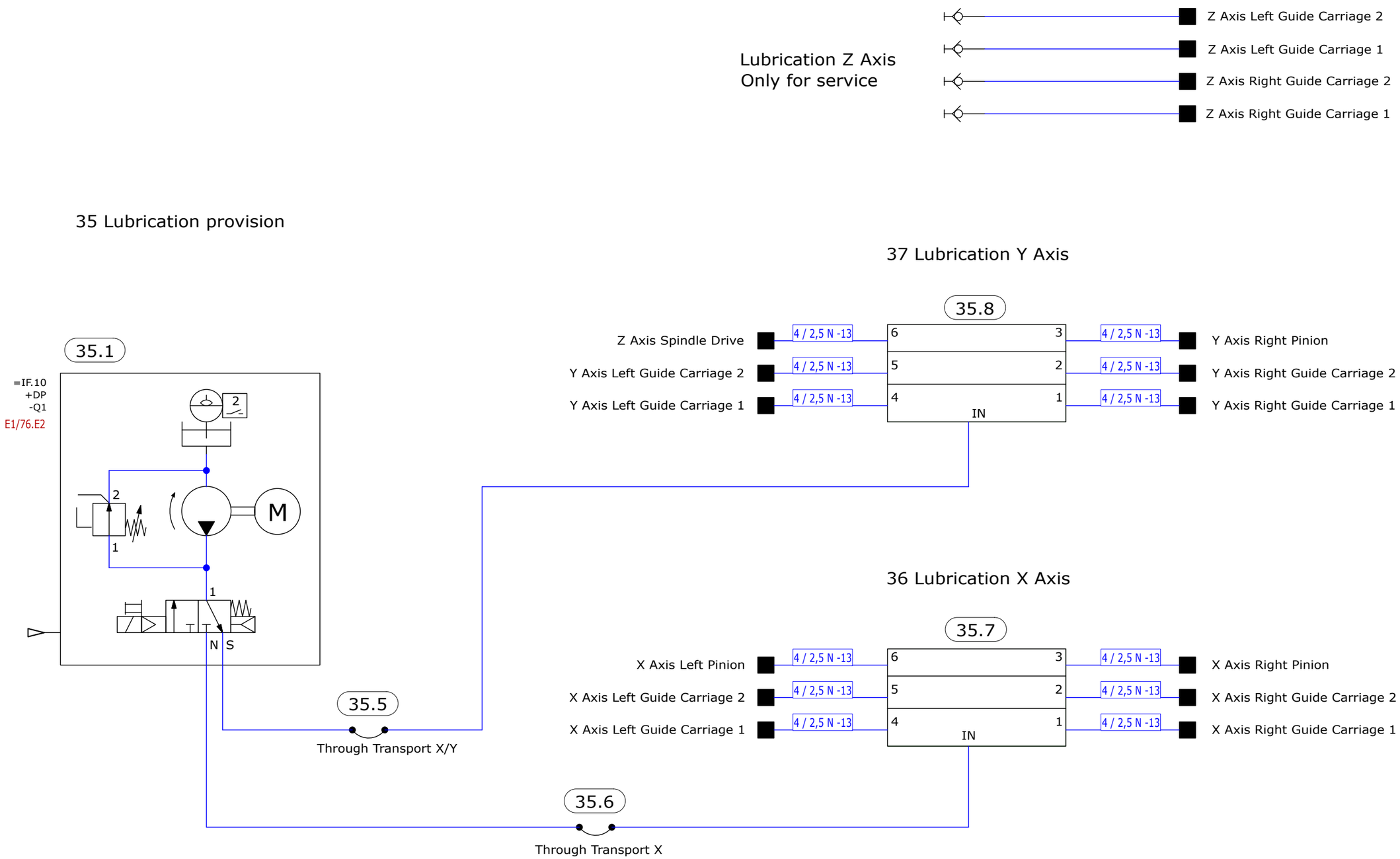

DevNo	Id.No	Designation	Type	DevNo	Id.No	Designation	Type	DevNo	Id.No	Designation	Type
35.5	2868598	Hydraulic hose Ø6*8000	RG-KB6-8000	35.7	2750692	Lubrication Distributor	LIUBIAN 3PJPQ1-N/15T/15T/18T				
35.1	2809254	Lubrication Pump Electrical	DBD-J10/15EK	35.6	2769972	Hydraulic hose Ø6*6250	RG-JK6-6250	35.8	2750692	Lubrication Distributor	LIUBIAN 3PJPQ1-N/15T/15T/18T

TRUMPF
TRUMPF Machine Tools Co., Ltd
Jiangsu
215400 Taicang
China
COPYRIGHT BY TRUMPF

Project-designation	Change number	Edited	Reviewed	Approved	Designation	Contents
Set of schematics TruLaser 1000 fiber BE	26235-26	26.12.2023 TCN511HZ	26.12.2023 TCN511HZ	26.12.2023 TCN511HZ	Lubrication schematic TruLaser 1000 fibe	Lubrication
Project number: 93630-5-E1 / Vers.proj.: 03 / Doc.type: E3S	Original record	26.12.2023 TCN511HZ	26.12.2023 TCN511HZ	26.12.2023 TCN511HZ	Document number: 93630-5-501	

Doc. part	Version	Status	Id number	Sheet	Type	Format
002	00	RE	2844057	3 of 3	L1	A3