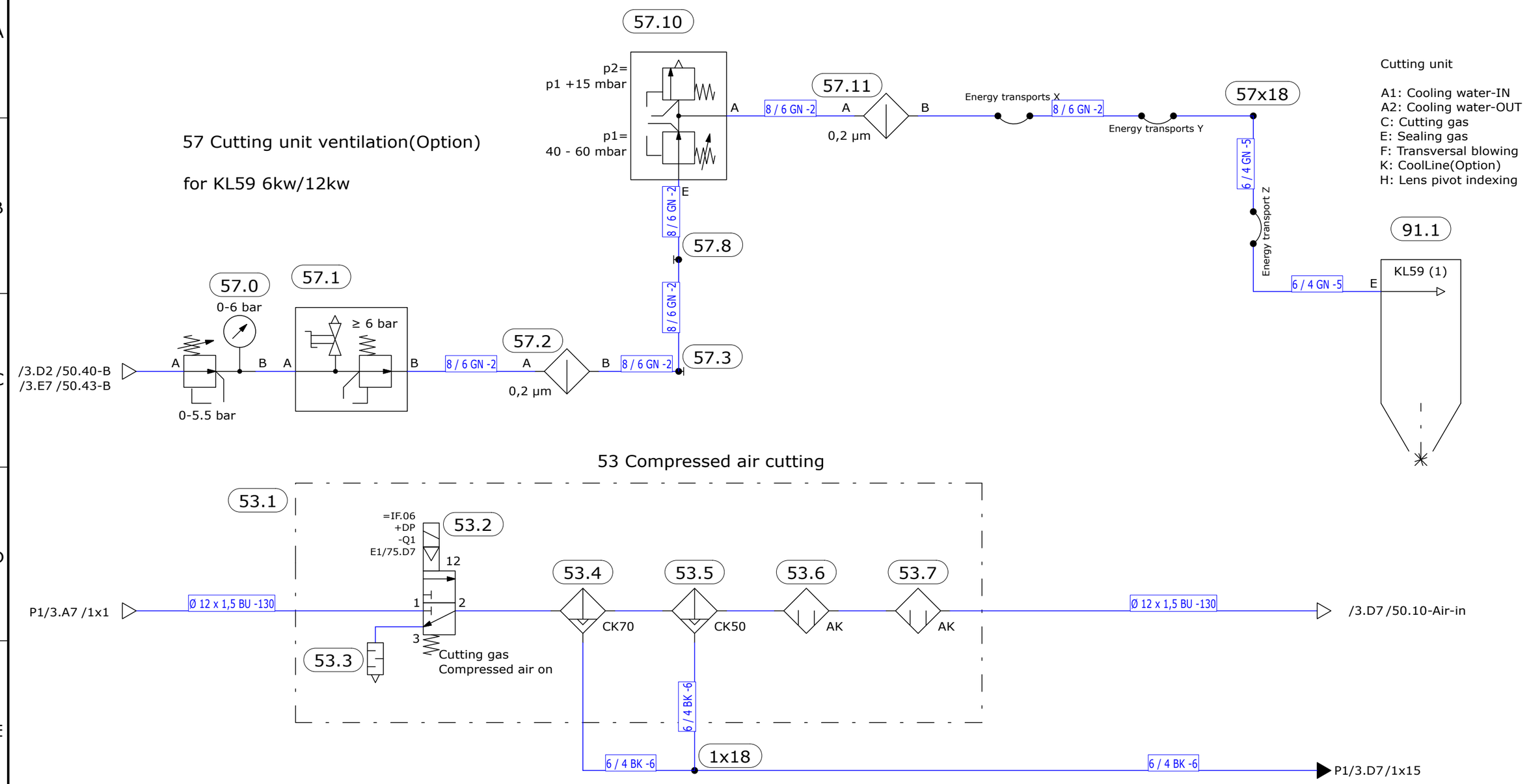

53.5	0386588	Fine-mesh filter MS6-B (HA-NO)	MS6-LFM-1/2-BIRH , 570521	57.1	2353579	Pressure shut-off valve 6 bar	11030				
53.5E	0369321	Filter element B MS6	MS6-LFM-BI , 547923	57.1E	0351056	Purge valve g1/4	71019				
53.4	0386589	Fine-mesh filter MS6-C (HA-NO)	MS6-LFM-1/2-CIRH , 570522	57.0	2513986	Pressure regulator 40bar (N2) w.	10625	91.1		CuttingUnit	KL59/BM111
53.4E	0369322	Filter element C MS6	MS6-LFM-CI , 547924	53.7	0369314	Active carbon filter ms6-1/2	MS6-LFX-1/2-AKIR , 547920	57.11	0373321	Polyglas-filter in-line	PEGF 12-53-30K
53.3	0079939	Silencer U-1/2	U-1/2 , 2310	53.7E	0369323	Filter element AK MS6	MS6-LFX-I , 547925	57.10	2488199	Pressure regulator preadjusted	10598
53.2	0369303	On-off valve ms6-1/2	MS6-EE-1/2-V24P-CS , 8088602	53.6	0369314	Active carbon filter ms6-1/2	MS6-LFX-1/2-AKIR , 547920	57.3	0067450	T-piece	1540-8/6-WGUG
53.1	0371539	Maintenance unit ms-6	571076	53.6E	0369323	Filter element AK MS6	MS6-LFX-I , 547925	57.2	0373321	Polyglas-filter in-line	PEGF 12-53-30K
DevNo	Id.No	Designation	Type	DevNo	Id.No	Designation	Type	DevNo	Id.No	Designation	Type

TRUMPF
TRUMPF Machine Tools Co., Ltd
Jiangsu
215400 Taicang
China
COPYRIGHT BY TRUMPF

Project-designation			Change number	Edited	Reviewed	Approved	Designation	Contents
Set of schematics TruLaser 1000 fiber BE			34711-08	01.02.2024 TCN511HZ	01.02.2024 TCN511HZ	01.02.2024 TCN511HZ	Gas schematic TruLaser 1000 fiber BE	Compressed air supplySealing gas
Project number	Vers.proj.	Doc.type	Original record	05.12.2023 TCN511HZ	05.12.2023 TCN511HZ	05.12.2023 TCN511HZ		
93630-5-E1	03	E3S						

Document number	Doc. part	Version	Status	Id number	Sheet	Type	Format
93630-5-601	002	01	RE	2844058	4 of 5	G1	A3