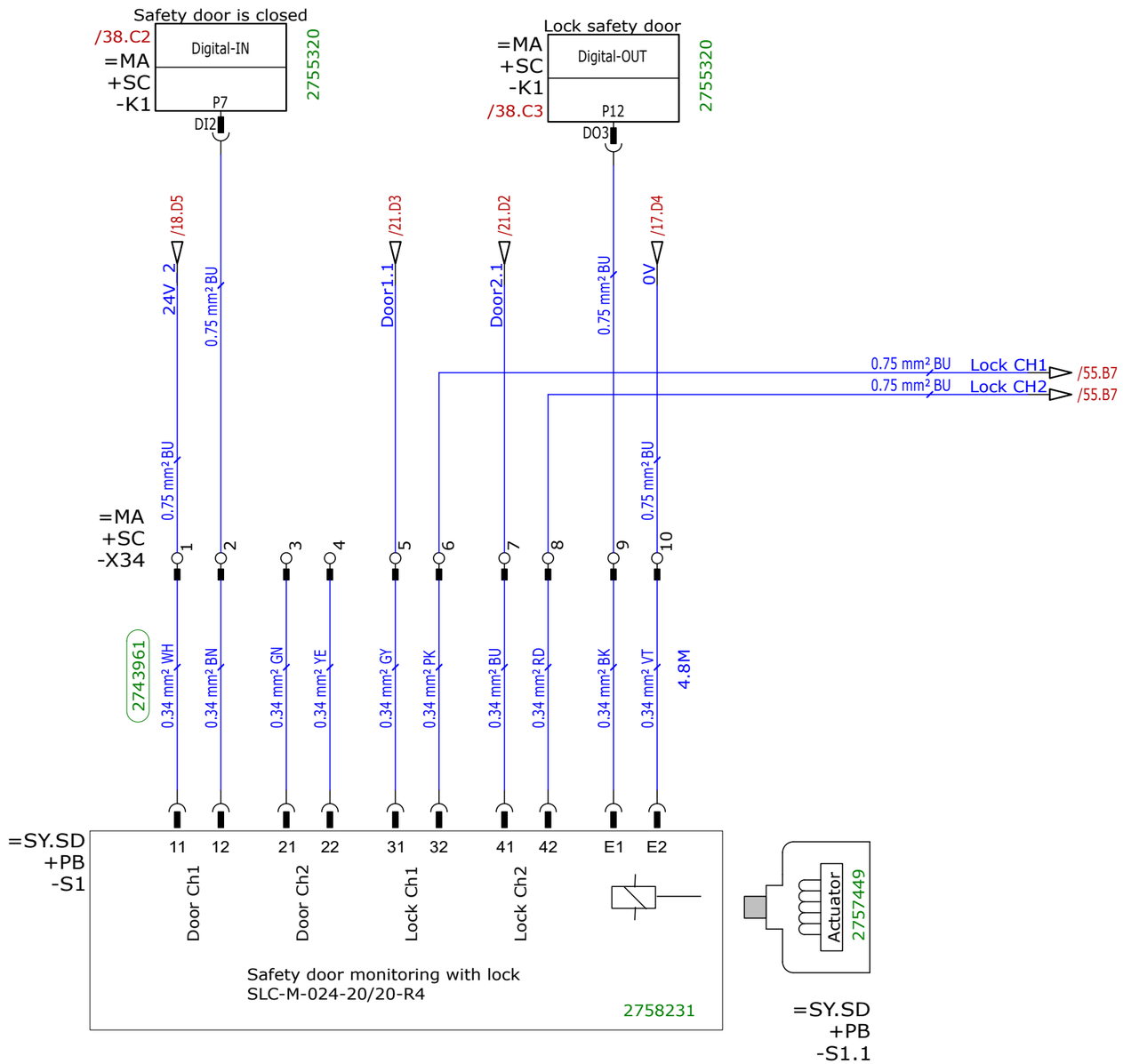

TRUMPF TRUMPF Machine Tools Co., Ltd Jiangsu 215400 Taicang China COPYRIGHT BY TRUMPF	Project-designation Set of schematics TruLaser 1000 fiber BE			Change number	Edited	Reviewed	Approved	Designation Circuit diagram TruLaser 1000 fiber BE					Contents Safety door monitoring		
	Project number 93630-5-E1	Vers.proj. 03	Doc.type E3S	34711-08	01.02.2024 TCN521ZX	01.02.2024 TCN521ZX	01.02.2024 TCN520HU	Document number 93630-5-201	Doc. part 002	Version 03	Status RE	Id number 2815136	Sheet 22 of 111	Type E1	Format A3
				Original record	03.04.2023 TCN521TE	17.05.2023 TCN521TE	17.05.2023 TCN520HU								