1 Air provision

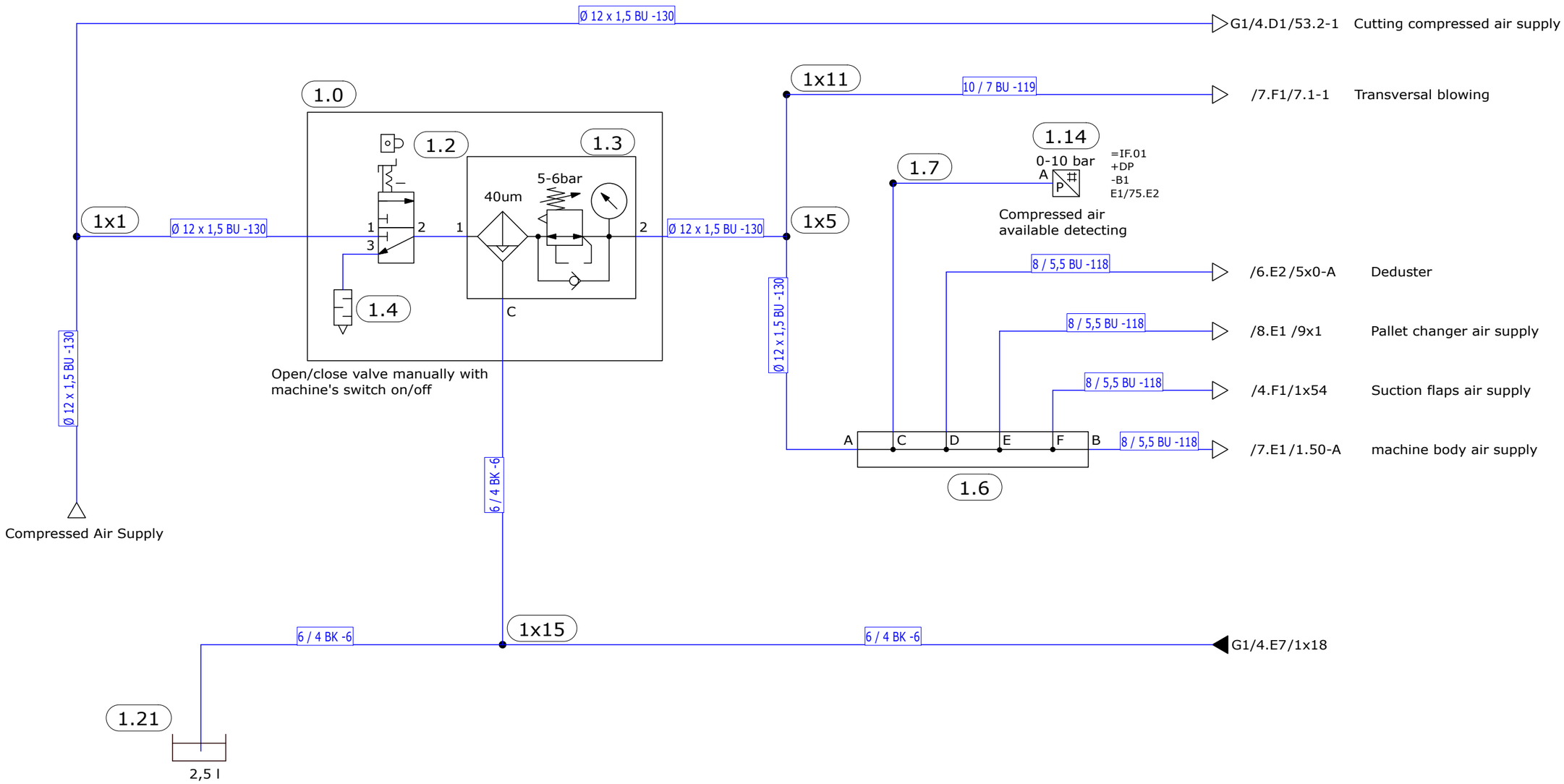

1.3E	0364032	Filter cartridge 40us ms6	MS6-LFP-E,534500	1.14	2750646	Pressure sensor	ISE30A-01-P-L				
1.3		Filter regulatoring valve MS-6	MS6-LFR-1/2-D6-ERV-AS,529182	1.7	2462118	Reducing nipple	1/4-1/8-DE02,2531				
1.2		Manual on-off valve MS-6	MS6-EM1-1/2, 541267	1.6	1942845	Distributor block 3053-3/8-4L-1/4	3053-3/8-4L-1/4				
1.0	2750636	Air Preparing Unit	L99 MS-6	1.4	0079939	Silencer U-1/2	U-1/2, 2310	1.21	1629223	Canister 2,5L, 153x115x210mm	P5001
DevNo	Id.No	Designation	Type	DevNo	Id.No	Designation	Type	DevNo	Id.No	Designation	Type

TRUMPF
TRUMPF
Machine Tools Co., Ltd
Jiangsu
215400 Taicang
China
COPYRIGHT BY TRUMPF

Project-designation			Change number	Edited	Reviewed	Approved	Designation	Contents
Set of schematics TruLaser 1000 fiber BE			34711-08	01.02.2024 TCN511HZ	01.02.2024 TCN511HZ	01.02.2024 TCN511HZ	Pneumatic schematic TruLaser 1000 fiber	Air provision
Project number	Vers.proj.	Doc.type	Original record	05.12.2023 TCN511HZ	05.12.2023 TCN511HZ	05.12.2023 TCN511HZ	Document number	
93630-5-E1	03	E3S					93630-5-301	

Doc. part	Version	Status	Id number	Sheet	Type	Format
002	01	RE	2843707	3 of 9	P1	A3