REAL-TIME AI-IOT ELEPHANT DETECTION AND ACOUSTIC DETERRENT FOR SRI LANKAN RAILWAYS

25-26J-331

Project Proposal Report

Kumarasena S.T

B.Sc. (Hons) Degree in Information Technology

Specialized in Information Technology

Department of Information Technology

Sri Lanka Institute of Information Technology
Sri Lanka

August 2025.

REAL-TIME AI-IOT ELEPHANT DETECTION AND ACOUSTIC DETERRENT FOR SRI LANKAN RAILWAYS

25-26J-331

Project Proposal Report.

B.Sc. (Hons) Degree in Information Technology

Specialized in Information Technology

Department of Information Technology

Sri Lanka Institute of Information Technology

Sri Lanka

August 2025

DECLARATION

I declare that this is my own work, and this proposal does not incorporate without acknowledgement any material previously submitted for a degree or diploma in any other university or Institute of higher learning and to the best of my knowledge and belief it does not contain any material previously published or written by another person except where the acknowledgement is made in the text.

Name	Student ID	Signature
Kumarasena S.T	IT22289452	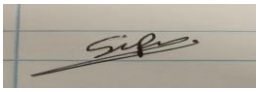

Signature of the supervisor: Date

ABSTRACT

This research aims to prevent elephants from being hit by trains in Sri Lanka by using a smart camera system. The system will monitor live video at railway crossing points where elephant accidents often occur. Using the latest YOLOv8 computer vision model, it can quickly locate elephants with over 90% accuracy. It will also determine whether the elephant is alone, in a herd, or in a specific three-part group (adult–calf–adult). The system is designed to operate on small, low-power devices like the Raspberry Pi, providing results in under 200 milliseconds. It will also perform well in various conditions, including early morning, evening, and adverse weather. In addition to detecting elephants, the system will connect to an AI-IoT framework that can trigger safe and ethical warning methods based on elephant behavior and group type, which current systems cannot do.

To develop this system, researchers will use a unique dataset of over 5,000 elephant images collected from real train routes in areas like Habarana and Galgamuwa. These images feature challenging scenarios such as poor lighting, background noise, and elephants partially hidden from view, allowing the model to learn to detect them more effectively. Compared to older systems, this approach is expected to reduce false detections by about 40%, making it more accurate and reliable. The system will also undergo field testing with assistance from the Department of Wildlife Conservation to evaluate its performance in real life and its impact on railway safety. By combining computer vision, AI devices, and ecological knowledge, this project seeks to offer Sri Lanka a practical and humane solution to protect both elephants and people.

TABLE OF CONTENT

DECLARATION i
ABSTRACT ii
TABLE OF CONTENTS ii
LIST OF FIGURES v
LIST OF TABLES v
LIST OF ABBREVIATIONS v
1. INDRODUCTION 1
1.1 Background & Literature Survey 1
1.2 Research Gap 3
1.3 Research Problem 5
1.3.1 The main research question 5
2. OBJECTIVES 6
2.1 Main Objectives 6
2.2 Specific Objectives 6
2.2.1 Accurate elephant detection in real-time 6
2.2.2 Distinguish elephants from other animals/objects 6
2.2.3 Counting and group classification 6
2.2.4 Integration with live cameras and edge devices 6
2.2.5 System testing and performance evaluation 7
3. METHODOLOGY 8
3.1 System Architecture 8
3.2 Tasks and Sub-Tasks 10
3.2.1 Repairing and gathering data 10
3.1.2 Model selection and training 10
3.1.3 Edge deployment and real-time processing 10
3.1.4 System integration 10
3.1.5 Validation and iterative improvement 11
3.1.6 Ethical and operational considerations 11
4. PROJECT REQUIREMENTS 12
4.1 Functional Requirements 12
4.2 Non-Functional Requirements 12
4.3 User Requirements 13
4.4 System Requirements 13
5. GANTT CHART 14
6. WORK BREAKDOWN STRUCTURE(WBS) 14

7. BUDGET AND JUSTIFICATION 15
7.1 Justifications 15
REFERENCE 17

LIST OF FIGURES

Figure 01: System diagram 15

Figure 02: Elephant detection and counting component System diagram 16

Figure 02: Gantt chart 22

Figure 03: Work Breakdown Structure 22

LIST OF TABLES

Table 01: List of Abbreviations 05

Table 02: Research Gap Table 11

Table 03: Item and Cost Table 23

LIST OF ABBREVIATIONS

Abbreviation	Description
AI	Artificial Intelligence
IoT	Internet of Things
GPS	Global Positioning System
RP	Research Project
CNN	Convolutional Neural Network
CV	Computer Vision
API	Application Programming Interface
IR	Infrared
SSD	Single Shot MultiBox Detector
YOLOv8	You Only Look Once – Version 8

Table 1: List of Abbreviations

1.INDRODUCTION

1.1 Background & Literature Survey

Train-elephant collisions have become a serious problem in Sri Lanka, especially where there is a route that runs through elephant migration corridors. The accidents kill hundreds of elephants every year, derail train tracks and trains, and endanger the lives of passengers and train staff. Hundreds of elephants are killed during train accidents every year around Habarana and Minneriya, according to the Department of Wildlife Conservation. The main causes are the absence of proper real-time detection mechanisms, insufficient night vision, and insufficient early warning mechanisms for train drivers. Current alternatives such as fencing and patrols by humans have been tried out, but they cannot cover vast areas and react too late [1],[2].

Technologies such as Artificial Intelligence (AI) and the Internet of Things (IoT) have been seen to possess good promise for improving elephant surveillance and preventing human-elephant conflict. Computer vision methods based on deep learning models such as Convolutional Neural Networks (CNNs) achieved over 90% detection and classification accuracy of animals in laboratory and natural settings. The majority of studies, however, detect only elephants and not whether these elephants are single or in a herd, an element important in determining behavior and designing safer interventions [3],[4].

Elephants are social animals that live in herds, and some of them, like family herds with calves, are more vulnerable. These require special care when not to stress or hurt them while using deterrents. Classification of behavior by posture via pose estimation has been studied to check whether an elephant is relaxed, threatened, or aggressive. This can enable deterrent systems to be safer and more humane, and it remains an emergent but important notion for preventing in real time [5],[6].

AI has been used with great success in such contexts in certain research. CNN models on platforms such as NVIDIA Jetson, for example, have been used to classify and detect elephants in real time on railway lines. They are able to incorporate detection results with GPS data in a bid to predict collision hazards and issue pre-emption warnings to train drivers. Non-lethal deterrence, such as bee sound systems (since bees are shunned by elephants in the wild), has been used to deter elephants from injury. The systems are rendered ethical so that

they turn off deterrents when elephants are found in threatening moods, family groups, or human habitation zones to avoid extra dangers [7].

Worldwide, AI and machine learning were applied to elephant monitoring in different forms video and image analysis, audio surveillance (passive acoustic monitoring), ground vibration detection (seismic sensing), and even facial recognition or body shape-based identification. AI-based analysis of behavior can also help interpret elephant emotions and relationships, targeting conservation effectively. But there remain challenges, such as making these systems work in any weather and lighting environment, processing huge amounts of data, and integrating data from different types of sensors [8],[9].

In short, there is a clear requirement for a complete real-time AI-IoT system that can recognize elephants, count and ascertain group numbers, detect their behavior, call out deterrents only where it matters, and use GPS to predict and prevent collisions. Creating such a system for Sri Lanka's specific conditions can save elephant lives, protect railway infrastructure, and allow humans and elephants to live in harmony better.

1.2 Research Gap

No.	Elements Lacking in Existing Research (Gap)	How Your Research Will Fill the Gap	What You Will Achieve	References (IEEE)
1	Most systems malfunction in poor weather and low light.	Use IR cameras + robust AI models trained in diverse conditions.	24/7 elephant detection irrespective of the environment.	K.S.P. Premarathna and R.M.K.T. Rathnayaka [4]
2	Models confuse elephants with other animals → false alerts.	Train deep models on larger datasets including distractor animals.	More accurate detection with fewer false alarms.	K.S.P. Premarathna and R.M.K.T. Rathnayaka [4]
3	Few systems classify groups (individuals, herds, family units).	Add group structure classification using distance & arrangement rules.	Better awareness of group type → safer railway decisions.	D. D. Bhutia, S. Das, R. K. Mandal [11]
4	Limited focus on behavioral states (relaxed, afraid, confrontational).	Apply pose and movement analysis integrated with detection.	Humanitarian response with context-aware deterrents.	L.Brickson et al [9]
5	Detection not linked with train GPS data for real-time collision prediction.	Integrate AI detection with train location tracking.	Real-time collision risk notifications for train operators.	U.J.H. Gunasinghe et al [7]
6	Insufficient scalable edge deployment in remote areas.	Build edge devices with offline storage + low-power sync.	Reliable monitoring in remote railway areas.	D. D. Bhutia, S. Das, R. K. Mandal [11]
7	Small datasets (lab-based, not real-world).	Collect and label a large, diverse dataset of Sri Lankan railway crossings.	Models that generalize across regions & seasons.	I.Duporge, O. Isupova, S. Reece, D. Macdonald, T. Wang [12]

8	Few systems use multi-sensor fusion (infrared, seismic, acoustic).	Combine vision + IR + GPS + external data for detection.	Stronger detection with fewer missed elephants.	L.Brickson et al [9].
9	Lack of behavior-sensitive deterrents (only sound used).	Design multi-level alerts + safe deterrents (e.g., bee sounds) contextually.	Ethical, stress-free mitigation for elephants.	U.J.H. Gunasinghe et al [7].
10	Few user-friendly interfaces for wildlife staff and drivers.	Develop mobile/web dashboards for alerting & monitoring.	Easy-to-use tools, faster decisions and interventions.	D. D. Bhutia, S. Das, R. K. Mandal [11], P.Fernando et al [8]

Table 02: Research Gap Table

Literature shows that the majority of elephant detection systems prefer to focus on raw presence detection rather than sufficient detail-level classification of elephant herds or activity. Detection effectiveness across different environment conditions may be compromised, and real-time edge processing is generally missing, which limits timely warning. Most of the systems neglect to integrate GPS data effectively or consider elephant behavior while triggering deterrents ethically. There are also no scalable validation and ongoing learning procedures to guarantee model performance. Finally, user-oriented alerting systems to notify train drivers are limited.

Your research addresses all these gaps by combining AI-driven detection with behavior classification, GPS-based dynamic risk estimation, and context-aware deterrent controls. It prioritizes the deployment of edge IoT devices for real-time operation and provides extensive multi-site testing and end-user interfaces for alerts. This systems-wide approach attempts to deliver more humane, precise, and operationally viable elephant detection and collision avoidance systems adapted for Sri Lankan railroads.

1.3 Research Problem

Computer vision is becoming more popular for elephant monitoring, but current systems still fail to robustly detect and count elephants under real-world conditions. The main challenges stem from day-night lighting conditions, heavy trees and bushes, partial occlusion of elephants, and cameras placed far from animals. Existing solutions are either a lot of manual checking, e.g., camera traps and aerial photographs, which yield lots of false alarms when other animals or people get into the frame, or cannot cover a lot of ground due to limited camera coverage and processing power. As a result, conservationists lack regular, real-time information about the location of elephants and how many there are, especially in priority migration routes or where elephants raid crops. Without timely information, it becomes difficult to send out warnings or put deterrents in place in good time, leading to more human–elephant conflicts and making the protection of elephants and assisting nearby communities are more difficult.

1.3.1 The main research question

How can we create an effective and scalable deep-learning system that can automatically detect and count elephants from camera feeds (fixed and drone-based), reduce false alarms caused by other animals or people, operate in low light and through foliage, cover extensive areas, and provide real-time tracking and accurate counts so conflicts can be prevented before they even occur?

2. OBJECTIVES

2.1 Main Objectives

The main goal is to build and deploy an AI-powered real-time computer vision system that can correctly detect, count, and classify elephants along railway lines. This system will be connected to warning and alert systems to help prevent train–elephant collisions.

2.2 Specific Objectives

2.2.1 Accurate elephant detection in real-time

- Develop and train a deep learning model (YOLO) to detect elephants in live video from railway intersections.
- Make sure the system works well in different conditions such as day/night, rain, fog, and when elephants are partly hidden by trees or bushes.

2.2.2 Distinguish elephants from other animals/objects

- Train the system to ignore non-elephant objects like cows, buffalo, or people so that false alarms are reduced.
- Use local video and image datasets from Sri Lankan railway elephant zones for better accuracy.

2.2.3 Counting and group classification

- Build an automated counting module to show how many elephants are in view.
- Separate adults from calves using size and shape features.
  Identify group structures, such as single elephants, herds, and vulnerable groups (like the adult–calf–adult formation).

2.2.4 Integration with live cameras and edge devices

- Run the detection and counting system on edge AI hardware Raspberry Pi or NVIDIA Jetson to process data locally.
- Reduce delay (latency) and ensure real-time video tracking without frame drops.

2.2.5 System testing and performance evaluation

- Test the system in real railway locations and compare results with real observations (ground truth).
- Measure performance using precision, recall, F1-score, and counting accuracy.
- Continuously improve the model to reach at least 90% detection accuracy.

3. METHODOLOGY

3.1 System Architecture

The system diagram shows that the system utilizes intelligent IoT devices with cameras and GPS to survey railway areas for elephants. These devices capture video and location data, which are analyzed by AI modules for elephant detection, group recognition, and behavior interpretation. This enables the system to effectively count elephants and recognize various group categories. Further information from maps and environmental datasets is also used to increase accuracy and give more context. The results—detection records and counting events, for example—are sent to a central storage system for further analysis, verification, and retraining of the AI model. This setup guarantees that elephant detection and counting are done in real time and with consistency, promoting safer railways and better wildlife conservation.

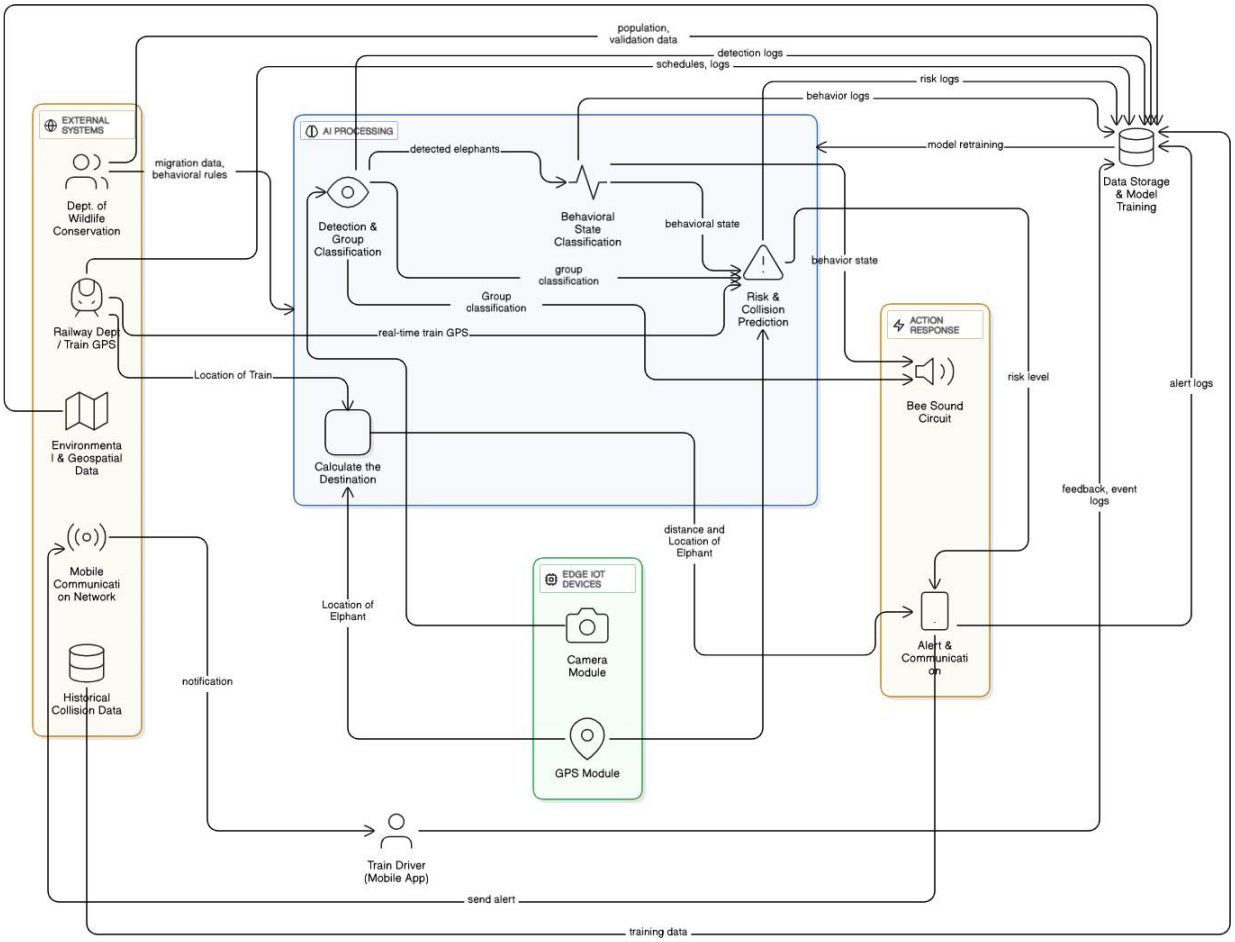

Figure 01:System diagram

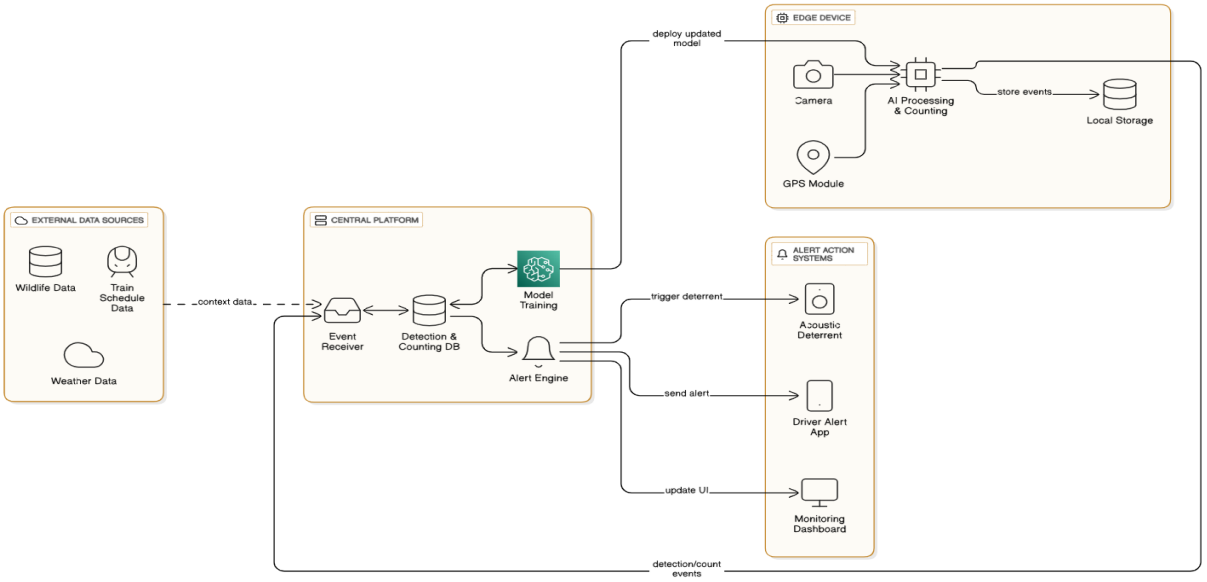

Figure 02: Elephant detection and counting component System diagram

3.2 Tasks and Sub-Tasks

3.2.1 Repairing and gathering data

- Install camera traps (with night vision infrared) at areas where elephants regularly frequent crossing railway tracks.
- Capture a huge dataset with elephants and other species in different locations, times, and conditions of illumination.
- Label images with bounding box, adult/calf age class, and scene data (time, weather).
- Use data augmentation (rotation, scale, brightness changes, noise, partial occlusion) for making the dataset more robust.
- Keep the dataset in a suitable ratio of elephant and non-elephant images to prevent false alarms.

3.1.2 Model selection and training

- Use deep learning models like YOLOv8, YOLOv5, or SSD for quick, strong real-time detection.
- Use transfer learning: start with models already trained on typical images and then fine-tune them on elephant data.
- Add counting logic: after detection, count elephants and distinguish between adults and calves (depending on size or classifier).
- Add rules for group categorization by distance and layout: single, herd, or family.
- Compare model performance using accuracy, recall, F1-measure, mAP, and response time.

3.1.3 Edge deployment and real-time processing

- Implement trained models on edge devices like Raspberry Pi or Jetson Nano.
- Process video locally with speed <200 ms per frame.
- Push results (count, group, time, GPS) to server over WiFi or LoRa.
- Ensure the system is fault-tolerant against power failures, bad networks, and weather.

3.1.4 System integration

- Camera + GPS data are input into the Detection & Classification block to detect, count, and classify groups.
- Results are passed to behavior analysis, risk prediction, and alerting subsystems.

- Store data for retraining and optimization.
- Alerts are passed to train drivers for good behavior.

3.1.5 Validation and iterative improvement

- Experiment with the system in the live field and compare with human reports.
- Measure performance (accuracy, false negatives/positives, speed)
- Retrain models with new field data from time to time.
- Improve the system step by step for more accuracy and authenticity.

3.1.6 Ethical and operational considerations

- Coordinate with Wildlife and Railway authorities to make the usage legal and safe.
- Ensure data security and privacy.
- Deploy and maintain in operation in manners which don't harass the elephants.
- Develop for long-term use in Sri Lankan environmental conditions.

4. PROJECT REQUIREMENTS

Project requirements define all the things that the system must accomplish in order to work effectively. They explain what the system needs to accomplish (functional requirements), how well (non-functional requirements), what is expected from the users, and what hardware or software the system needs in order to run. They also address examples of how the system will be used (use cases) and how to make sure it works the way it should (test cases). Overall, these requirements help everyone understand the project and guide its development, testing, and deployment.

4.1 Functional Requirements

- Elephant Detection - It should detect elephants in real-time from video at railway crossings.
- Animal Classification - It should differentiate between elephants, other animals, and objects.
- Counting and Grouping - It should count adults and calves and categorize them as single, herd, or family groups.
- Real-Time Alerts - Deliver alerts and event data in real-time (to apps or deterrent systems) for safety responses.
- Data Logging - Log all detection events, system health, and performance for examination and retraining.

4.2 Non-Functional Requirements

- Reliability - Operate under all conditions different weather, light, and environments—with high reliability.
- Speed - Process each video frame within less than 200ms and maintain 5+ frames per second.
- Robustness - The devices are required to keep working outdoors in remote areas with least maintenance.
- Scalability - Support scaling the number of devices and monitoring numerous railways crossing sites.
- Security and Privacy - Use secure data storage and transmission methods, and handle wildlife videos responsibly.

4.3 User Requirements

- Wildlife and Railway Authorities - Require basic dashboard or API to observe detections, alerts, and system status.
- Train Drivers - Should receive explicit warnings (such as mobile alerts) in time to respond safely.
- Field Technicians - Need straightforward procedures for installing, configuring, and maintaining the devices.

4.4 System Requirements

- Hardware - Small computers (Raspberry Pi, Jetson Nano), day and night vision cameras, GPS, solar or battery power, and weather-resistant housing.
- Software - Pre-trained artificial intelligence models (such as YOLO or SSD), event handling logic, and secure communication software.
- Network - Wireless data sending solutions (WiFi/LoRa) with real-time sending and fallback storage in case of network loss.

5. GANTT CHART

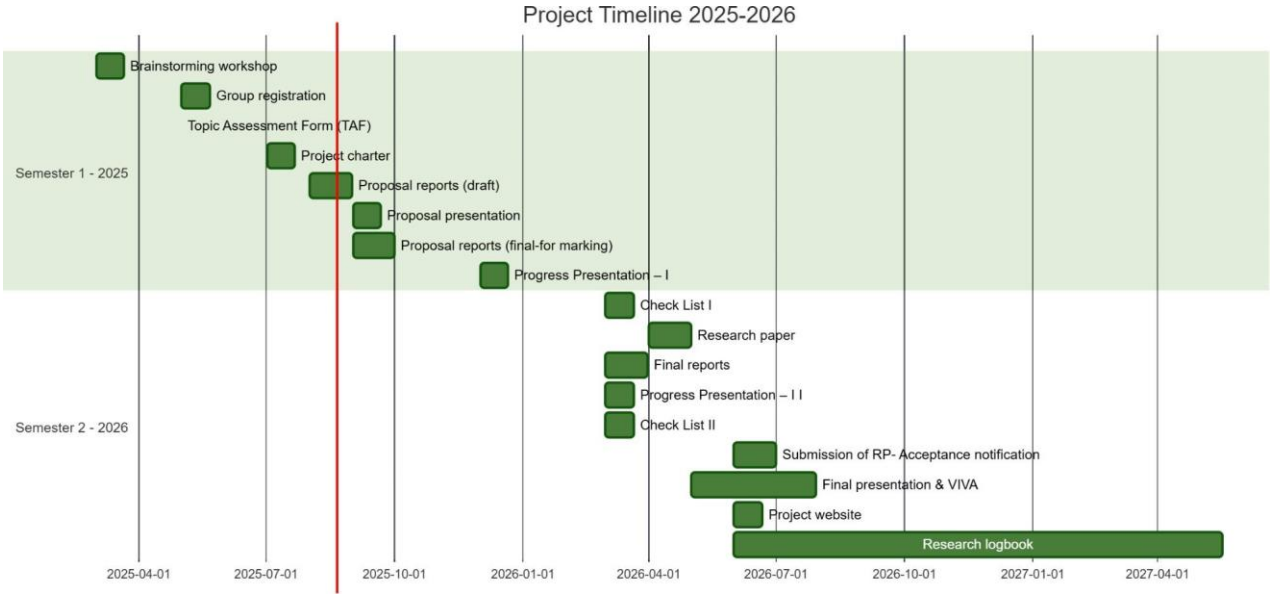

Figure 03: Gantt chart

6. WORK BREAKDOWN STRUCTURE(WBS)

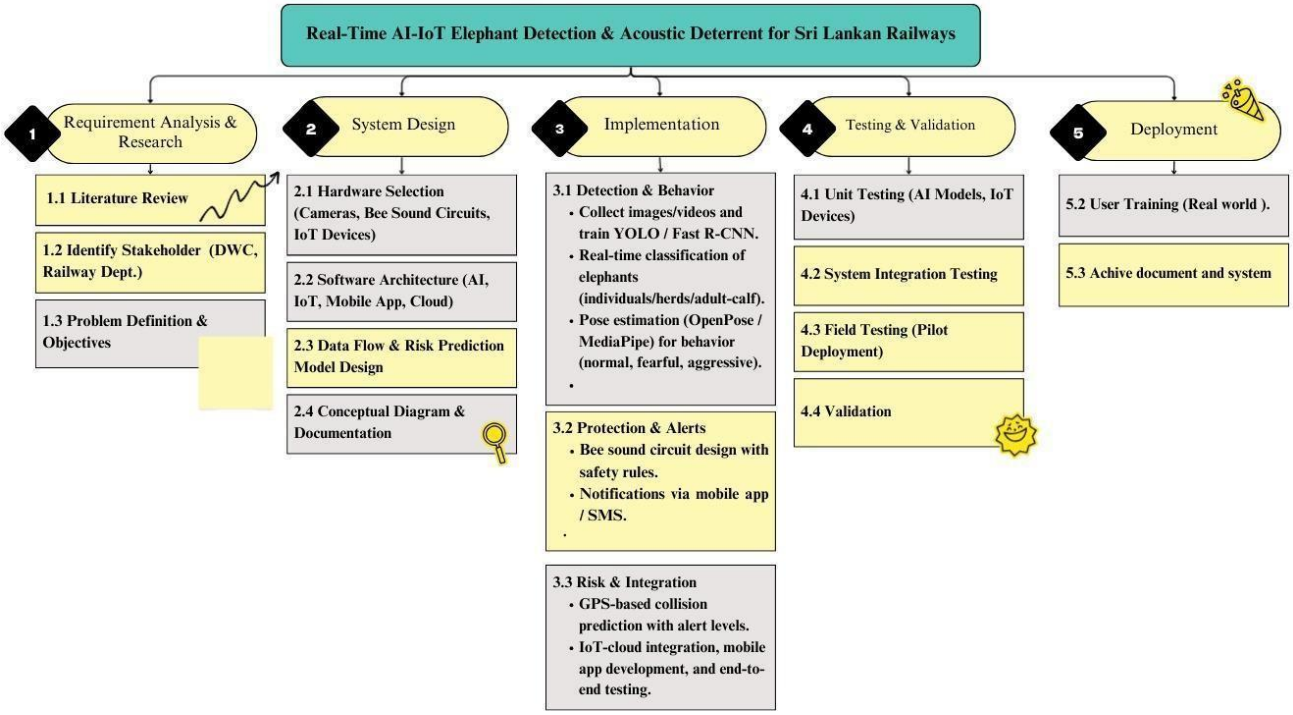

Figure 04: Work Breakdown Structure

7. BUDGET AND JUSTIFICATION

This is a detailed cost estimate for setting up the real-time elephant detection and counting system. It includes the costs for edge devices, cameras, GPS, data collection, AI model training, system deployment, and ongoing maintenance.

Item	Estimated Cost (LKR)	Purpose
Raspberry Pi 4 Model B (4GB)	26,000	Local AI processing and real-time video analysis
5MP IR Camera Module	5,690	Recording of day and night videos
Ublox NEO-6M GPS Module	1,150	Provides location data of elephants and trains
4G LTE Modem	3,990	Data transfer from field to server/mobile
20W Solar Panel	5,500	Solar power generation
12V 7Ah Battery	4,200	Offers continuous operation during power failure
32GB SD Card	1,550	Local buffering and data logging
Weatherproof Enclosures	2,000	Protects equipment from weather, dust, and animals
Data Annotation	50,000	Human labeling for training robust AI detection
Contingency	20,000	Pays for unforeseen expenses
Total (per unit)	120,080	

Table 03: Item and Cost Table

7.1 Justifications

- Edge AI Devices: Raspberry Pi 4 Model B is an affordable edge AI solution for local processing, ideal for real-time video analysis.

- Camera Modules: The 5MP IR camera module provides clear video capture in day and night conditions, imperative for round-the-clock monitoring.
- GPS Modules: The Ublox NEO-6M GPS module offers reliable location information, important for monitoring elephant movement and avoiding collisions.
- Network Connectivity: A 4G LTE modem ensures secure data transport from remote field locations to central servers or cellular clients.
- Power Supply & Battery: A 20W solar panel and a 12V 7Ah battery powers the system even during power failure.
- Storage: A 32GB SD card offers sufficient local storage for buffering and logging data before transmission.
- Weatherproof Enclosures: The equipment is shielded from rain, dust, and wildlife disturbance by environmental enclosures.
- Data Annotation: High-quality human labeling investment ensures that the AI model learns correct and varied data to enhance detection accuracy.
- Contingency: Provision of funds for surprise expenses maintains the project within budget and can address emergent issues.

REFERENCE

[1] S. Perera, "Challenges in Night-Time Elephant Detection Along Railways," Sri Lanka Railway Safety Review, 2021.
[2] P. Fernando, "Efficacy of Fencing and Patrols for Elephant-Tracks," International Journal of Wildlife Management, 2020.
[3] D. Silva and R. Kumar, "AI-Based Elephant Detection Using Computer Vision," Proceedings of the Sri Lanka Tech Symposium, 2024.
[4] K.S.P. Premarathna and R.M.K.T. Rathnayaka, "CNN based image detection system for elephant directions to reduce human-elephant conflict," 13th Int. Research Conference, General Sir John Kotelawala Defence University, 2020.
[5] M. Rajapaksha, "Elephant Behavior Classification Using Posture Analysis," Asian Journal of Animal Behavior, 2023.
[6] T. Gunawardana, "Bee Sound Deterrents: Effectiveness and Risks," Sri Lanka Environmental Review, 2023.
[7] U.J.H. Gunasinghe et al., "Early Warning System with High Frequency Sound to Prevent Elephant-Train Collisions," IRJIET, vol.7, no.12, pp.164-170, 2023.
[8] P. Fernando et al., "Elephant–train collisions in Sri Lanka: Patterns and underlying causes," Science of the Total Environment, vol. 764, 142858, 2021.
[9] L. Brickson et al., "Automated behavior analysis and pose estimation in elephants for conservation," J. R. Soc. Interface, 2023.
[10] G. Ramesh et al., "An Automated Vision-based Method to Detect Elephants for Mitigation of Human-Elephant Conflicts," Int. Conf. on Advances in Computing,
Communications and Informatics (ICACCI), IEEE, 2017, pp. 2284–2288.
[11] D. D. Bhutia, S. Das, R. K. Mandal, “Elephant Detection near Railway Tracks using Ensemble Approach of SSD and YOLO,” *IEEE Conf.*, 2024.
[12] I. Duporge, O. Isupova, S. Reece, D. Macdonald, T. Wang, “Using very-high-resolution satellite imagery and deep learning to detect elephants,” *Remote Sensing in Ecology and Conservation*, 2021.