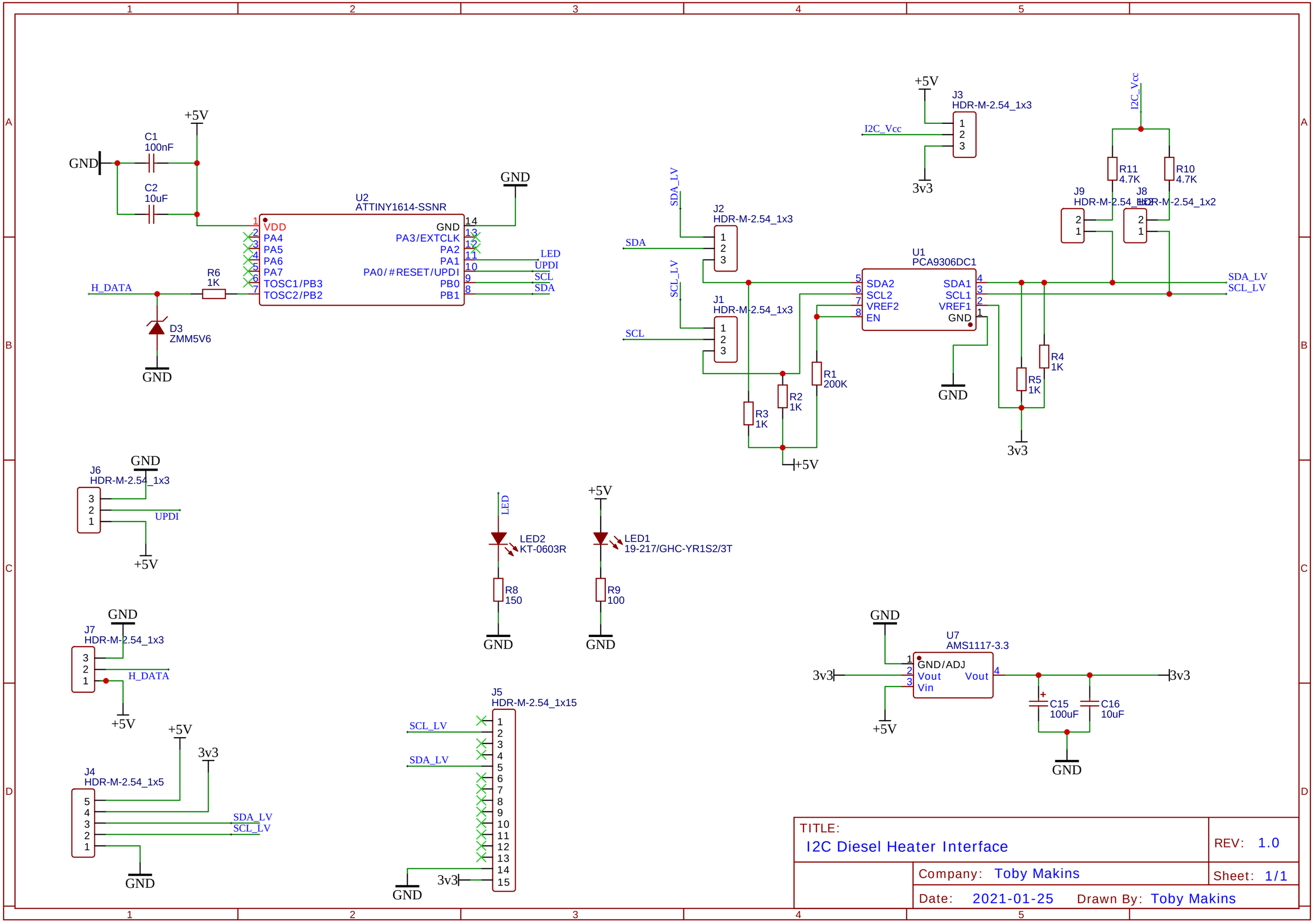

TITLE: I2C Diesel Heater Interface

REV: 1.0

Company: Toby Makins

Sheet: 1/1

Date: 2021-01-25

Drawn By: Toby Makins