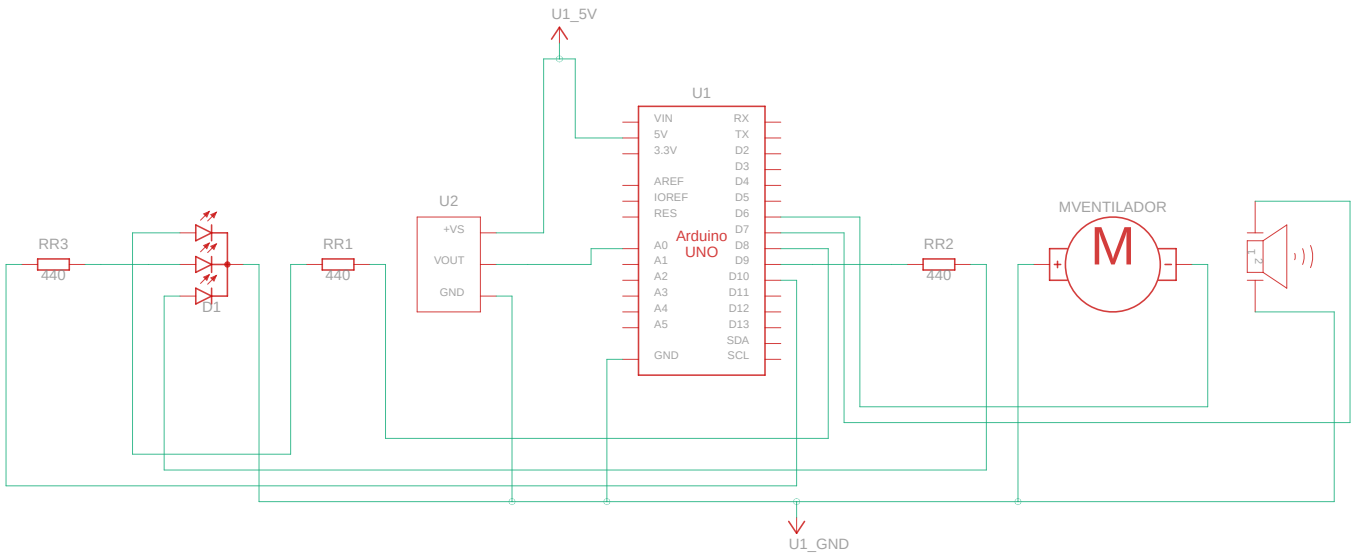

Made with Tinkercad®

Title: Estufa Hortaliça IoT	
Date: 04/03/2023, 16:22:46	Sheet: 1/1