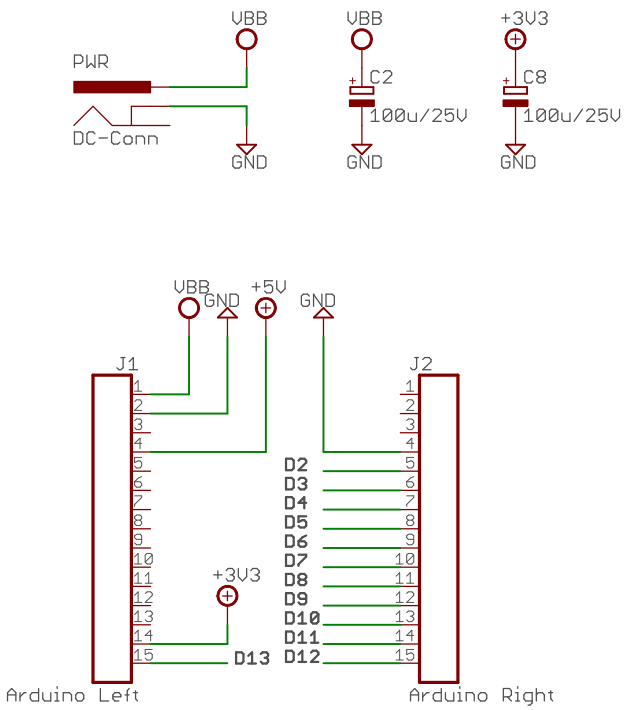

FILE: Peristaltic pump driver	V3.1 6x +TEC	Eagle V7
Date: 2-7-2024 09:25	Sheet: 1/4	

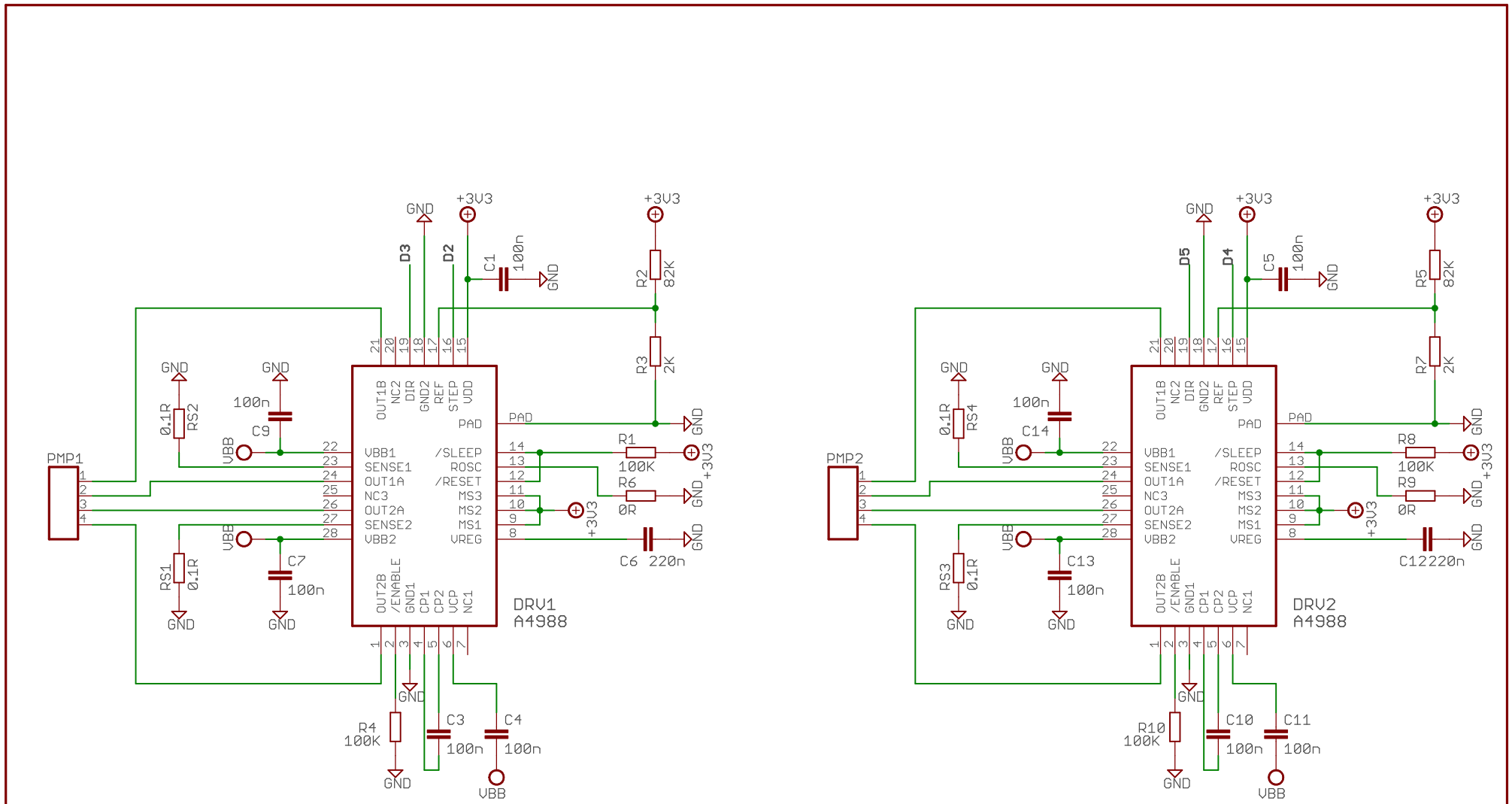

FILE: Peristaltic pump driver	V3.1 6x +TEC
Date: 2-7-2024 09:25	Sheet: 2/4

Eagle V7

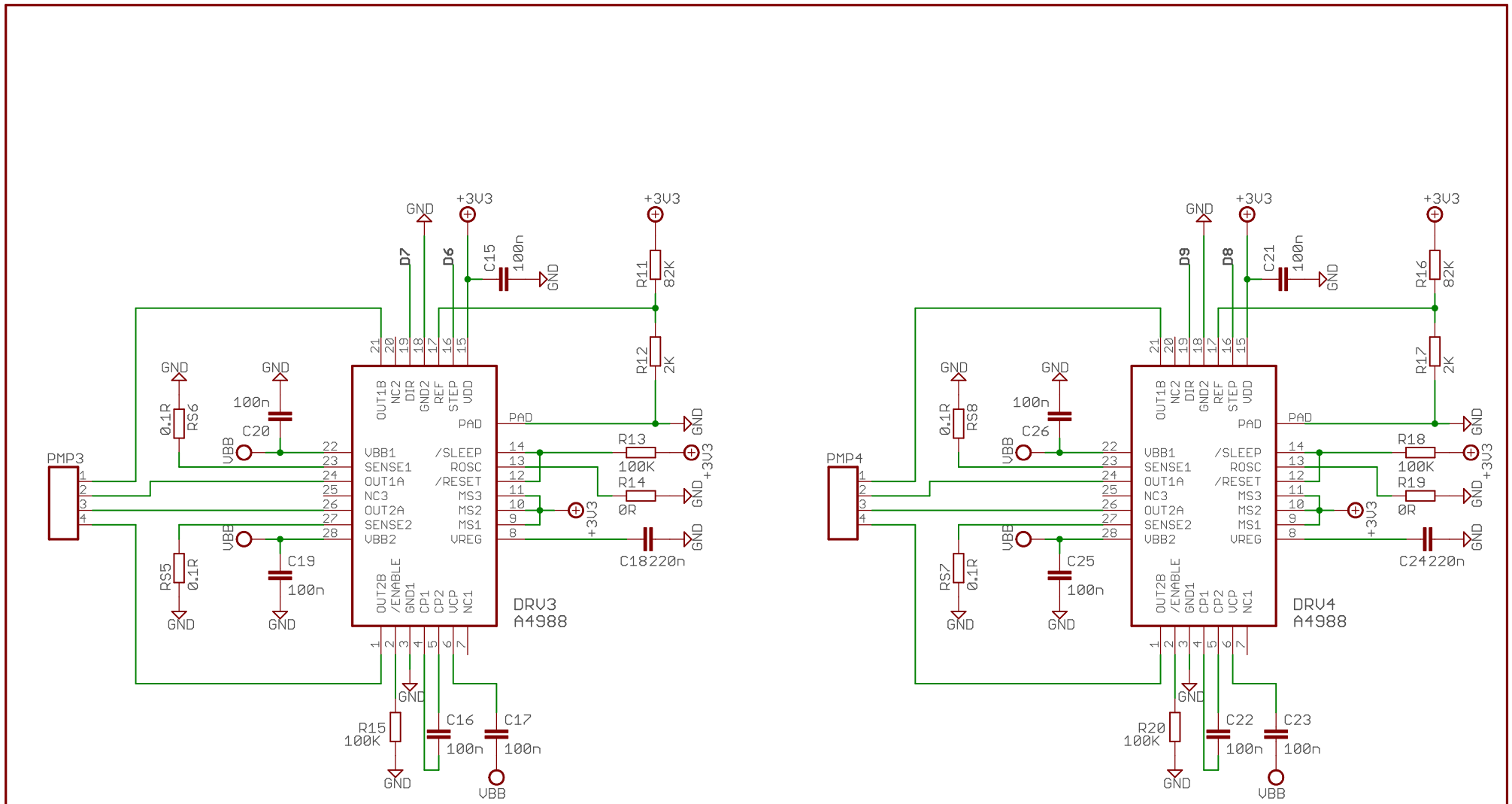

FILE: Peristaltic pump driver	V3.1 6x +TEC
Date: 2-7-2024 09:25	Sheet: 3/4

Eagle V7

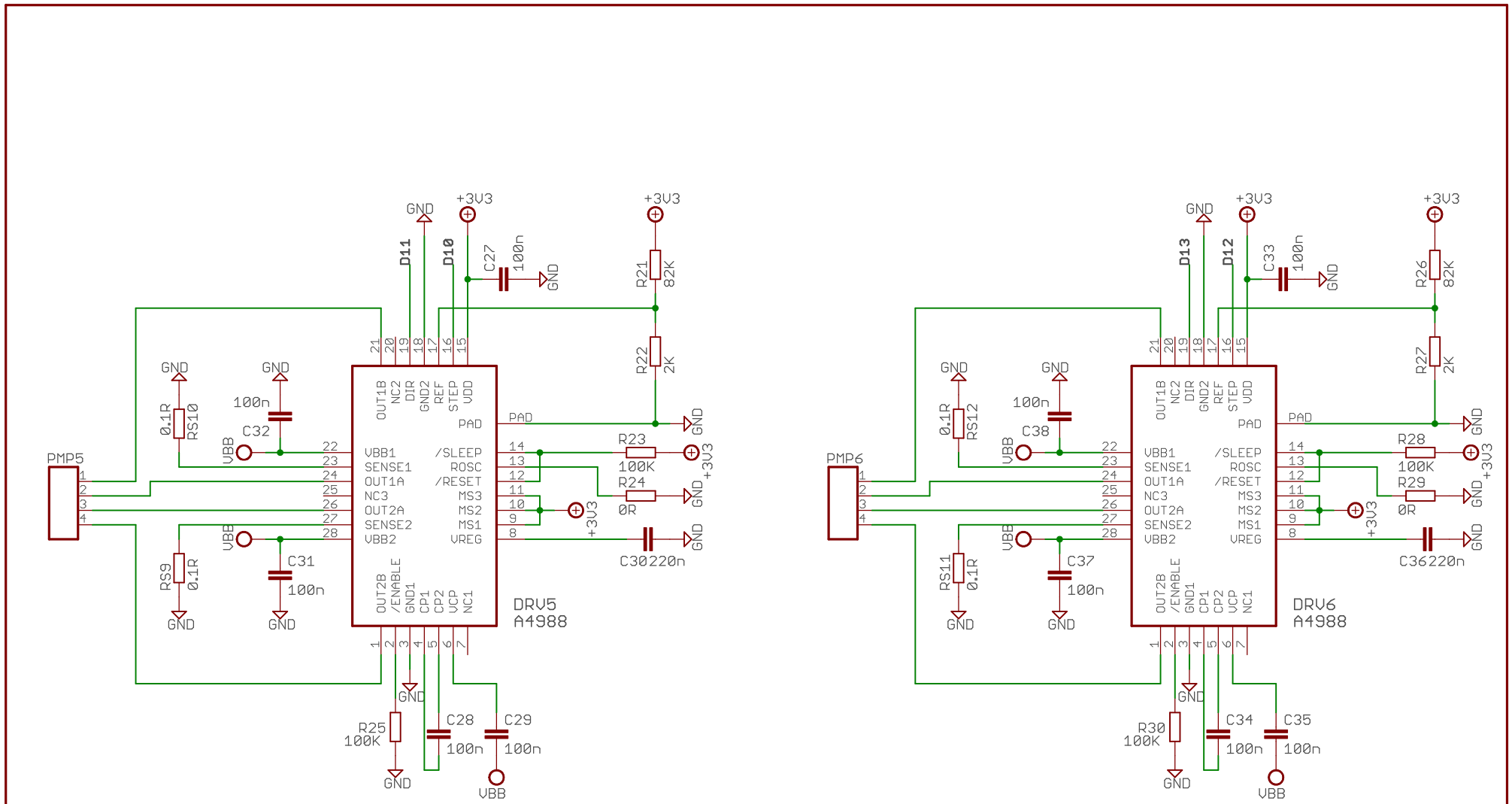

FILE: Peristaltic pump driver	V3.1 6x +TEC	Eagle V7
Date: 2-7-2024 09:25	Sheet: 4/4	

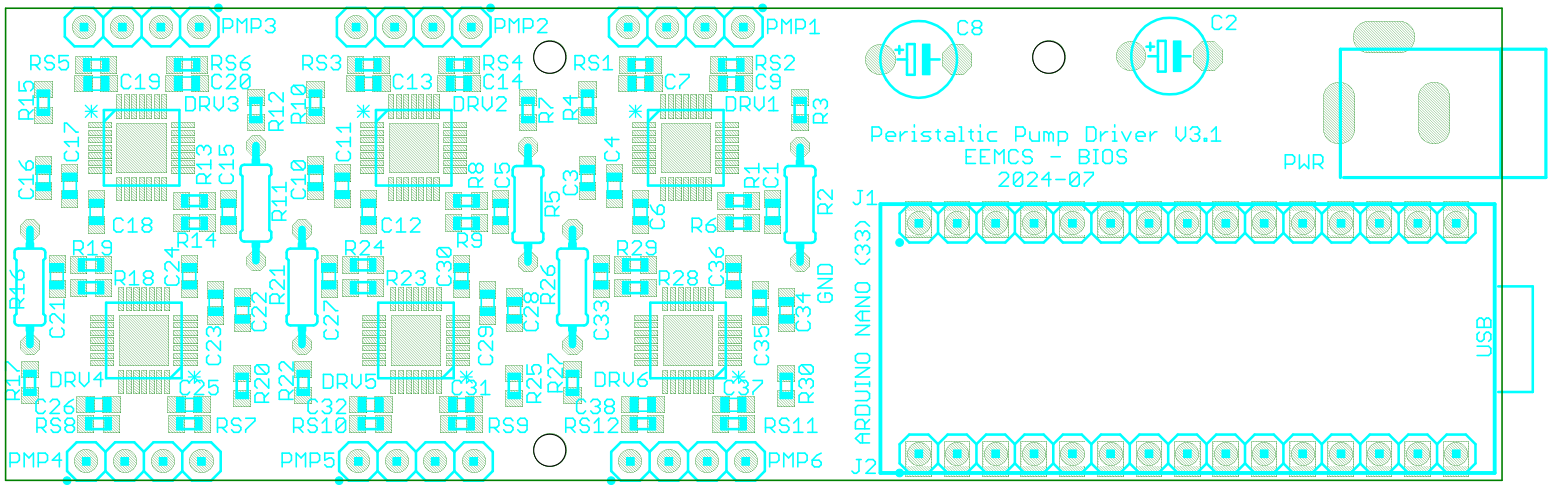
PMP3
PMP2
PMP1
RS5
RS6
RS3
RS4
RS1
RS2
C19
C20
C13
C14
C7
C9
DRV3
DRV2
DRV1
R15
R12
R10
R7
R4
R3
C17
C16
R13
C15
C11
C10
C5
C3
C4
C1
R11
R8
R1
R2
C18
R14
C12
C6
R6
R19
R24
R29
R16
R18
C24
R21
R23
C30
R26
R28
C36
GND
C21
C22
C27
C28
C33
C34
C23
C29
C35
R17
DRV4
DRV5
DRV6
C25
R20
R22
R25
R27
R30
C26
C32
C31
C38
C37
RS8
RS7
RS10
RS9
RS12
RS11
PMP4
PMP5
PMP6
C8
C2
Peristaltic Pump Driver V3.1
EEMCS - BIOS
2024-07
PWR
J1
ARDUINO NANO (33)
USB
J2

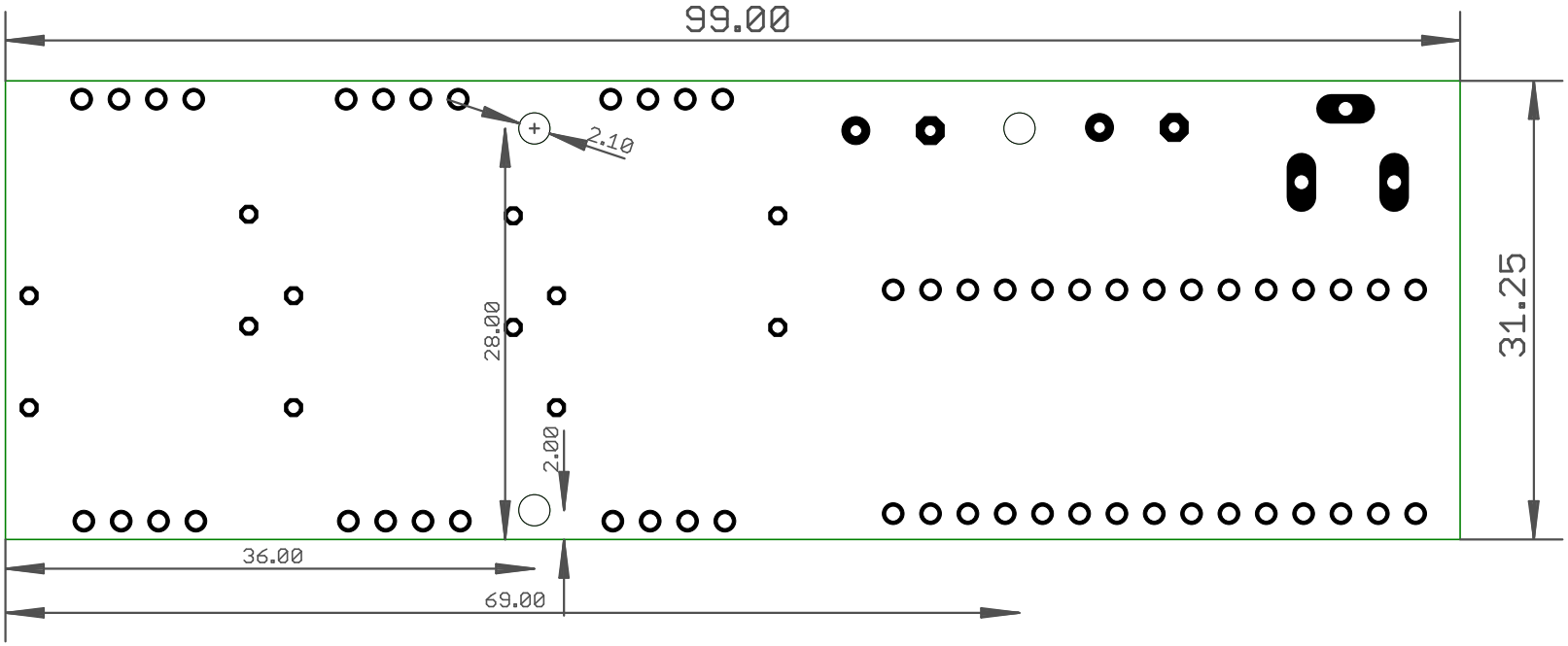
99.00
2.10
28.00
2.00
31.25
36.00
69.00

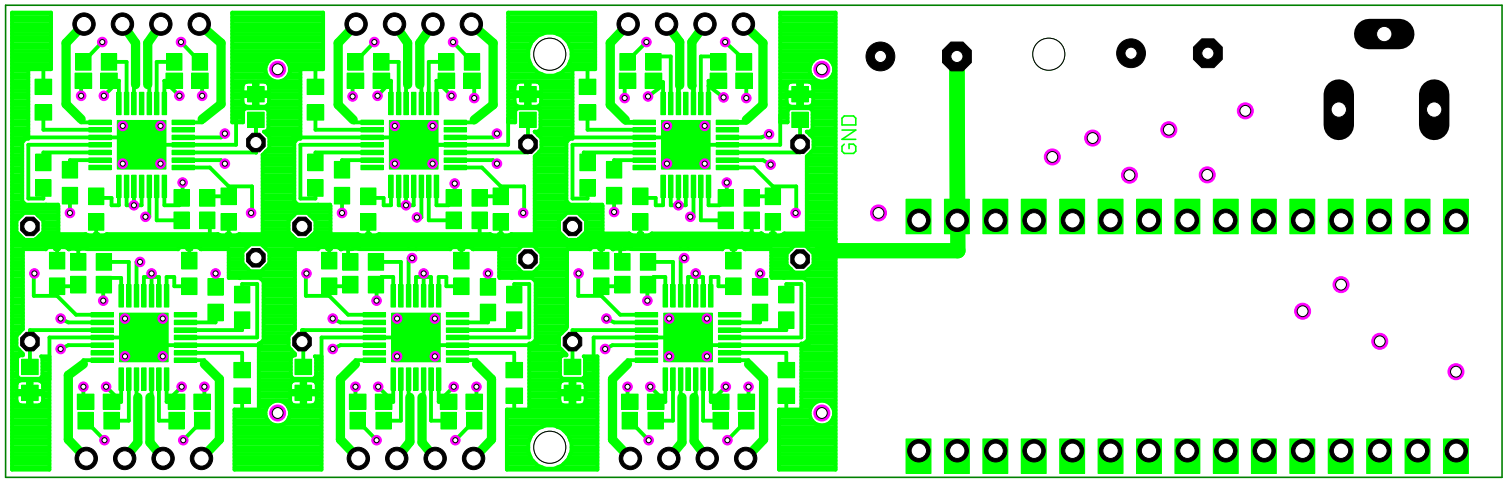
GND

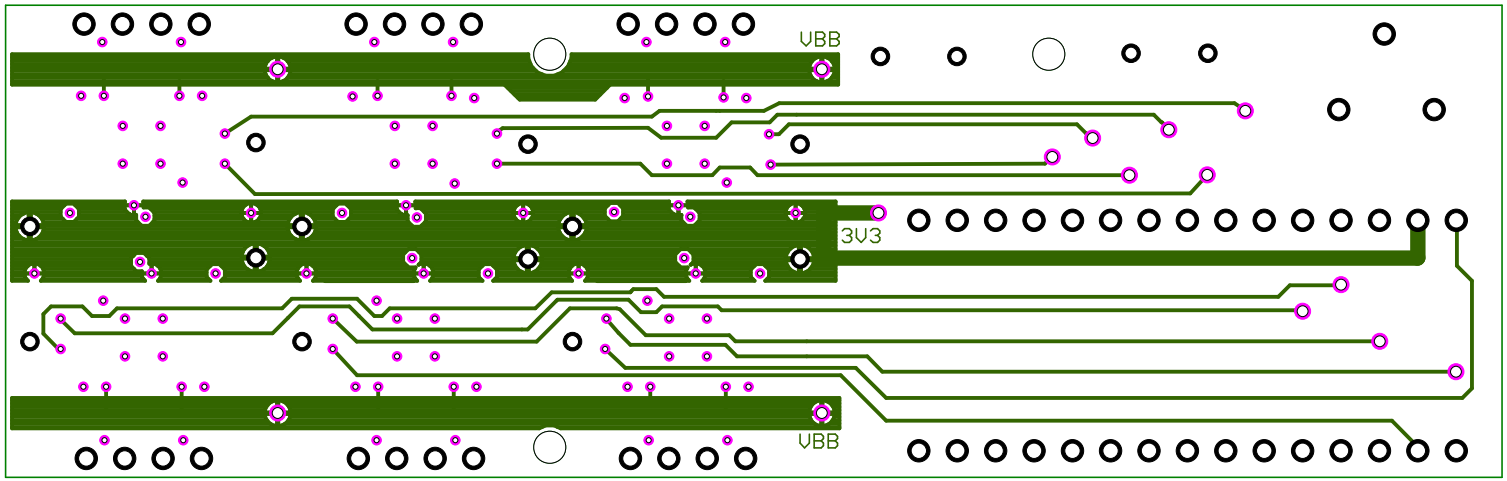
VBB
3V3
VBB

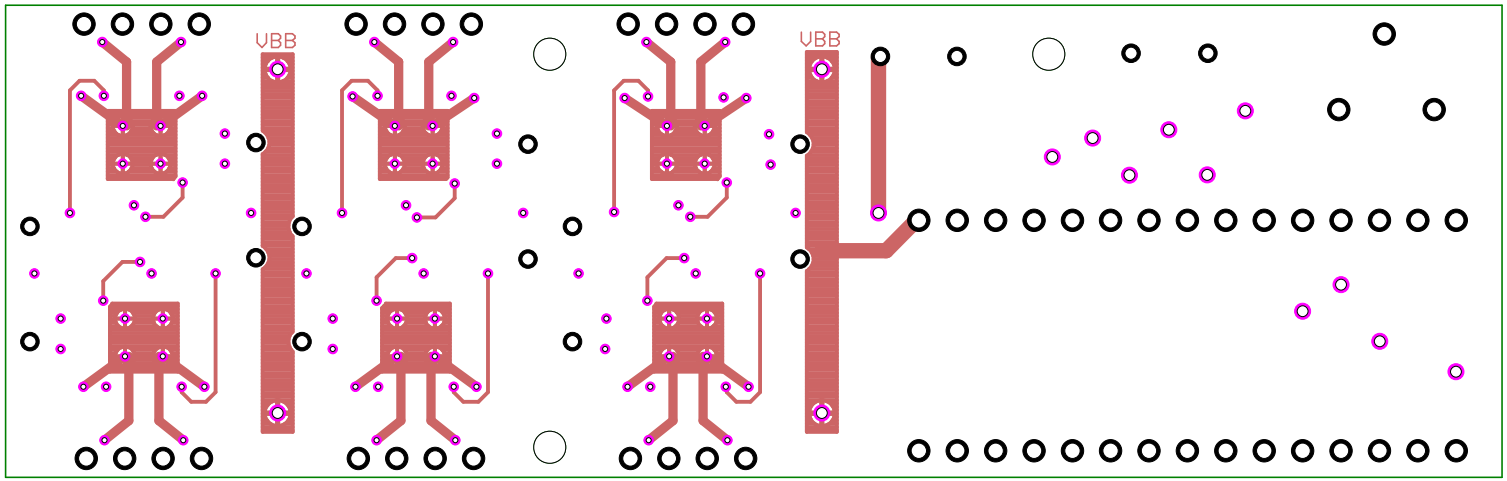
VBB
VBB

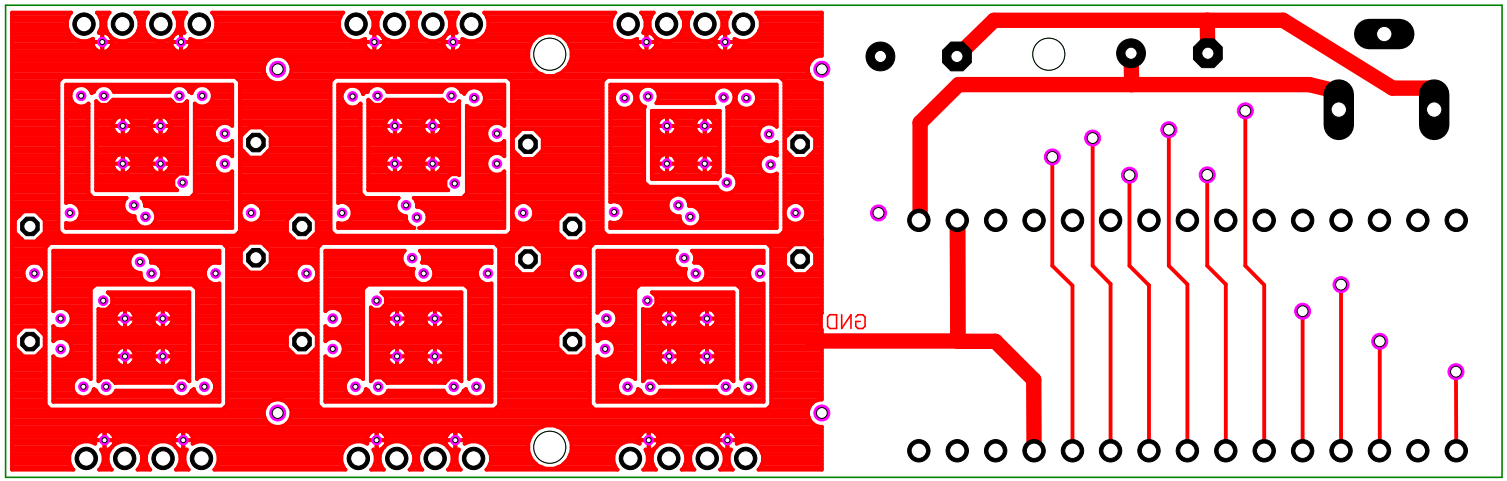
GND