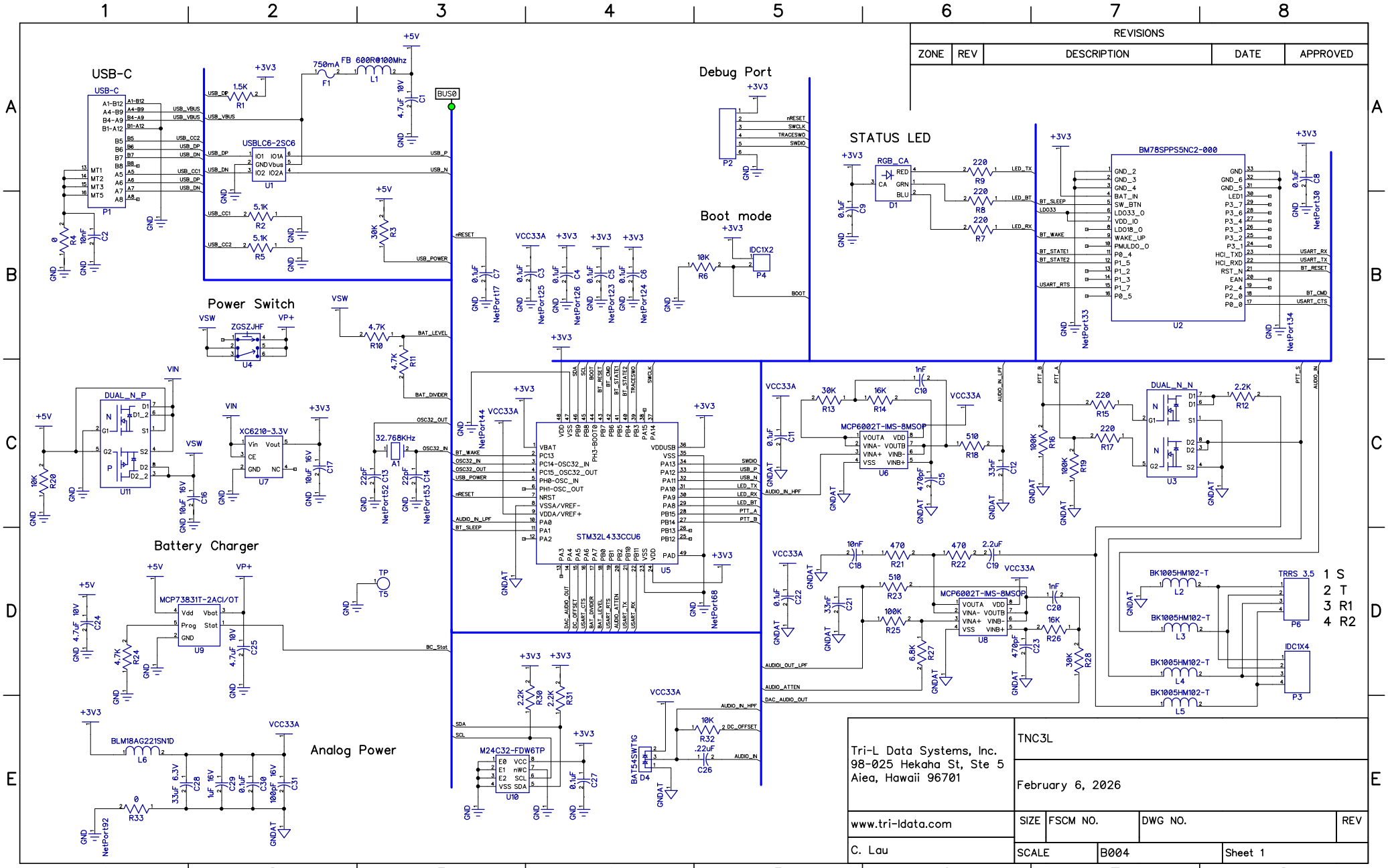
USB-C
Power Switch
Battery Charger
Analog Power
Debug Port
Boot mode
STATUS LED
STM32L433CCU6
BM78SPPS5NC2-000
MCP6002T-IMS-8MSOP
TRRS 3.5
1 S
2 T
3 R1
4 R2
Tri-L Data Systems, Inc.
98-025 Hekaha St, Ste 5
Aiea, Hawaii 96701
www.tri-ldata.com
C. Lau
TNC3L
February 6, 2026
SIZE
FSCM NO.
DWG NO.
REV
SCALE
B004
Sheet 1
REVISIONS
ZONE
REV
DESCRIPTION
DATE
APPROVED

REVISIONS				
ZONE	REV	DESCRIPTION	DATE	APPROVED

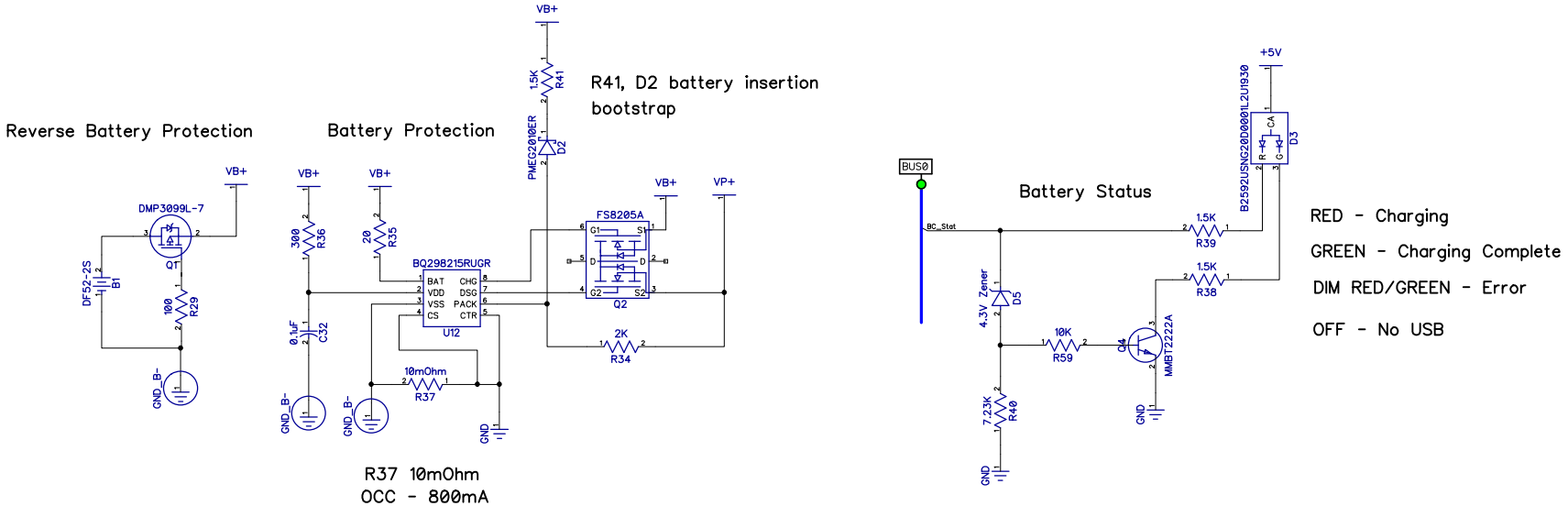

Tri-L Data Systems, Inc. 98-025 Hekaha St, Ste 5 Aiea, Hawaii 96701	TNC3L - Battery Protection & Battery Status
	February 6, 2026
www.tri-ldata.com	SIZE / FSCM NO. / DWG NO. / REV
C. Lau	SCALE / B004 / Sheet 2