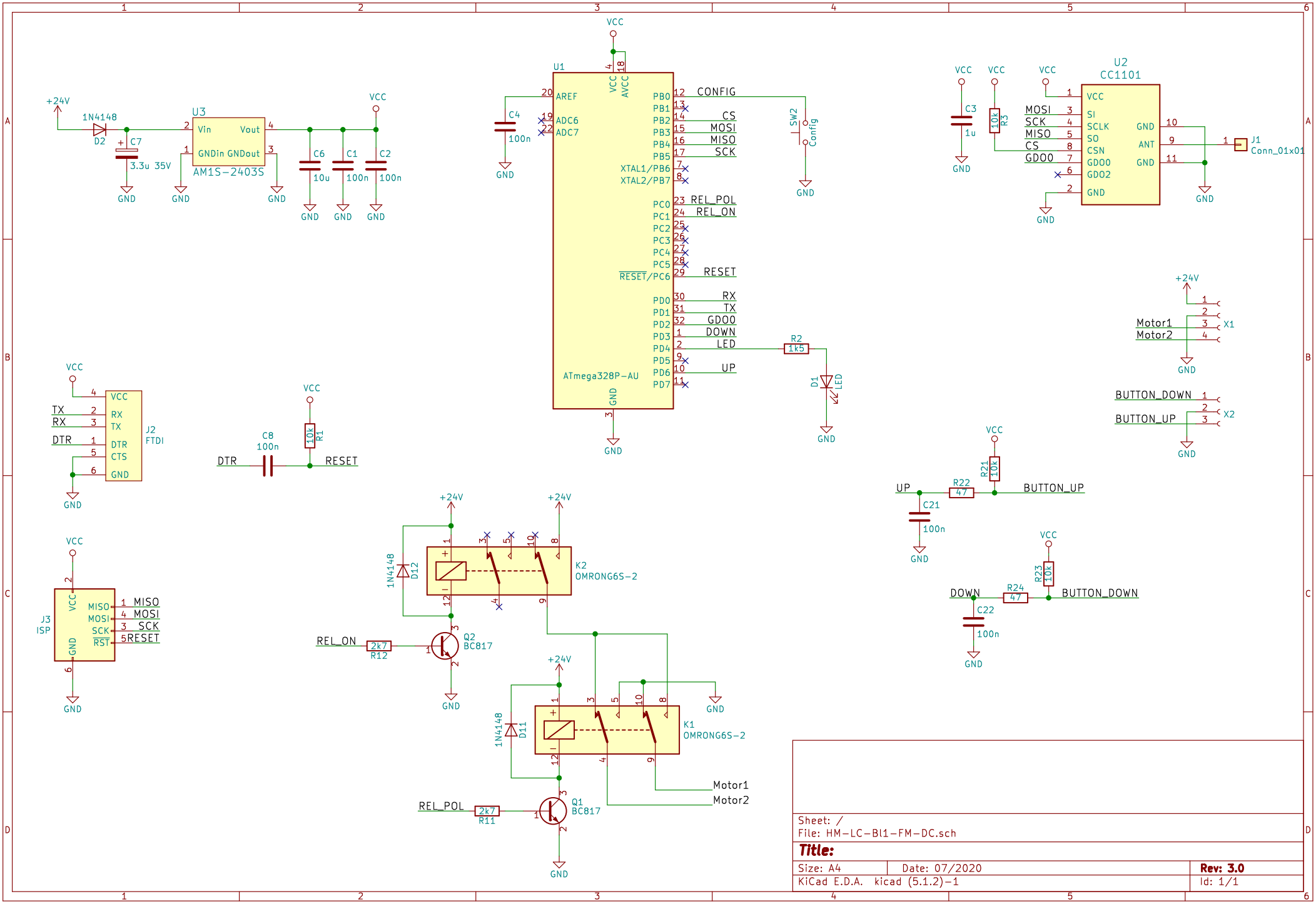

Sheet: /
File: HM-LC-Bl1-FM-DC.sch

Title:

Size: A4	Date: 07/2020	**Rev: 3.0**
KiCad E.D.A. kicad (5.1.2)-1		Id: 1/1