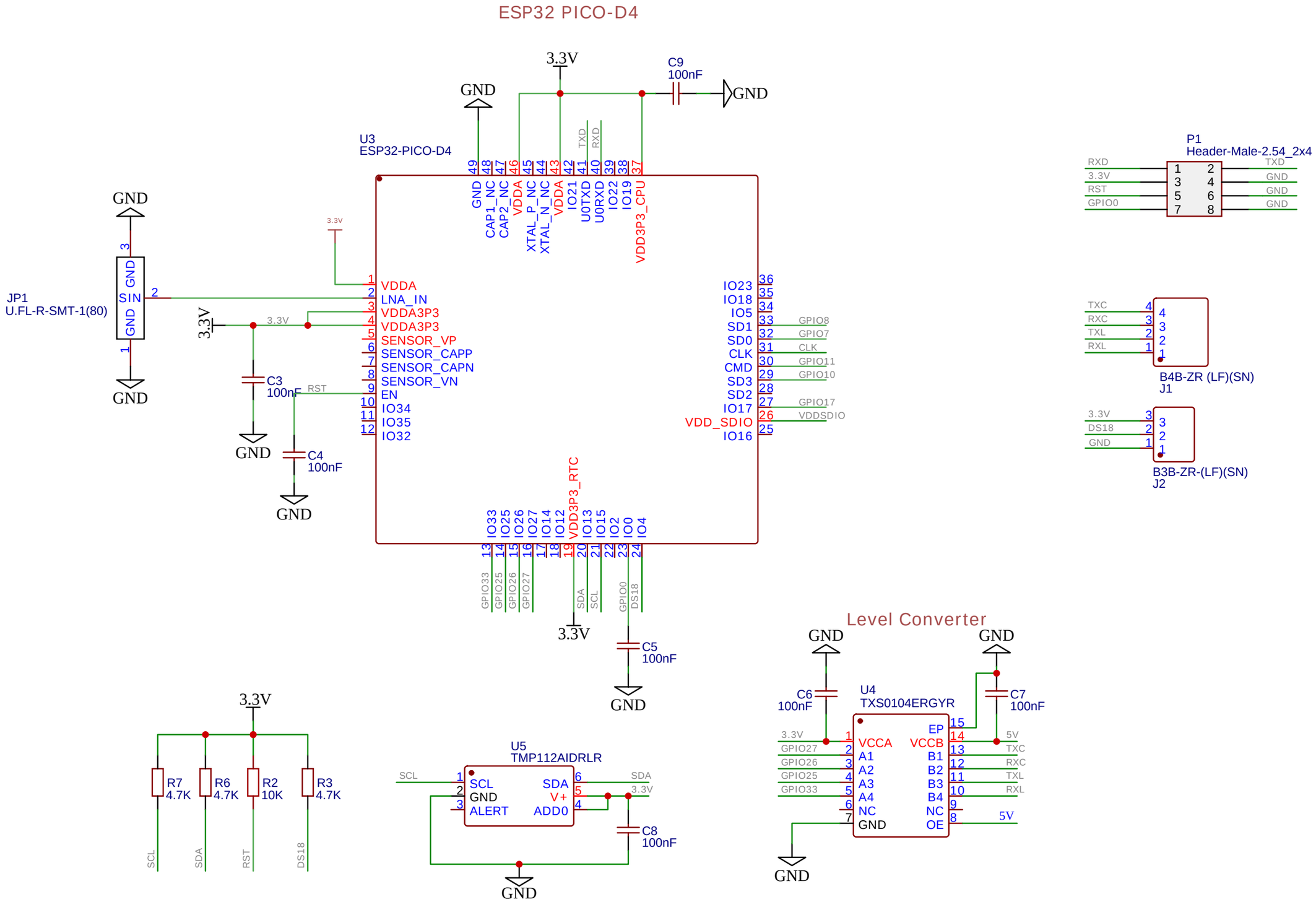

TITLE: Sheet_1	REV: 1.0
Company: Your Company	Sheet: 1/1
Date: 2020-01-01 Drawn By: MSpider65	

DC-DC Step Down 30-60V to 5V

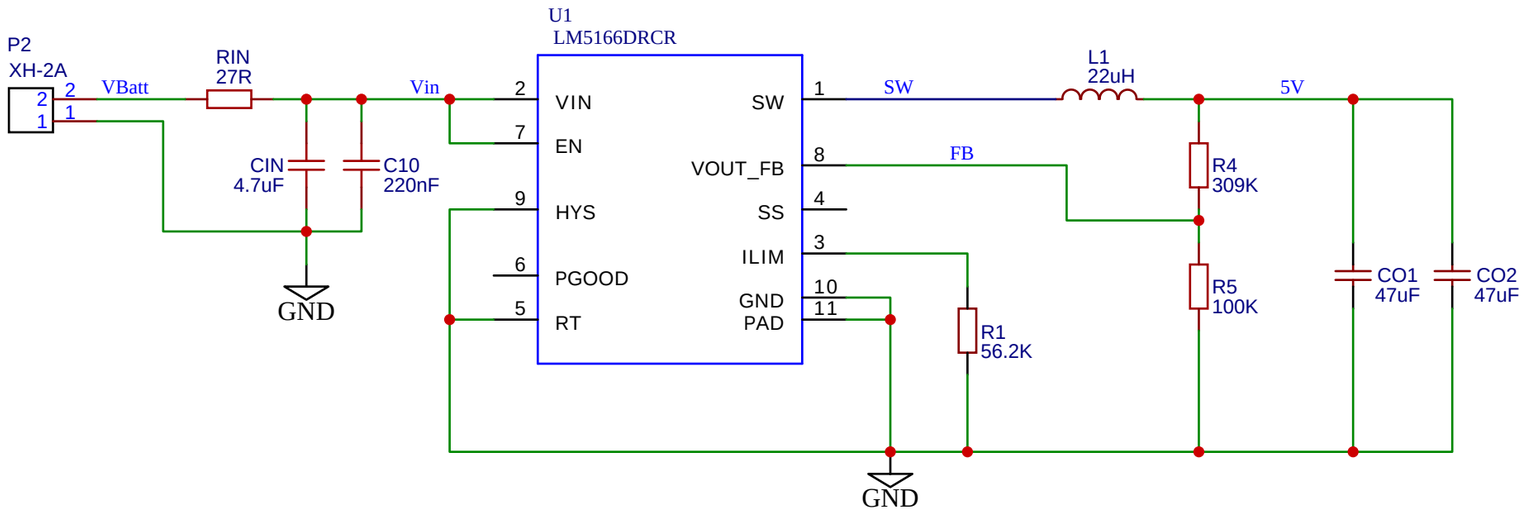

5V to 3.3V LDO

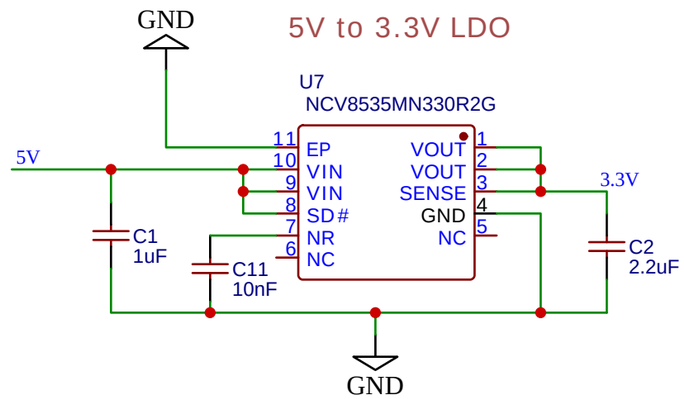

TITLE: Sheet_2		REV: 1.0
EasyEDA	Company: Your Company	Sheet: 1/1
	Date: 2020-01-01 Drawn By: MSpider65	