4.4.1 Les schémas

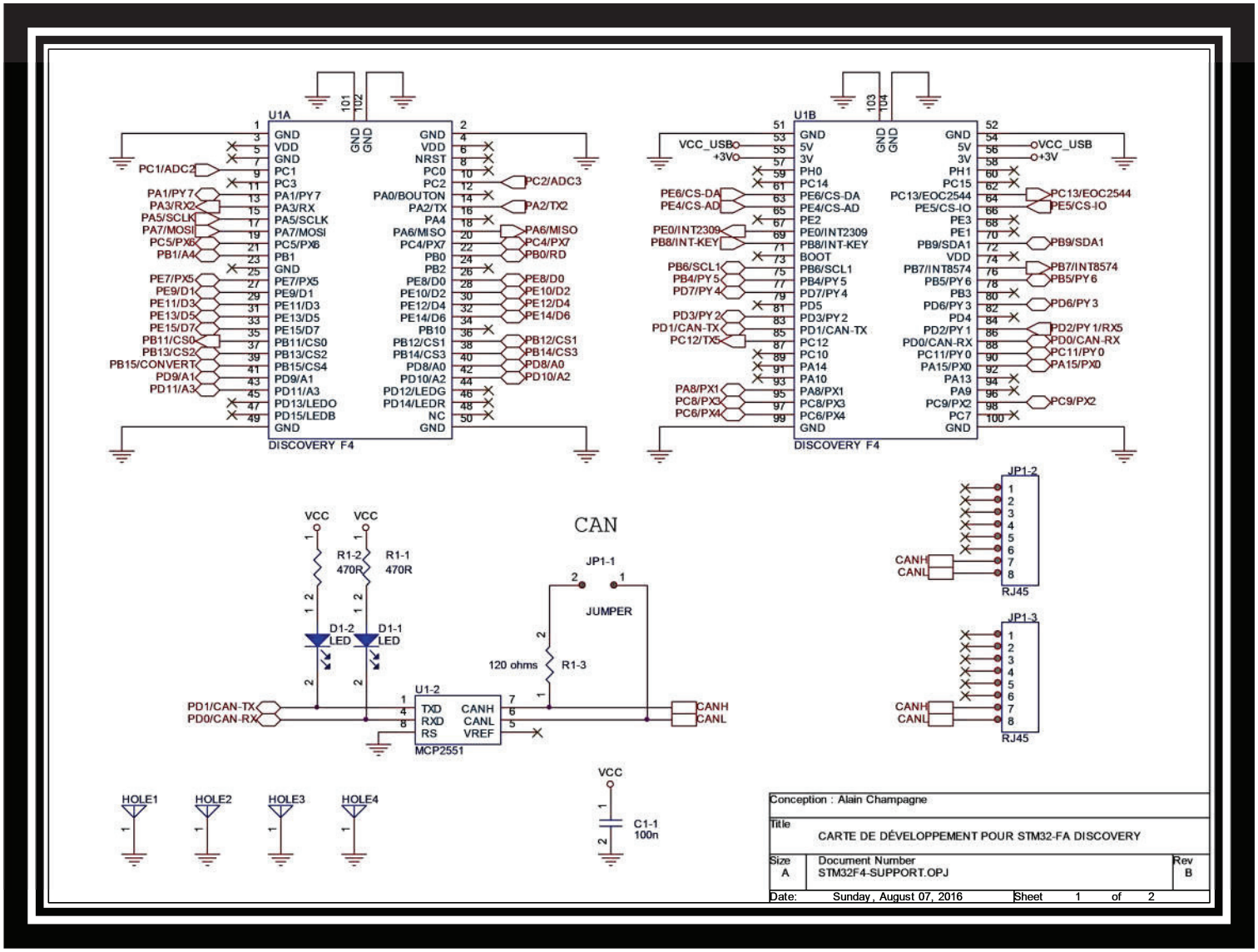

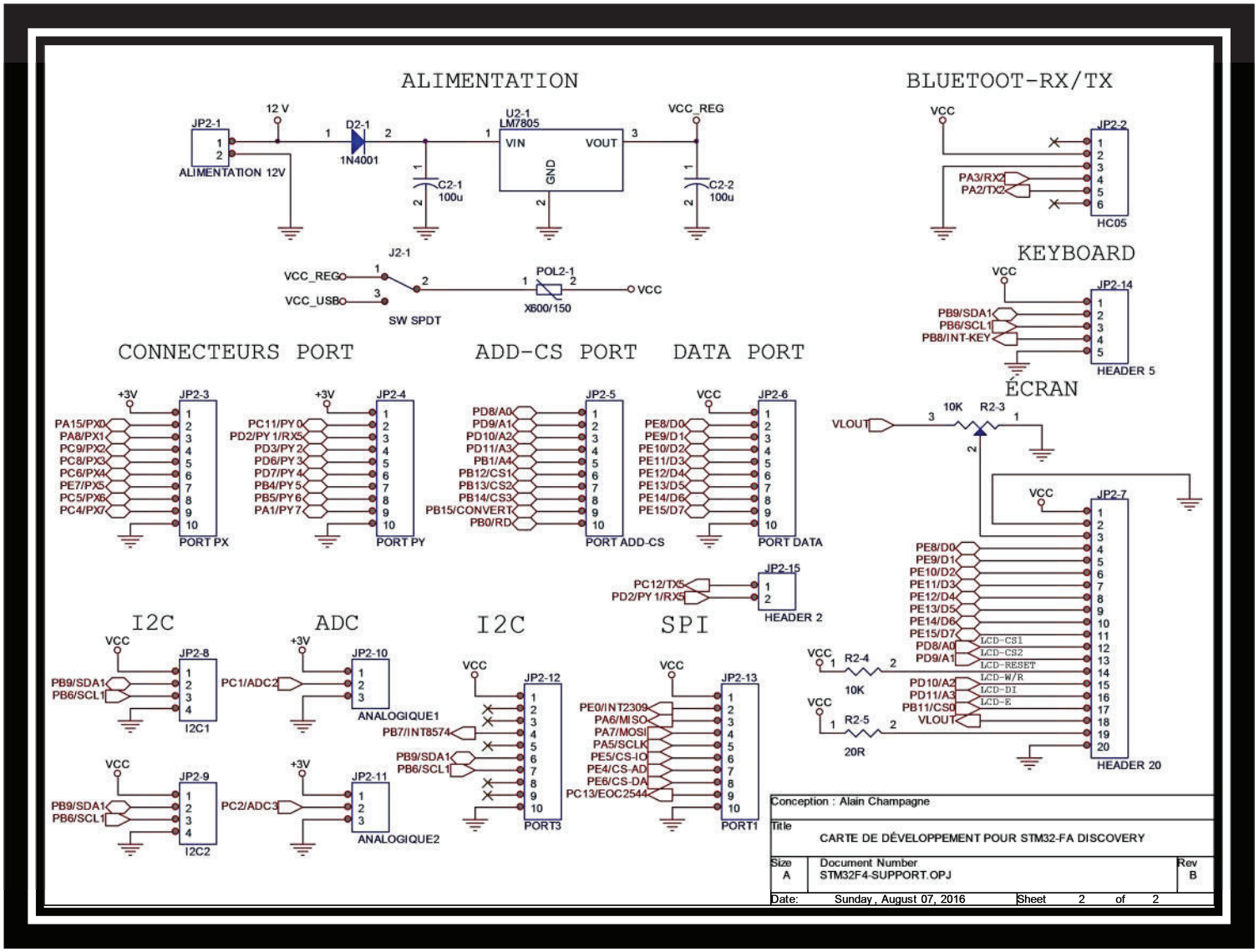
ALIMENTATION
12 V
JP2-1
ALIMENTATION 12V
D2-1
1N4001
C2-1
100u
U2-1
LM7805
VIN
VOUT
GND
VCC_REG
C2-2
100u
J2-1
VCC_REG
VCC_USB
SW SPDT
POL2-1
X600/150
VCC
BLUETOOT-RX/TX
VCC
JP2-2
PA3/RX2
PA2/TX2
HC05
KEYBOARD
VCC
JP2-14
PB9/SDA1
PB6/SCL1
PB8/INT-KEY
HEADER 5
CONNECTEURS PORT
ADD-CS PORT
DATA PORT
+3V
JP2-3
PA15/PX0
PA8/PX1
PC9/PX2
PC8/PX3
PC6/PX4
PE7/PX5
PC5/PX6
PC4/PX7
PORT PX
JP2-4
PC11/PY0
PD2/PY1/RX5
PD3/PY2
PD6/PY3
PD7/PY4
PB4/PY5
PB5/PY6
PA1/PY7
PORT PY
JP2-5
PD8/A0
PD9/A1
PD10/A2
PD11/A3
PB1/A4
PB12/CS1
PB13/CS2
PB14/CS3
PB15/CONVERT
PB0/RD
PORT ADD-CS
JP2-6
PE8/D0
PE9/D1
PE10/D2
PE11/D3
PE12/D4
PE13/D5
PE14/D6
PE15/D7
PORT DATA
ÉCRAN
VLOUT
10K
R2-3
JP2-7
PE8/D0
PE9/D1
PE10/D2
PE11/D3
PE12/D4
PE13/D5
PE14/D6
PE15/D7
PD8/A0
PD9/A1
LCD-CS1
LCD-CS2
LCD-RESET
PD10/A2
PD11/A3
PB11/CS0
LCD-W/R
LCD-DI
LCD-E
VLOUT
R2-4
10K
R2-5
20R
HEADER 20
JP2-15
PC12/TX5
PD2/PY1/RX5
HEADER 2
I2C
JP2-8
PB9/SDA1
PB6/SCL1
I2C1
JP2-9
PB9/SDA1
PB6/SCL1
I2C2
ADC
JP2-10
PC1/ADC2
ANALOGIQUE1
JP2-11
PC2/ADC3
ANALOGIQUE2
I2C
JP2-12
PB7/INT8574
PB9/SDA1
PB6/SCL1
PORT3
SPI
JP2-13
PE0/INT2309
PA6/MISO
PA7/MOSI
PA5/SCLK
PE5/CS-IO
PE4/CS-AD
PE6/CS-DA
PC13/EOC2544
PORT1
Conception : Alain Champagne
Title
CARTE DE DÉVELOPPEMENT POUR STM32-FA DISCOVERY
Size
A
Document Number
STM32F4-SUPPORT.OPJ
Rev
B
Date: Sunday, August 07, 2016
Sheet 2 of 2