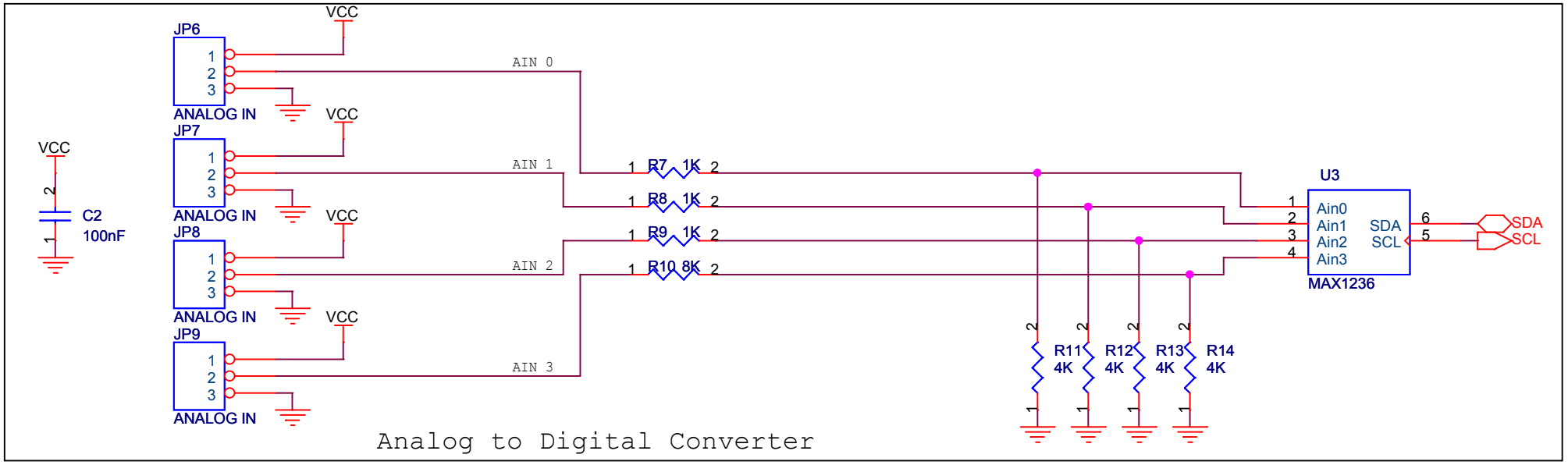


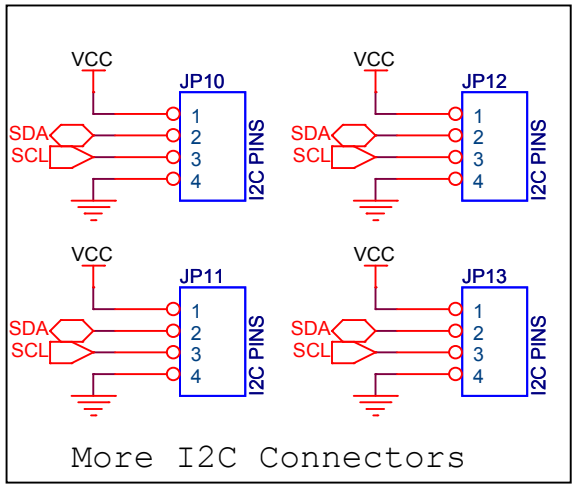


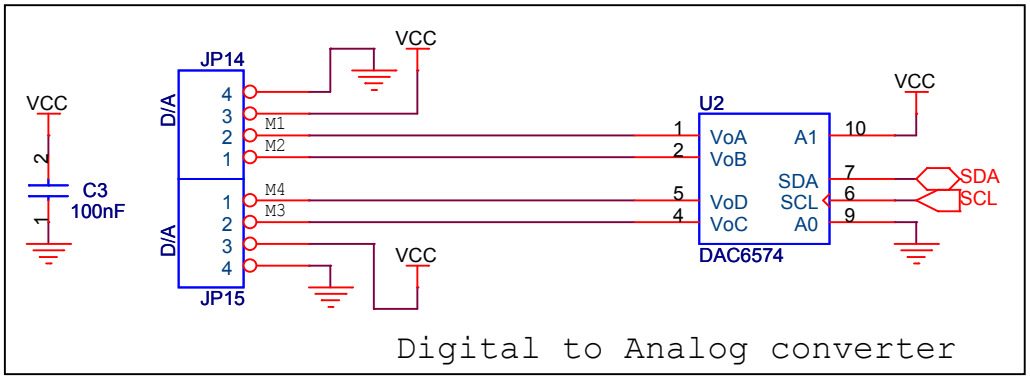


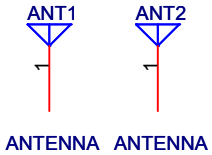


| U? | VCC | GND |
|---|---|---|
| U2 | 8 | 3 |
| U3 | 8 | 7 |

Concepteur: Vincent Chouinard

Title: Carte I2C

Size: A

Document Number: CARTEI2C.DSN

Rev: A

Date: Thursday, March 06, 2014

Sheet 2 of 2