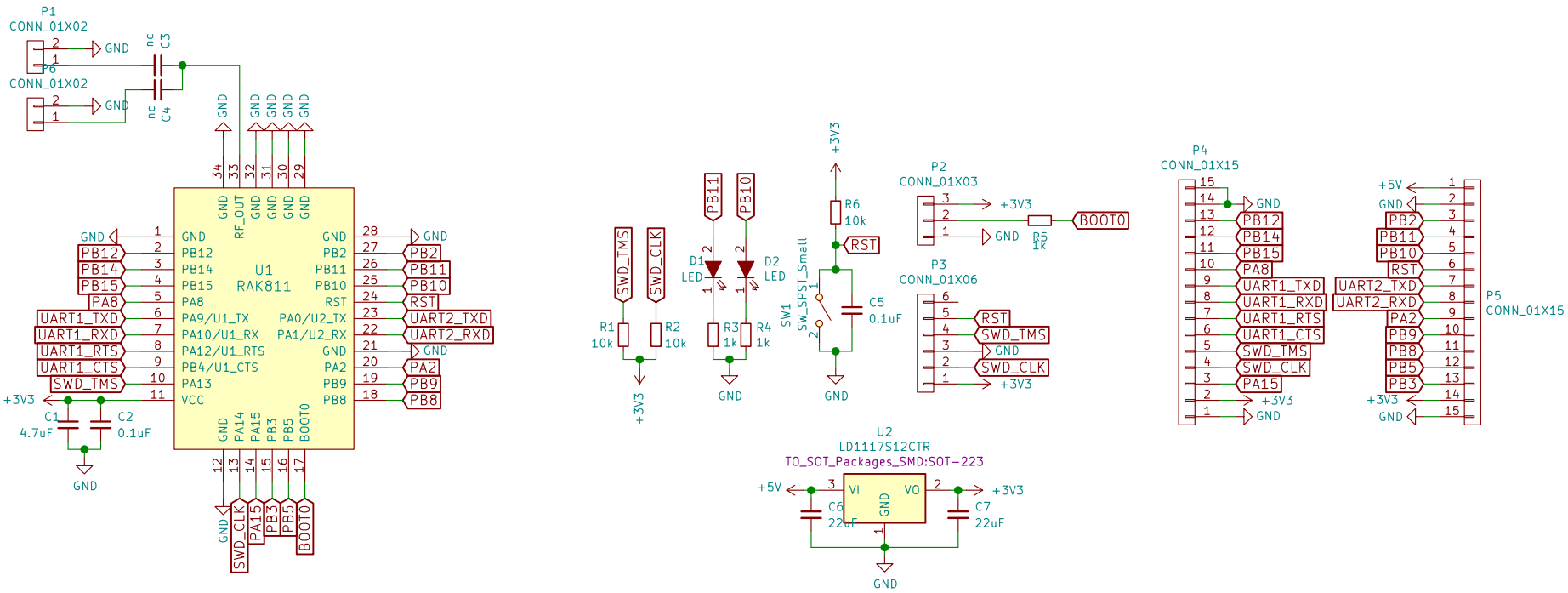

Benjamin Marty

Sheet: /

File: RAK811.sch

Title: RAK811 Breakout

Size: A4	Date:	**Rev: V01**
KiCad E.D.A. kicad no-vcs-found-undefined		Id: 1/1