NOTES:

1.Insulation: LCP+30% G.F UL94V-0, Color Black
2.Contact : Phosphor Bronze
3.Plating : Selective 30µ" Gold over 50µ" Nickel
4.Shell : Phosphor Bronze
5.Shell Plating: 100µ" Tin over 80µ" Nickel
③ 6.Temperature range: -40°C~+60°C
④ Packing: Tube

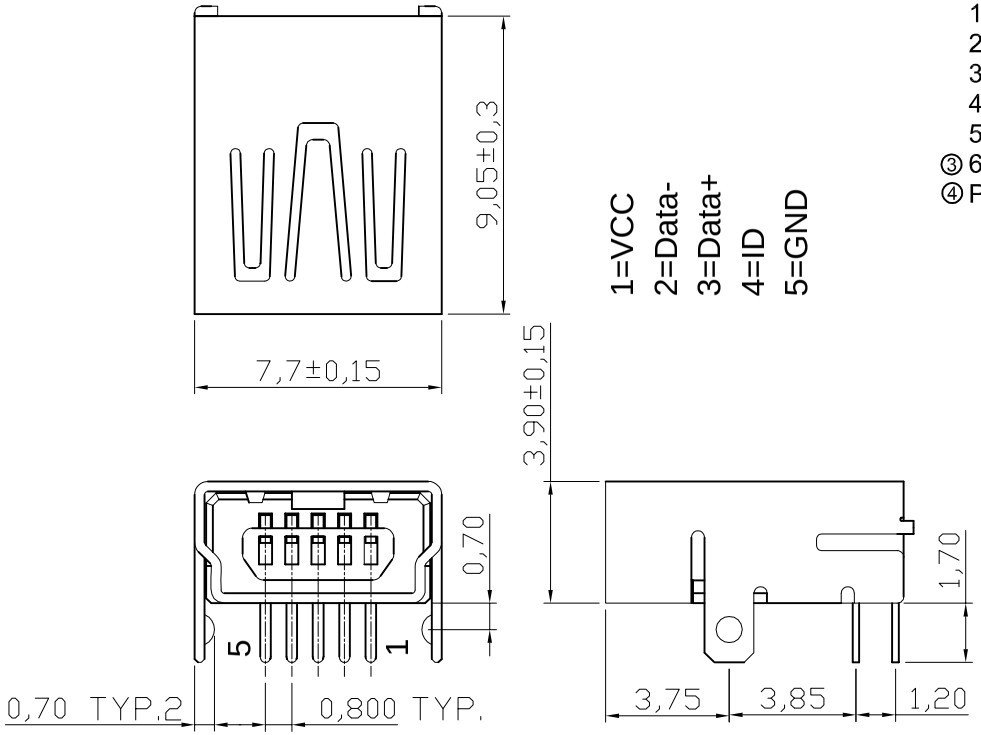

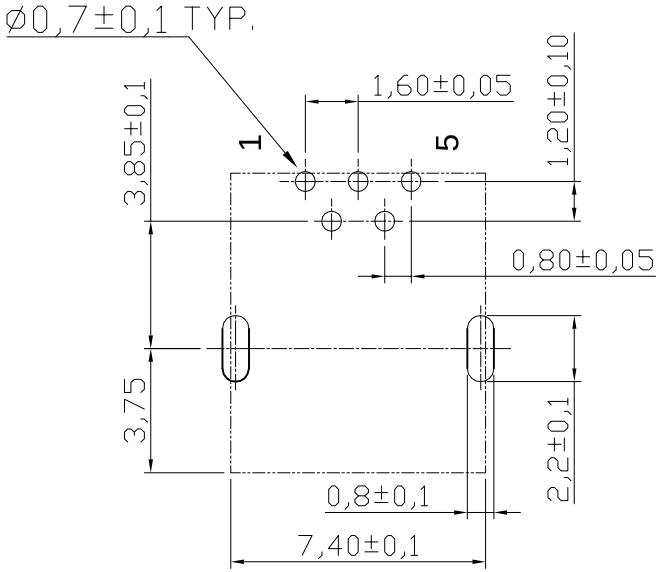

Recommended PCB Layout

RoHS compliant

Scale	1:1
TOLERANCE	
.X	±0.30
.XX	±0.20
.XXX	±0.10
DIM	TOL
X.°	±1°
Angle	TOL
UNIT	mm

Id.	Modification	Date	Name
④	Add the Packing	04.06.2013	Winnie
③	Temperature range add in	24.07.2012	Lucas
②	Modify drawing	07.07.2009	Dean
①	Drawn	03.07.2003	Hellwig

	Date	Name
Drawn	03.07.2003	Hellwig
Approved	04.06.2013	Winnie

ASSMANN WSW components

Customer-No.

ASSMANN WSW-No.
A-USB B-M5-C

Drawing-No.
ASS 1455 CO

rev04

Replace

SHEET