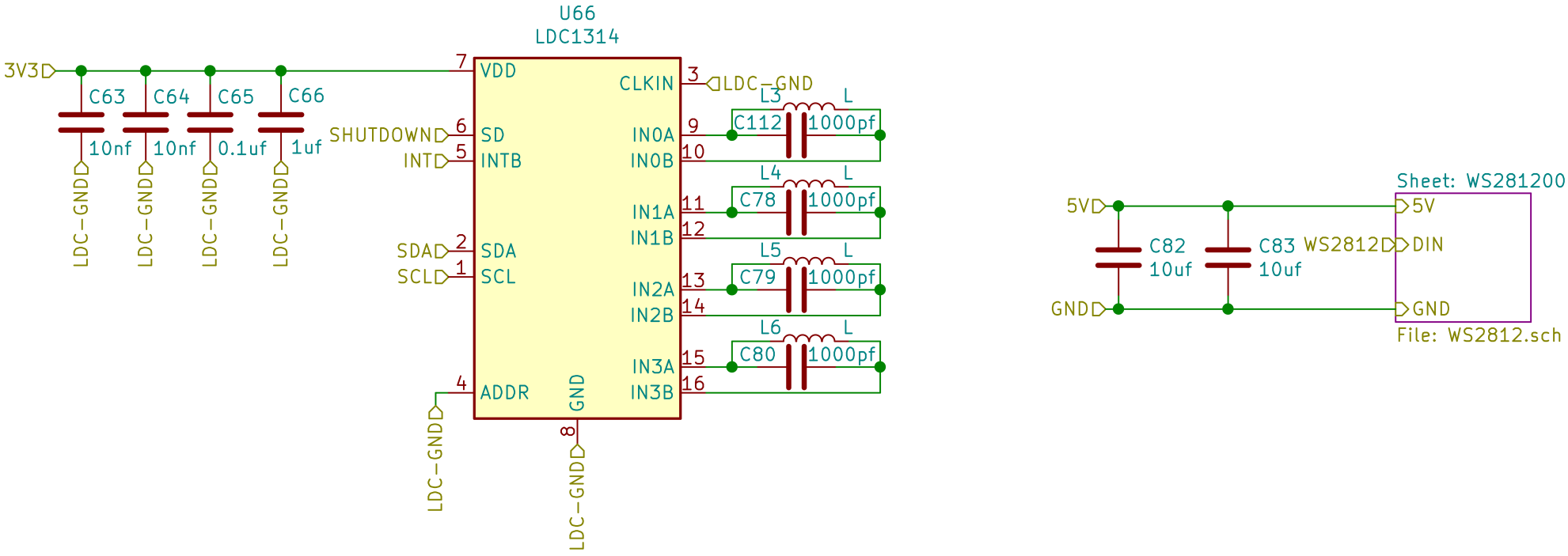
U66
LDC1314
3V3
C63
C64
C65
C66
10nf
10nf
0.1uf
1uf
LDC-GND
LDC-GND
LDC-GND
LDC-GND
7
VDD
SHUTDOWN
6
SD
INT
5
INTB
SDA
2
SDA
SCL
1
SCL
4
ADDR
GND
8
LDC-GND
LDC-GND
CLKIN
3
LDC-GND
IN0A
9
IN0B
10
IN1A
11
IN1B
12
IN2A
13
IN2B
14
IN3A
15
IN3B
16
L3
L
C112
1000pf
L4
L
C78
1000pf
L5
L
C79
1000pf
L6
L
C80
1000pf
5V
GND
C82
10uf
C83
10uf
WS2812
Sheet: WS281200
5V
DIN
GND
File: WS2812.sch