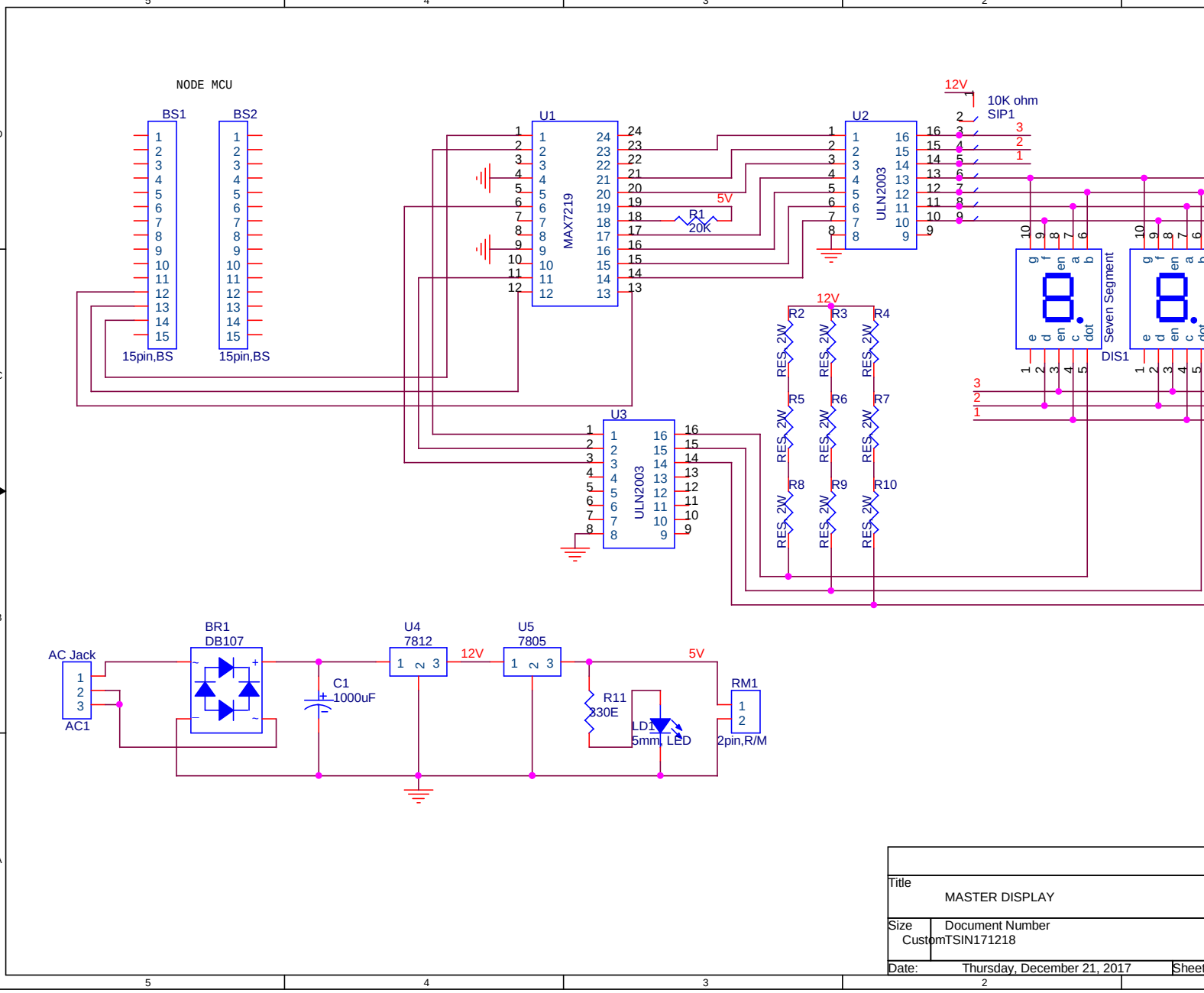

Title	MASTER DISPLAY
Size	Document Number
CustomTSIN171218	
Date:	Thursday, December 21, 2017

Seven Segment
DIS2
Seven Segment
DIS3
Rev
<RevCode>
1 of 1