2459 - Underground Imager

Sabrina Ashik, Tyler Wilson, Joel Tsuchitori, Matthew Hasman

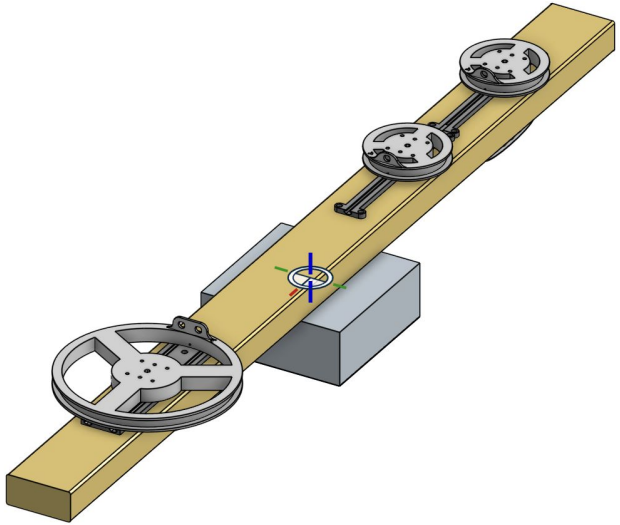

Global UXO Problem

Unexploded Explosive Ordnance (UXO) are military explosives that did not explode or function as intended.

Challenges with Detecting UXOs

- Existing Solutions:

Ground Penetrating Radar (GPR)

Explosive-sniffing dogs

Metal Detector

Challenges with Detecting UXOs

- Existing Solutions:

Ground Penetrating Radar (GPR)

Very Expensive &
Requires special training

Explosive-sniffing dogs

Expensive & Not as effective
for UXO buried deep

Metal Detector

Slow & Labor-Intensive

Why do we need a special instrument for detection?

UXO

VS

Scrap Metal

Faculty Advisor - Dr. Lindsey Heagy

Assistant Professor, Department of Earth, Ocean, and Atmospheric Sciences

Expertise include:

- Geophysical Inversion
- Electromagnetic Methods
- Detection and classification of unexploded ordnance (UXO)

Project Scope

- Measure frequency response of underground conductive objects
- Determine object properties based on their frequency response
    - Object shape
    - Object conductivity
- Detect whether an object is uniaxial or not

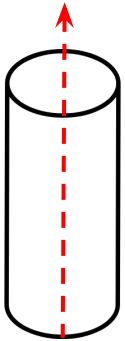

Uniaxial

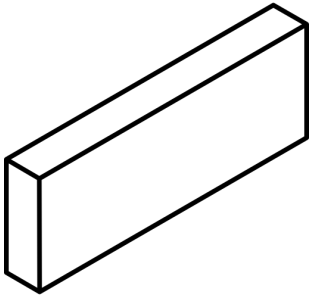

Non-uniaxial

Our Solution

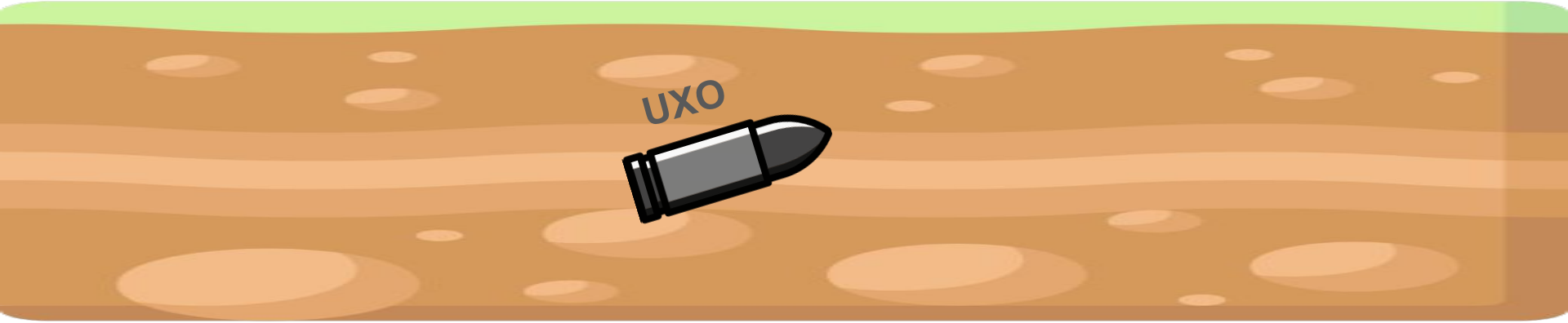

Our Solution

Supply current to transmitting coil to generate a magnetic field

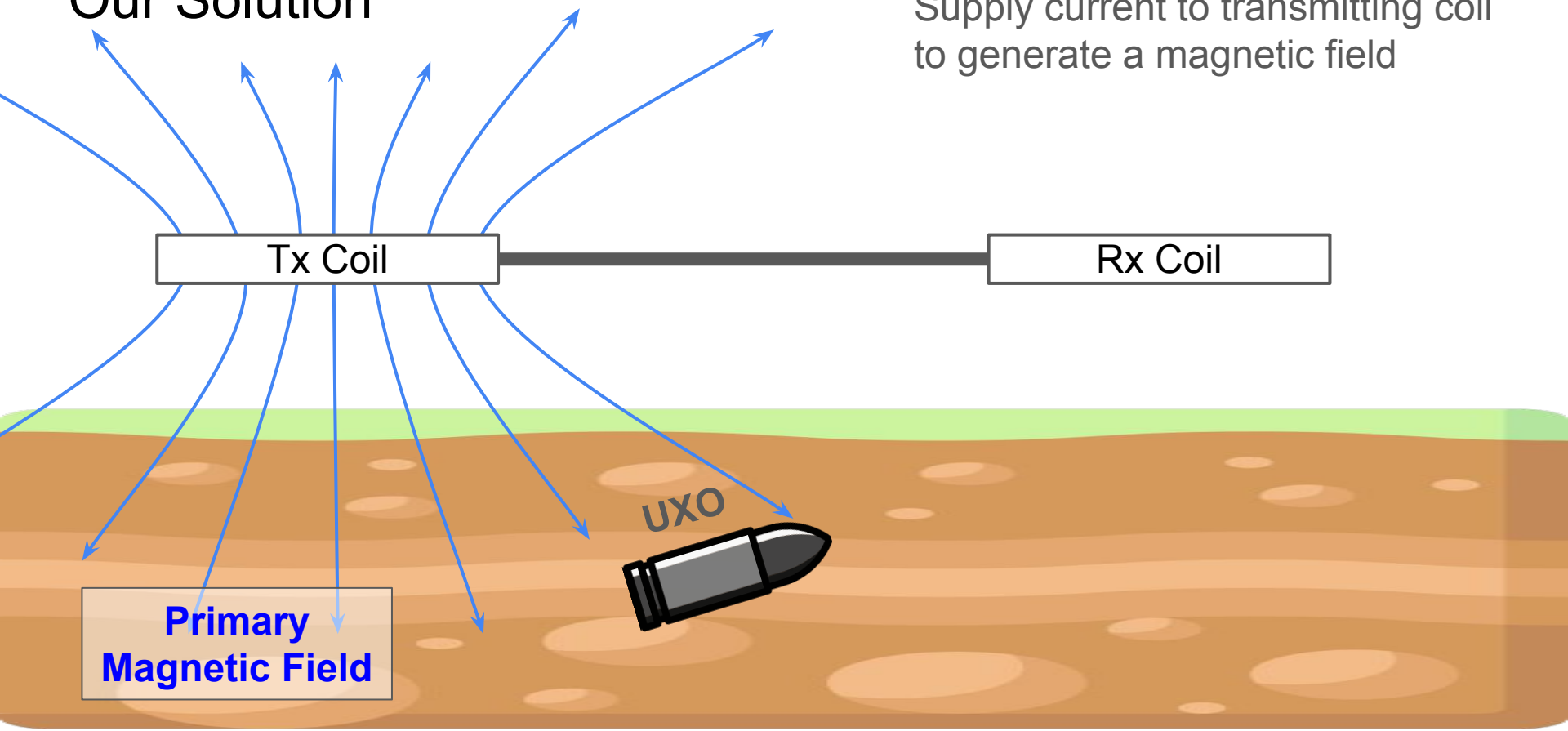

Our Solution

Eddy currents are induced by the primary magnetic field

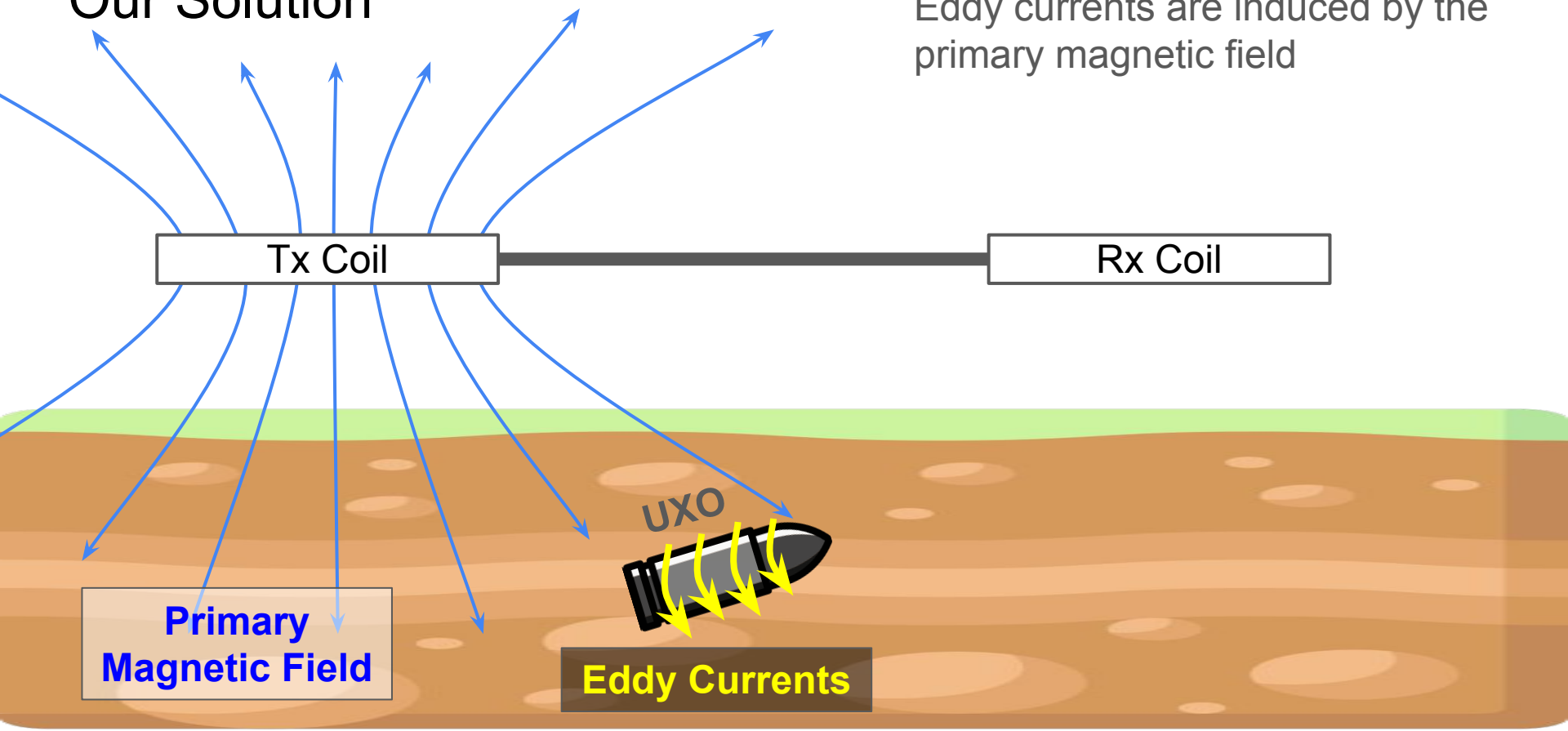

Our Solution

A secondary magnetic field is generated by the eddy currents

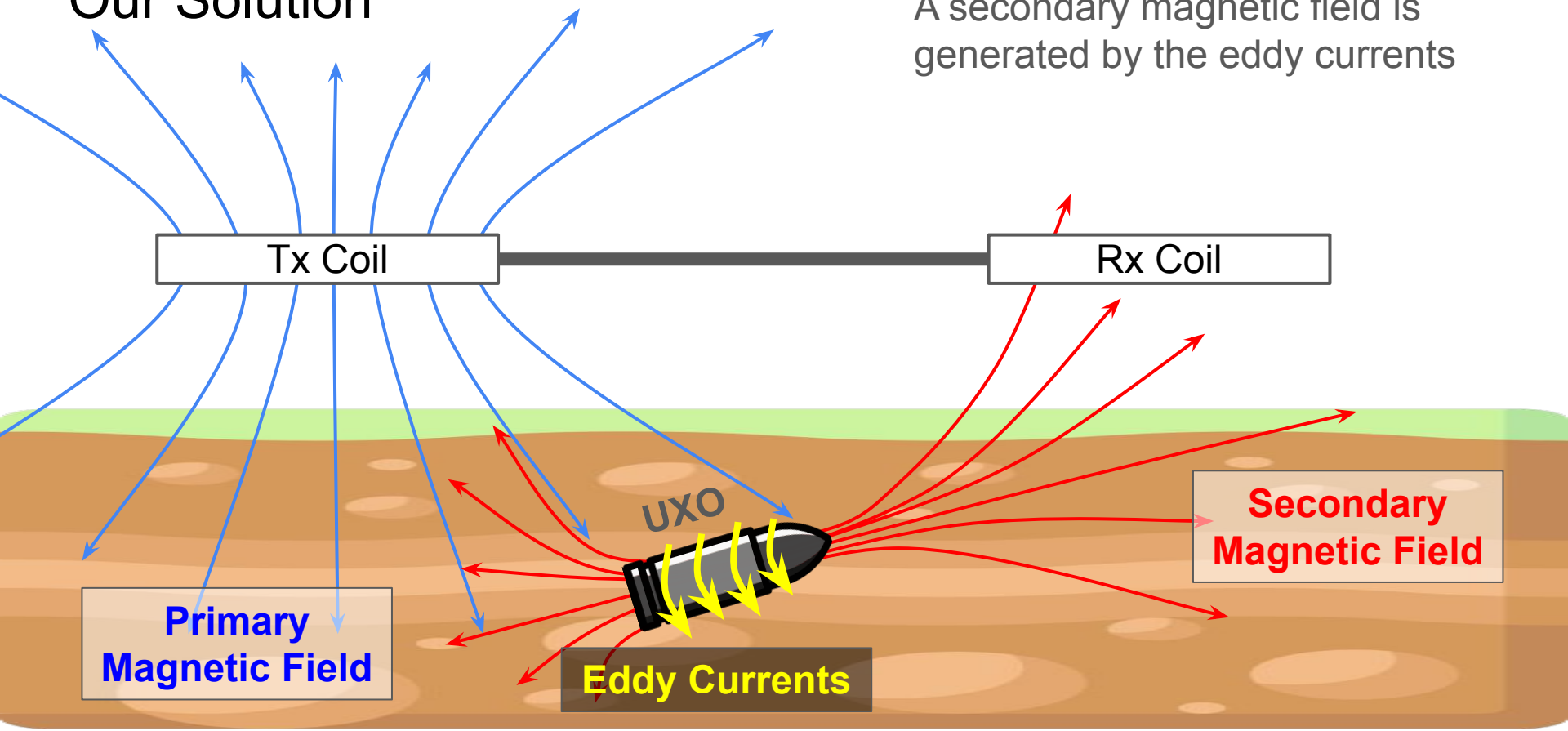

Our Solution

The secondary field will induce a current in the receiving coil which produces a voltage

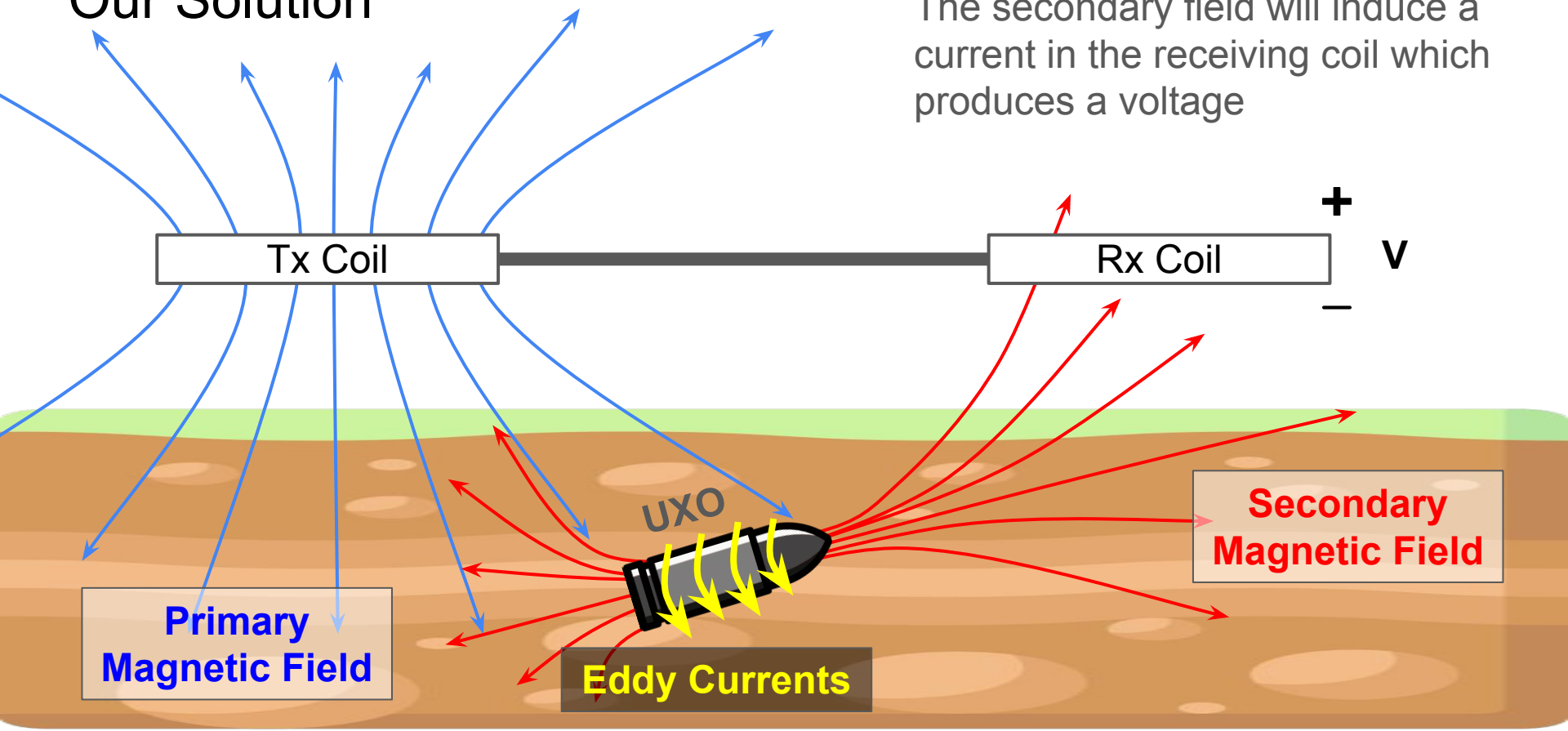

System-Level Diagram

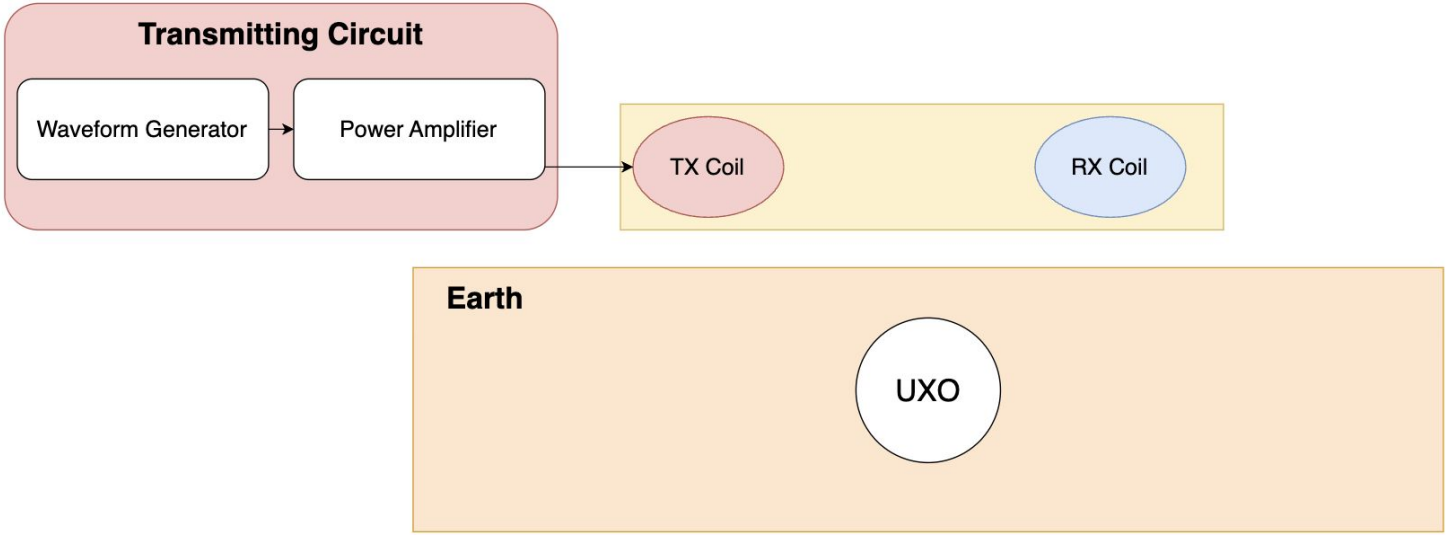

System-Level Diagram

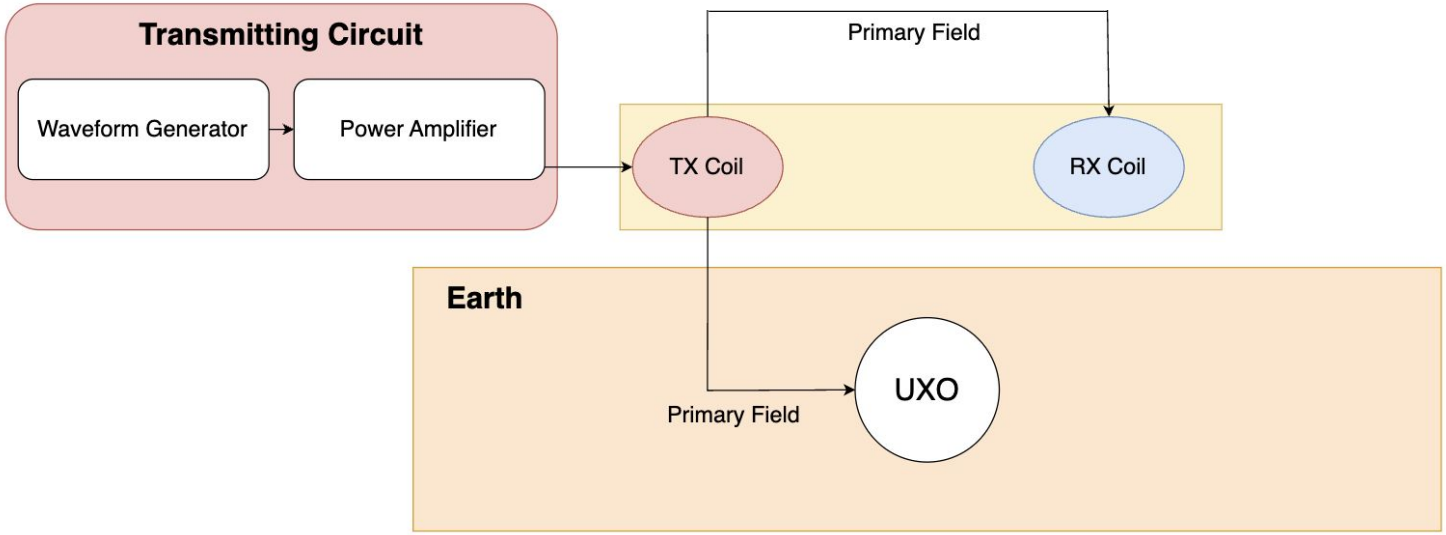

System-Level Diagram

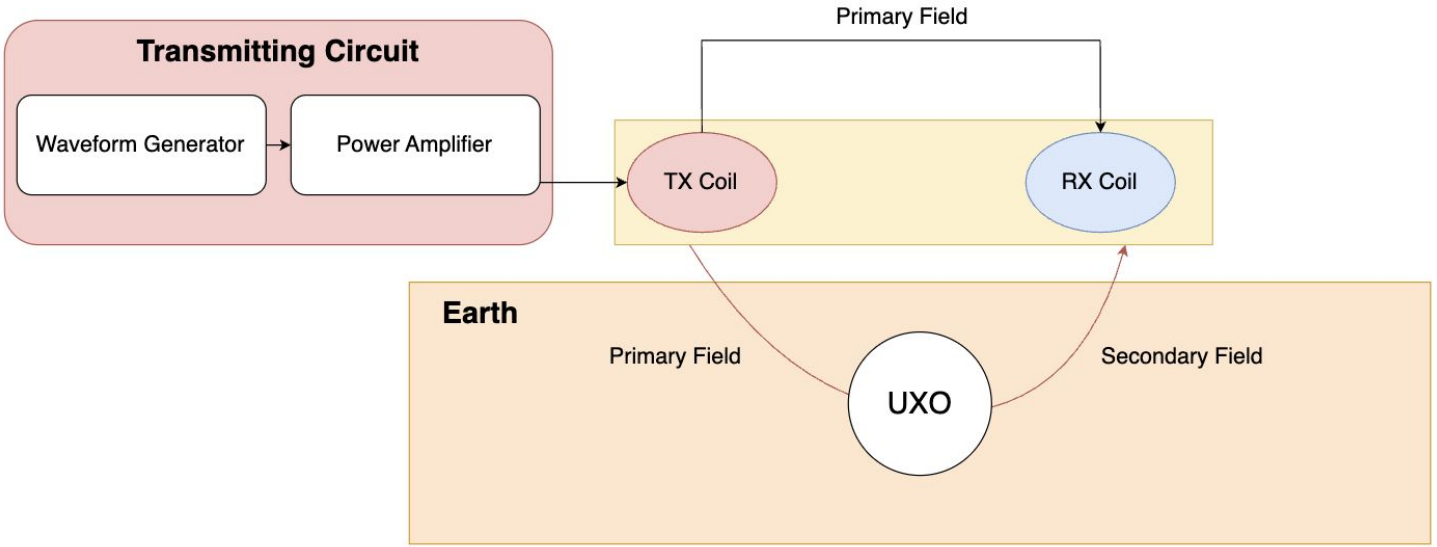

System-Level Diagram

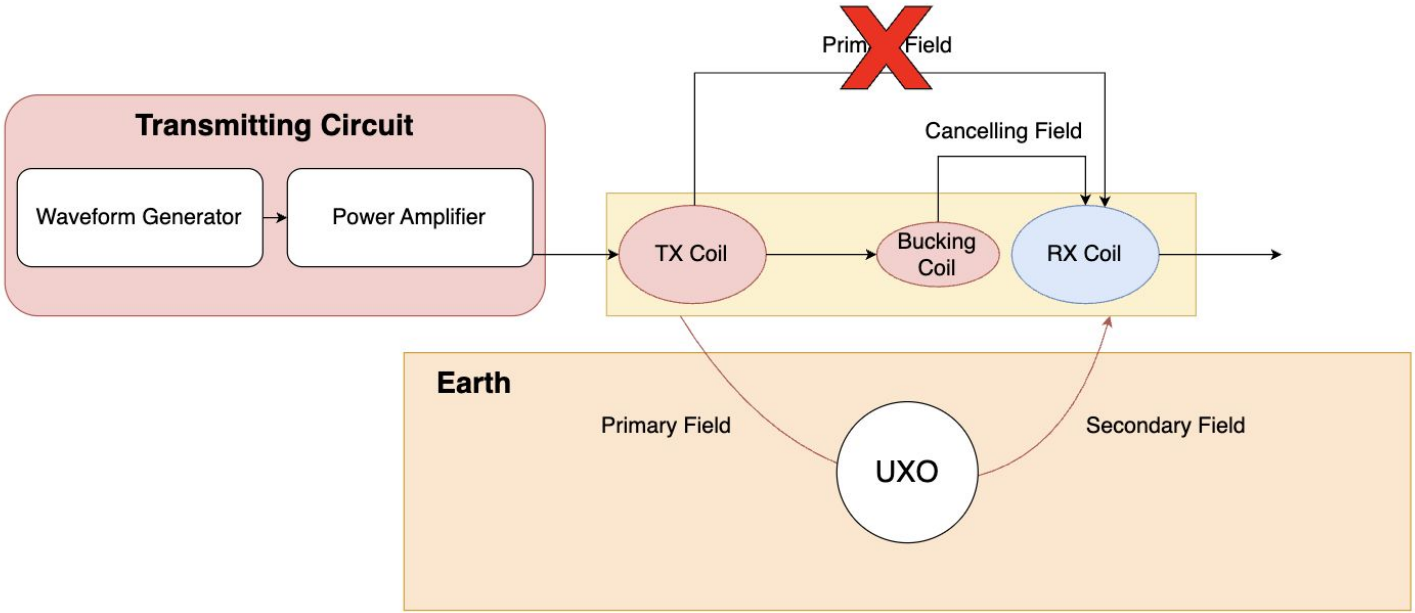

System-Level Diagram

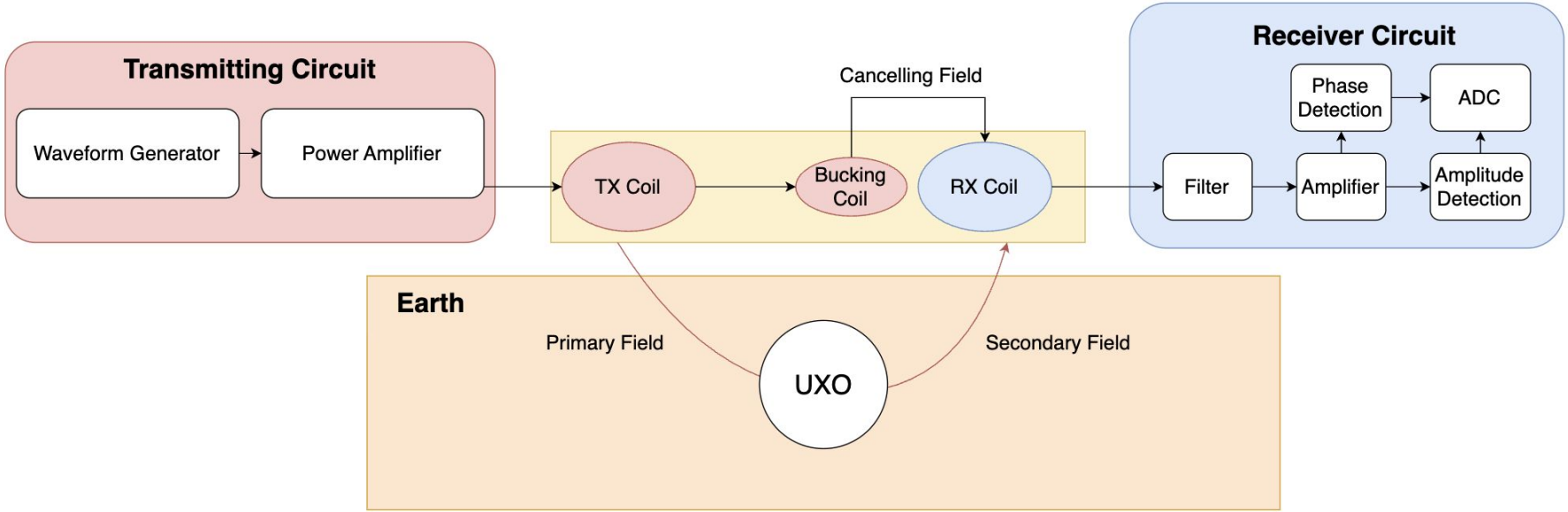

System-Level Diagram

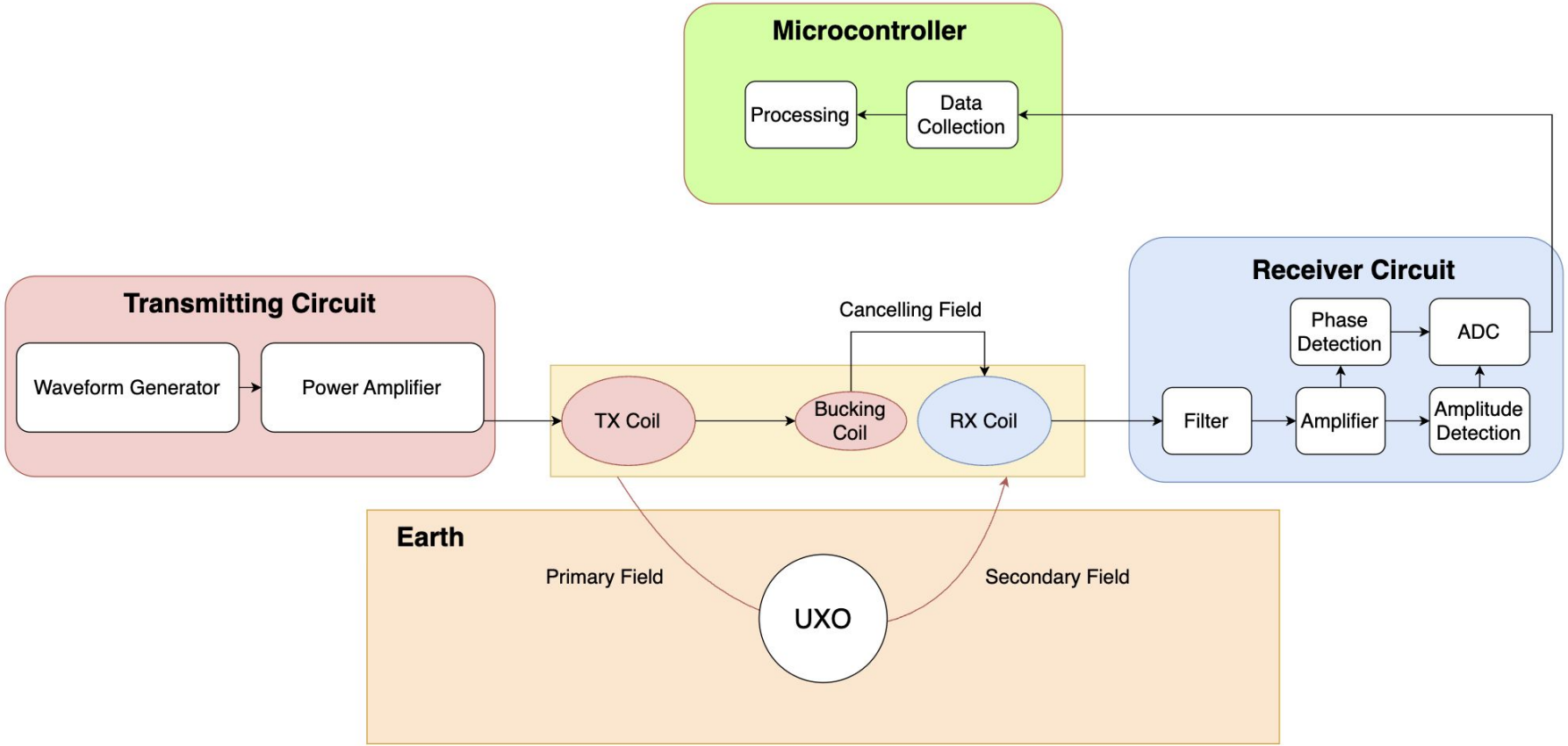

System-Level Diagram

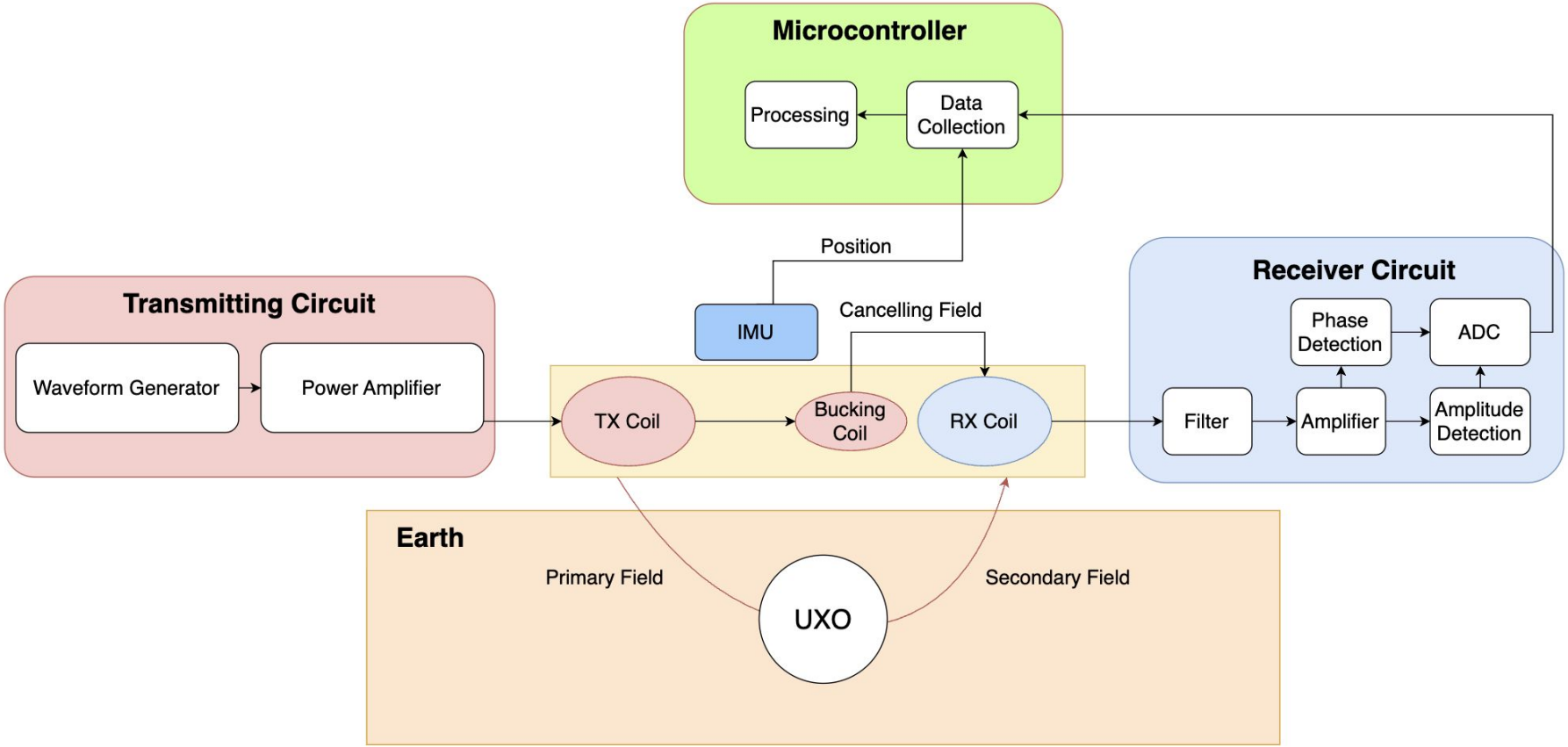

System-Level Diagram

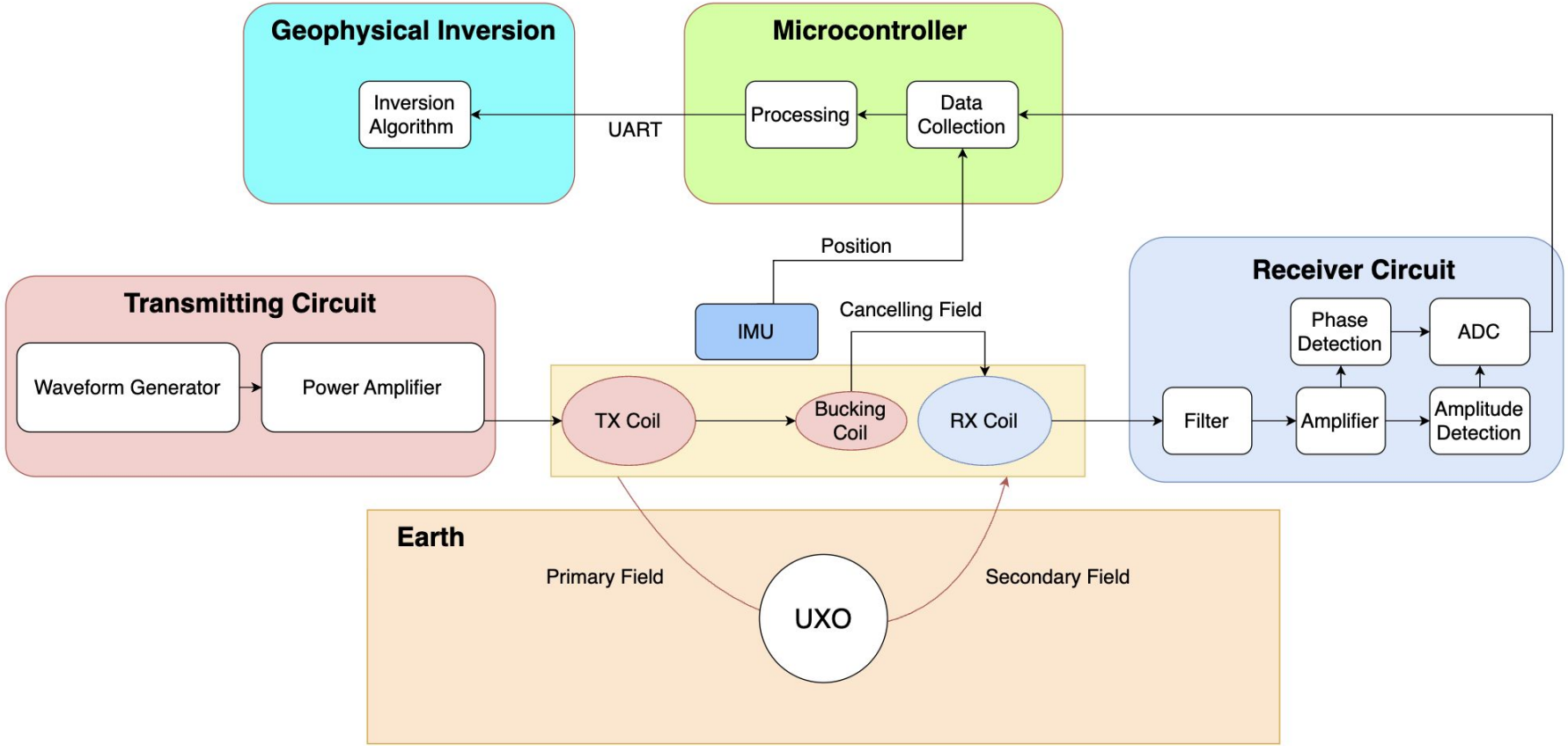

System-Level Diagram

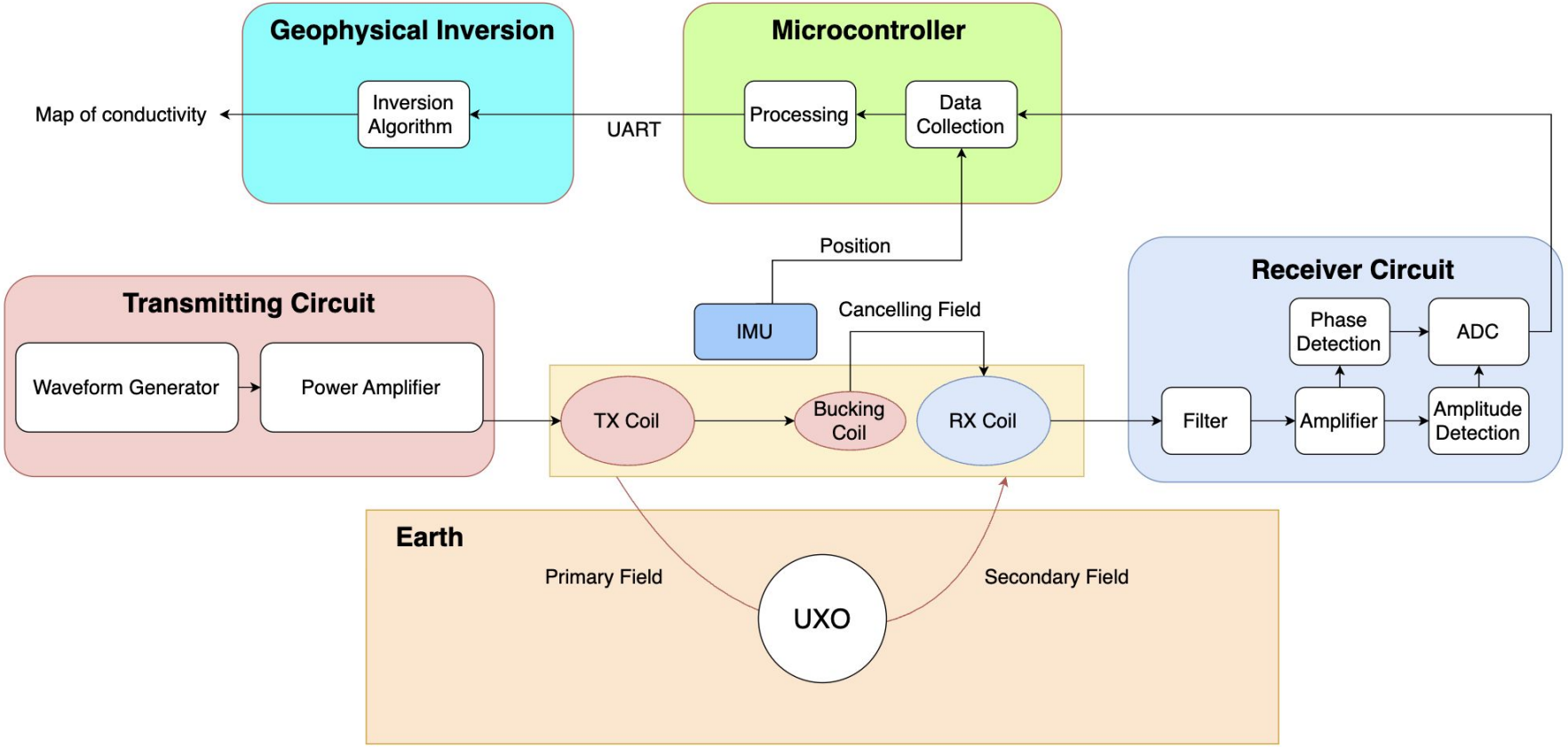

Hardware: Two-Coil System

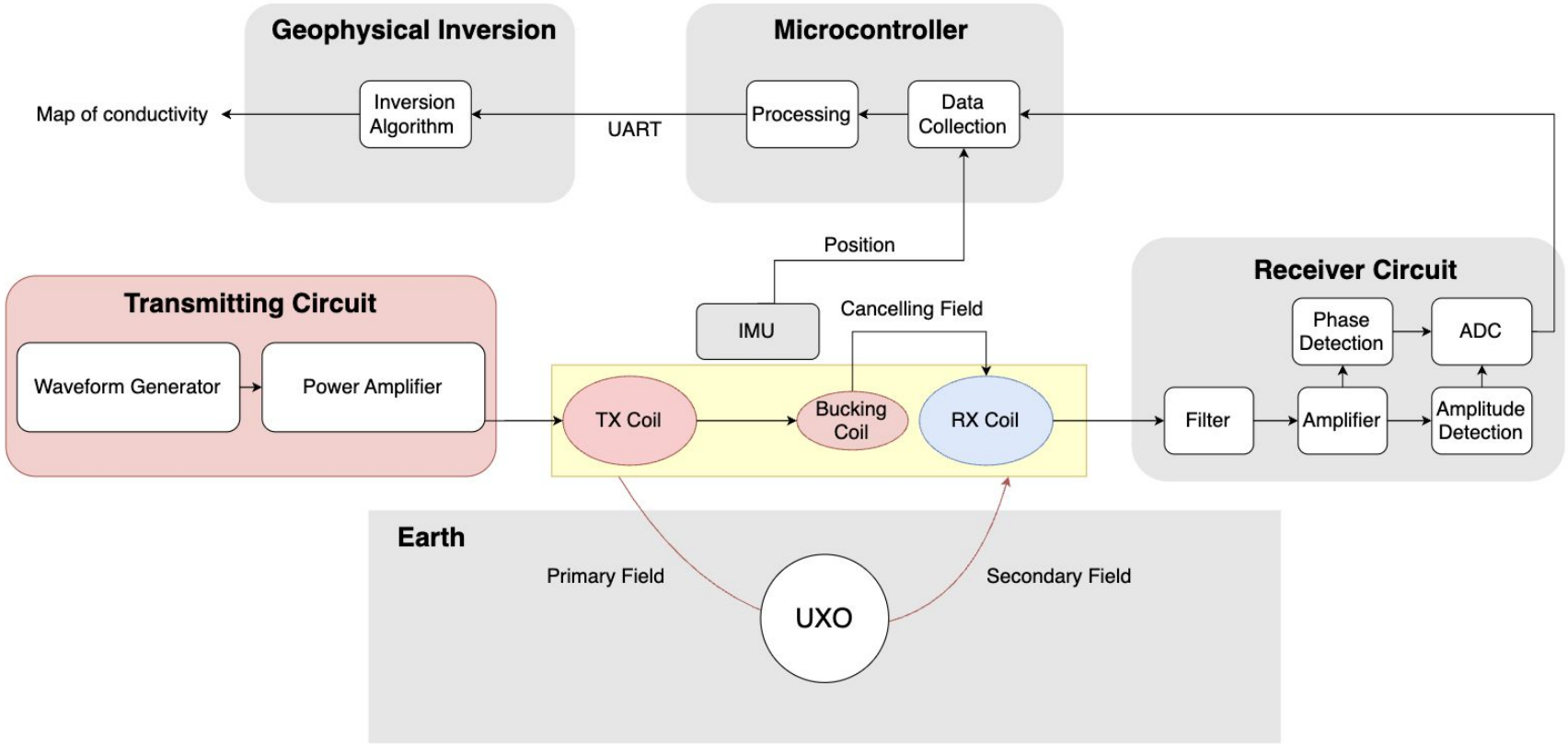

Coil System Overview

Design Considerations:

- Minimize Conductive Materials
- Portable
- Minimize Losses and Parasitics
- **System is well characterized**

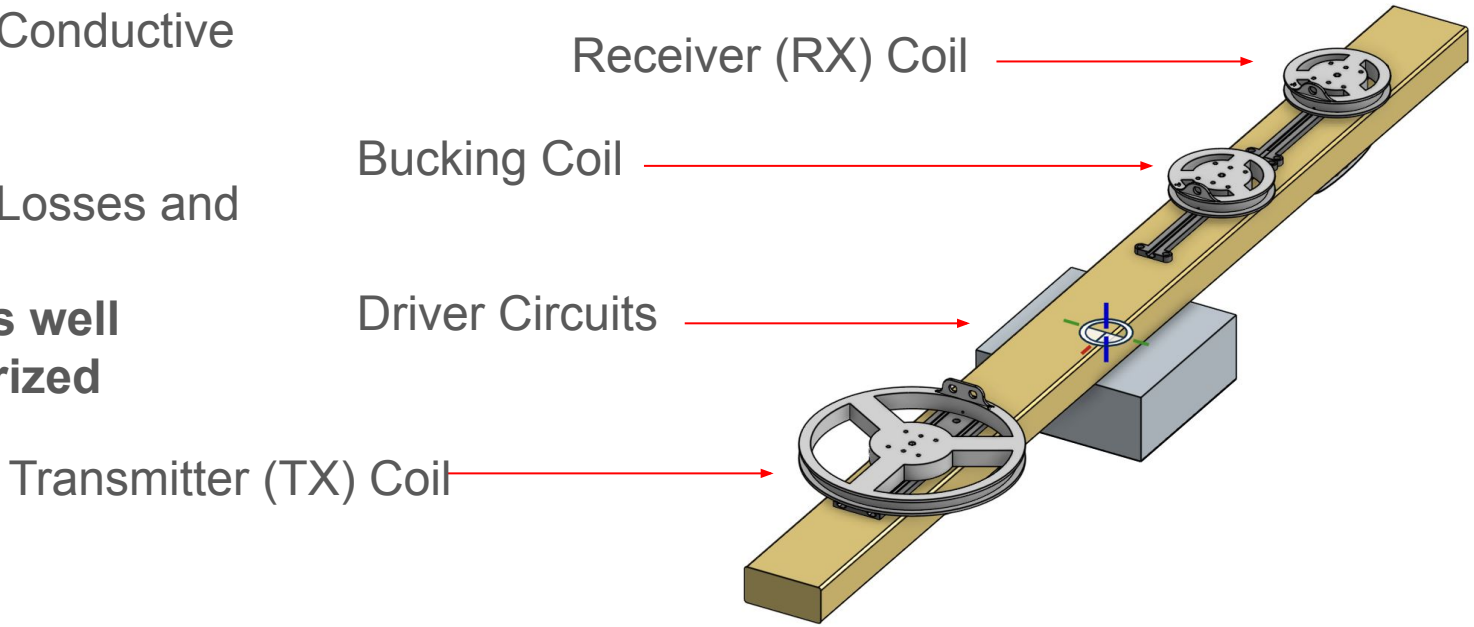

Key Design Limitation

Broadband

- Consistent response from 1-100 kHz

Quasistatic Approximation

- Only near-field effects, for ~1 meter coil spacing we stay under 1 MHz
- Field strength falls off fast

Dipole Approximation

- Coil Radius << intercoil distance

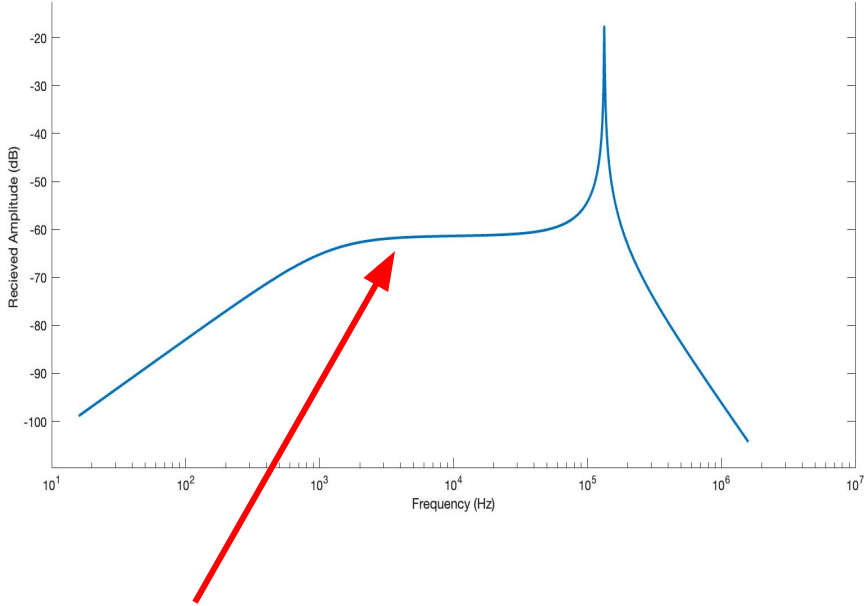

Flat Response in Frequency band of interest

TX Coil: Design

Key Considerations:

- Dipole Approximation (limits coil size)
- Maximizing Field Strength
- Heavily Inductive Load

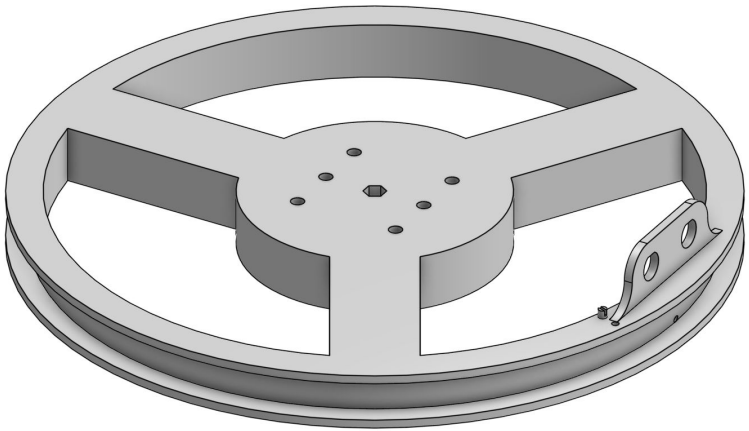

$$H \propto M_{dipole} = \frac{N\pi r^2 V_{Tx}}{L\omega + R}$$

$$L \propto N^2 r ln(r)$$

$$R \propto Nr$$

Coil radius **increases** gain
Number of turns **decreases** gain

TX Driver Circuit

Requirements:

- Inductive Load (Coil)
- Low resistance
- Frequency Range: 1kHz - 100kHz

Off the shelf audio amplifier is an ideal solution

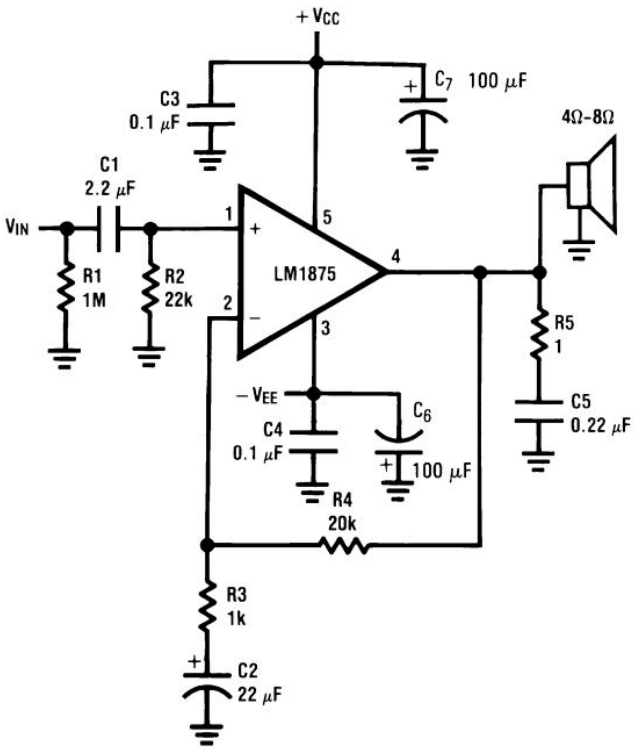

RX Coil: Design

Maximizing Gain between coils

- r^3 scaling means field falls off quickly
- Gain Scales with Area and number of turns
- Coil self resonance / cutoff limiting factor

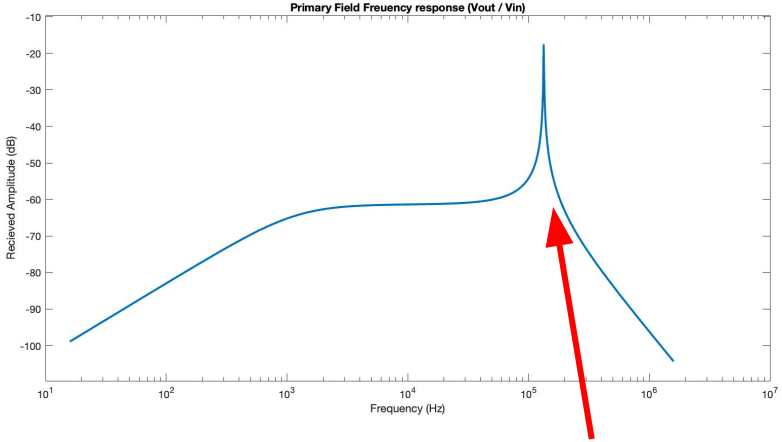

Cutoff Frequency decreases with coil number turns

Faraday's Law:

$$V_{Rx} = \mu_0 N A \frac{dH}{dt}$$

Dipole Approximation:

$$H_{Rx} = \frac{1}{4\pi} \frac{M_{dipole}}{r^3}$$

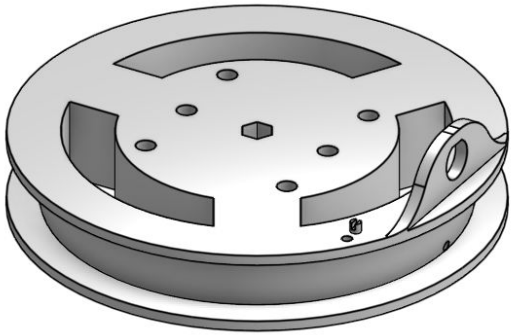

Bucking Coil

Bucking Coil requires precision calibration to perfectly cancel the primary field:

- Dipole Approximation breaks down
- Using detailed FEM simulation can give precision spacing

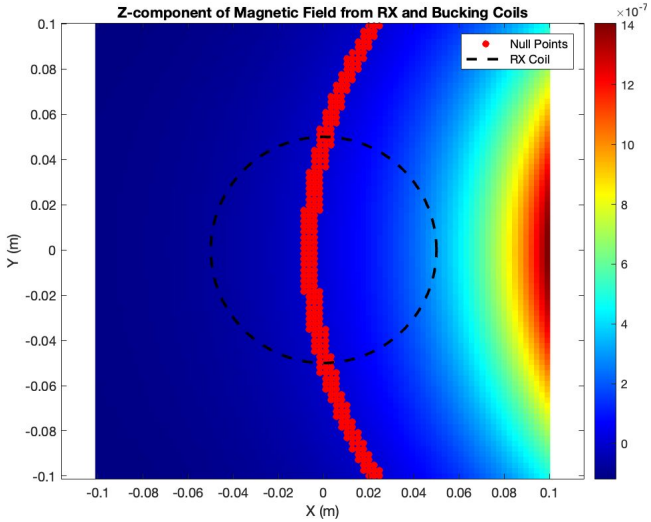

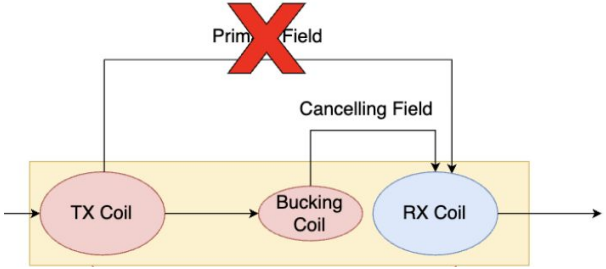

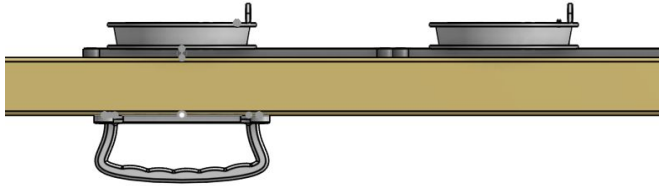

Receiver Circuit

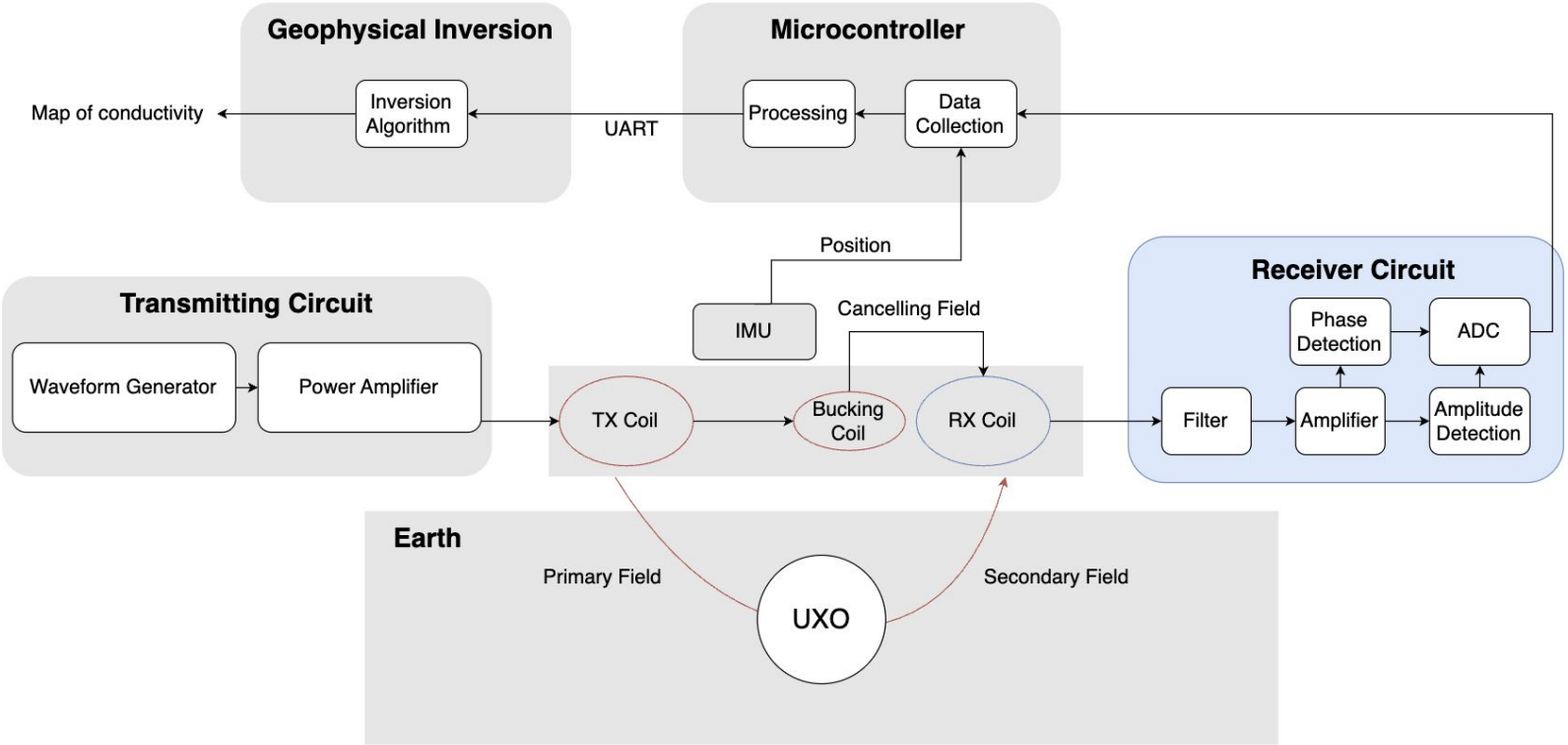

Receiver Circuit

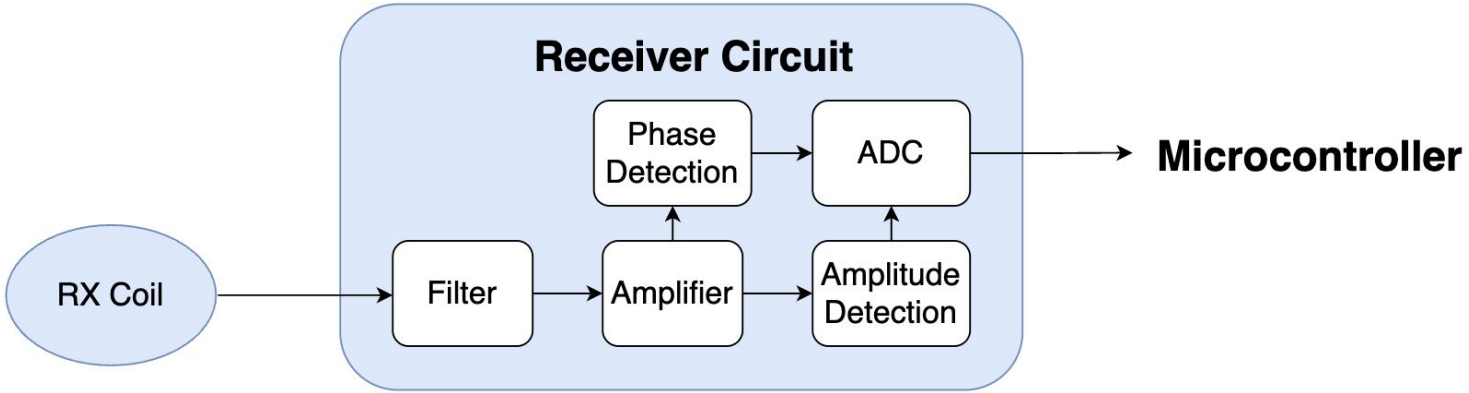

Requirements:

- Measure the response of the system
  - Magnitude
  - Phase

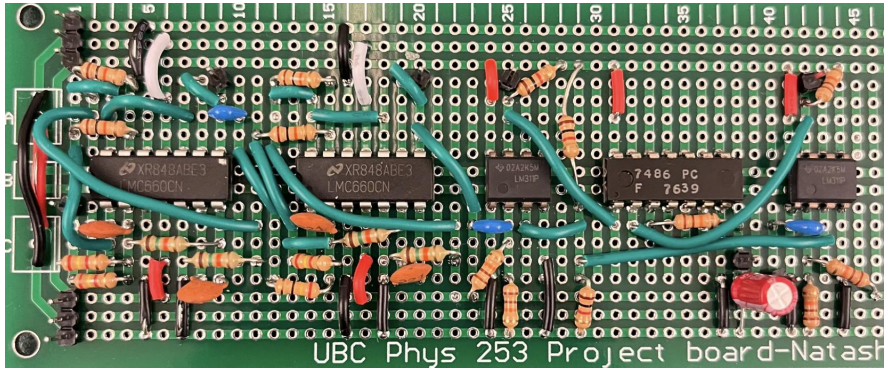

Rx Circuit: Filter and Amplifier

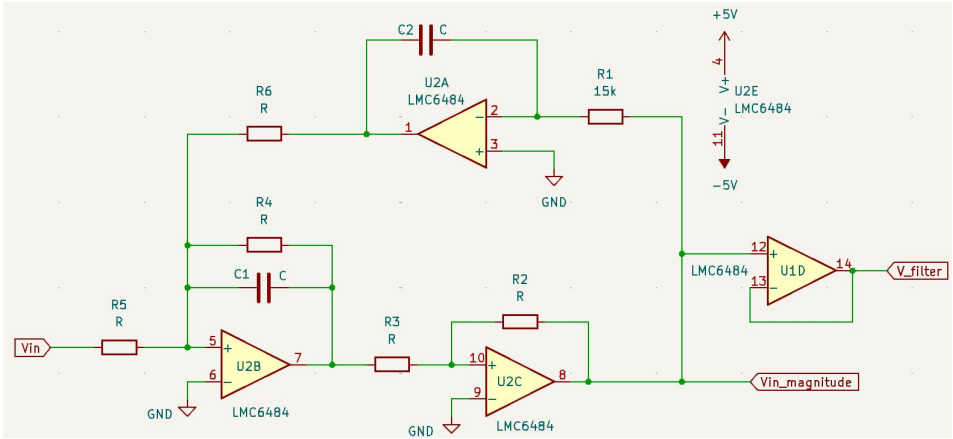

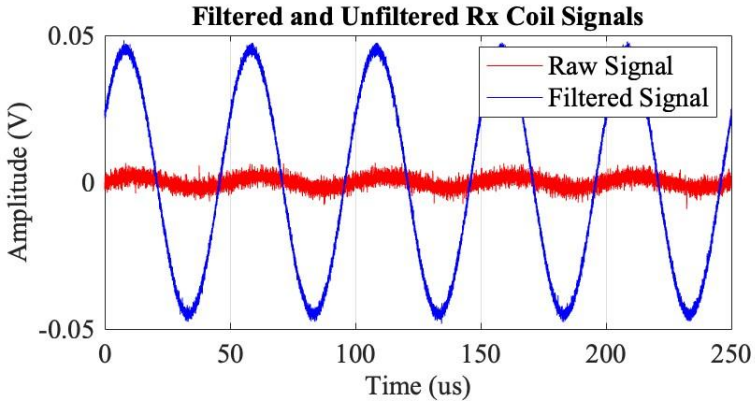

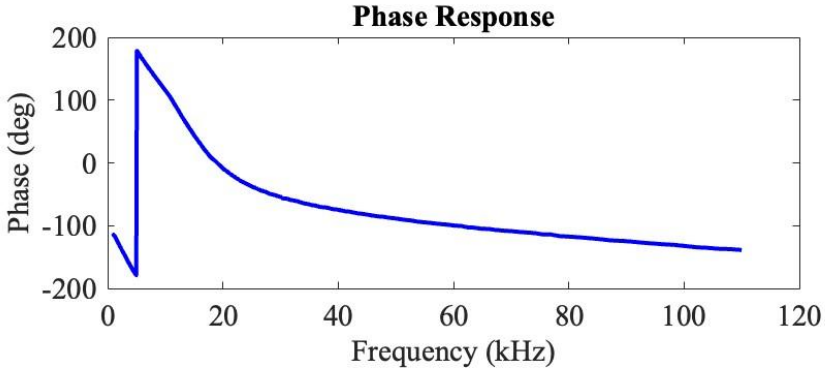

Rx Circuit: Analog Phase Detection

- Inputs: Rx and Tx coil signals
- Output: DC voltage proportional to phase

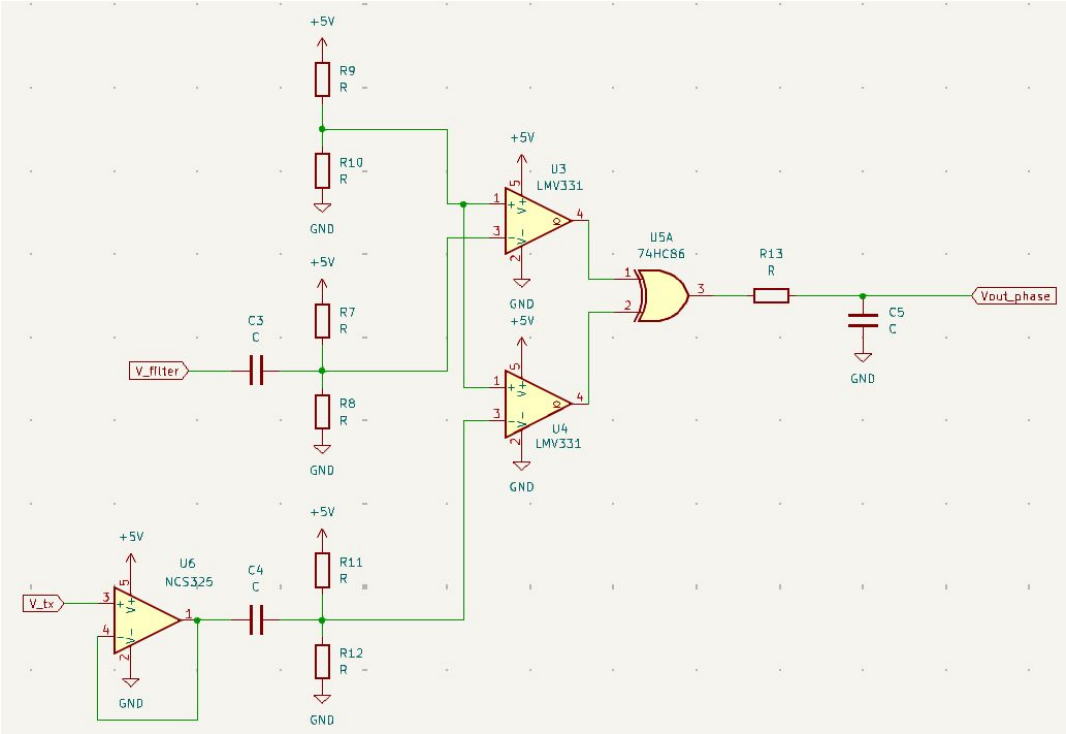

Rx Circuit: Analog Phase Detection

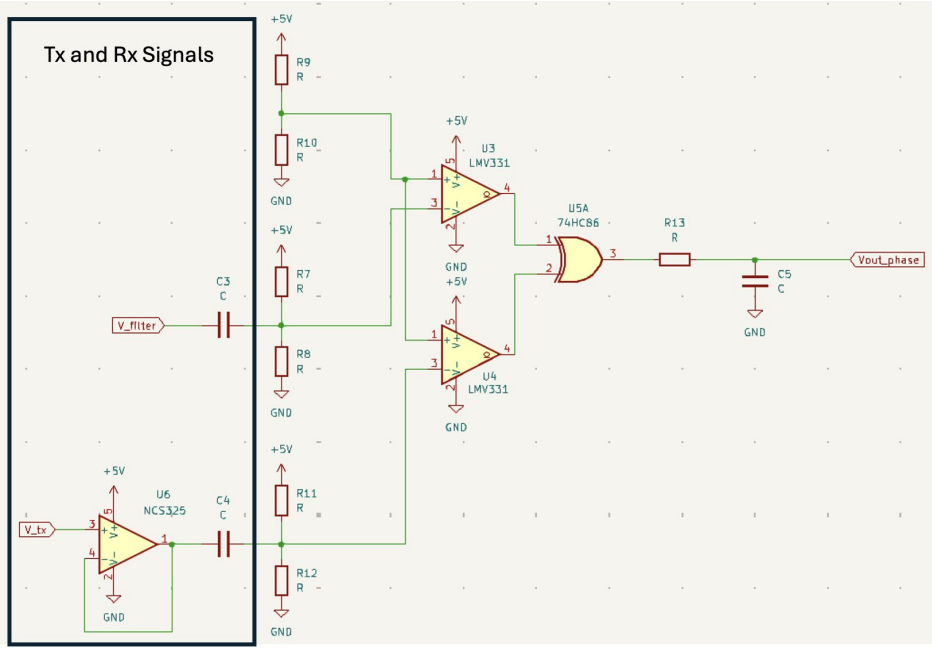

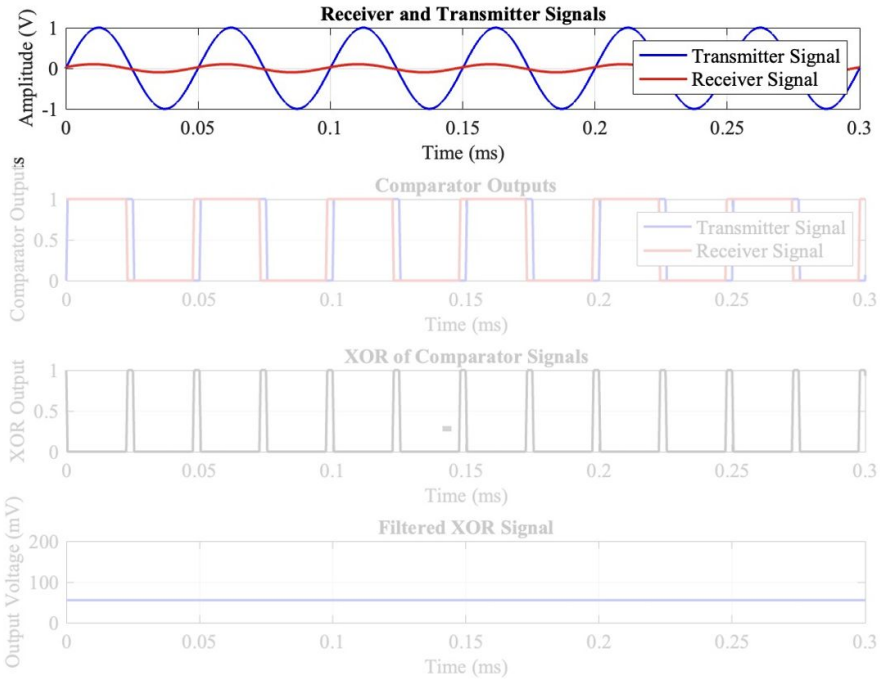

Rx Circuit: Analog Phase Detection

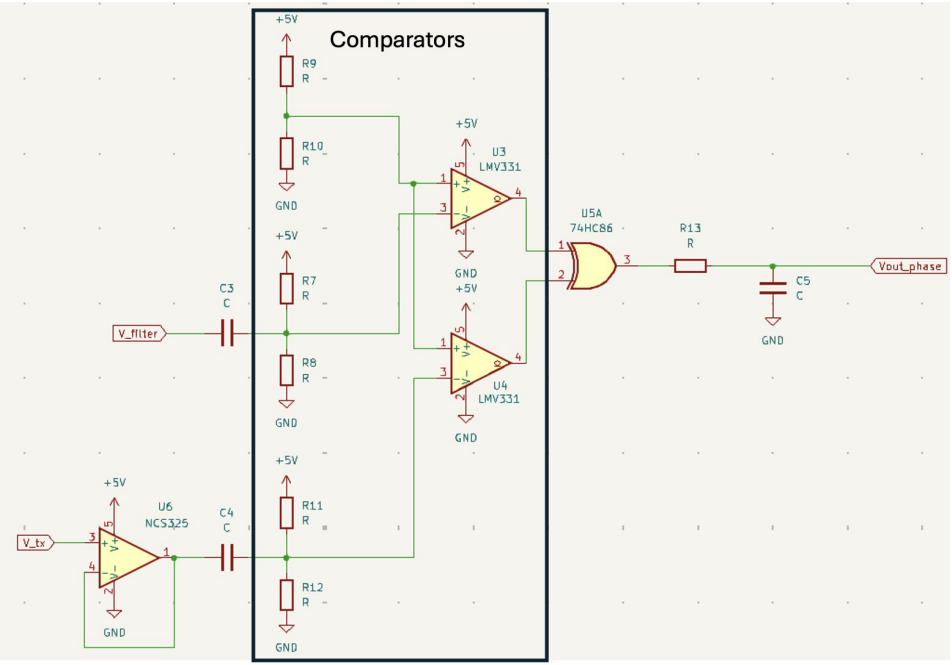

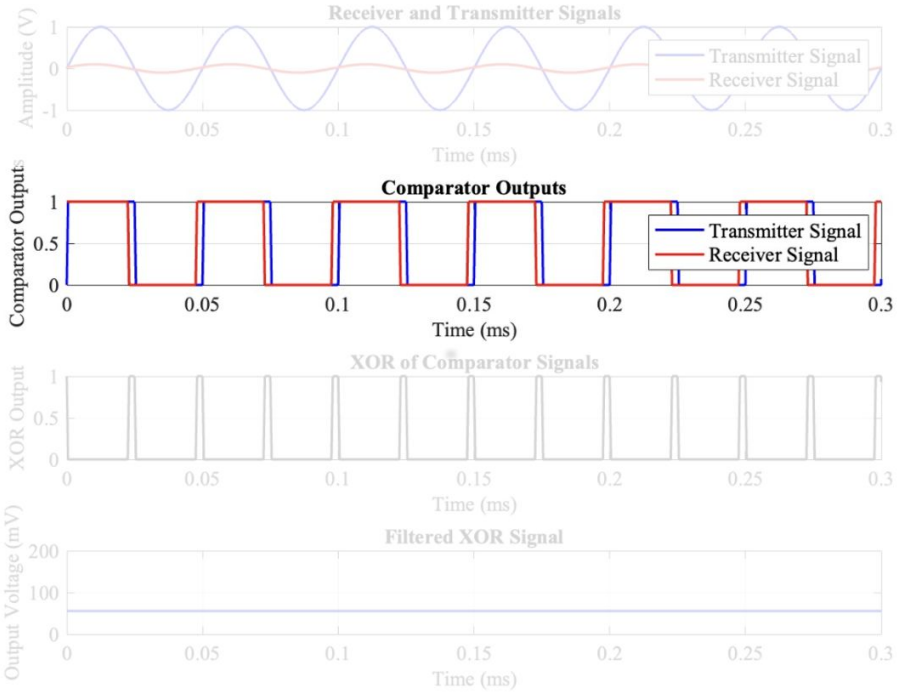

Rx Circuit: Analog Phase Detection

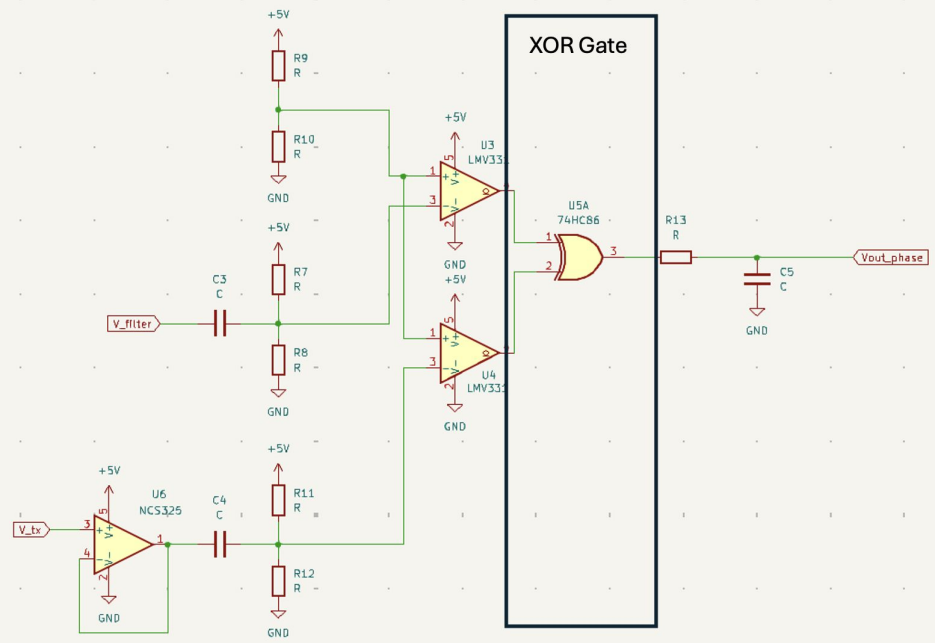

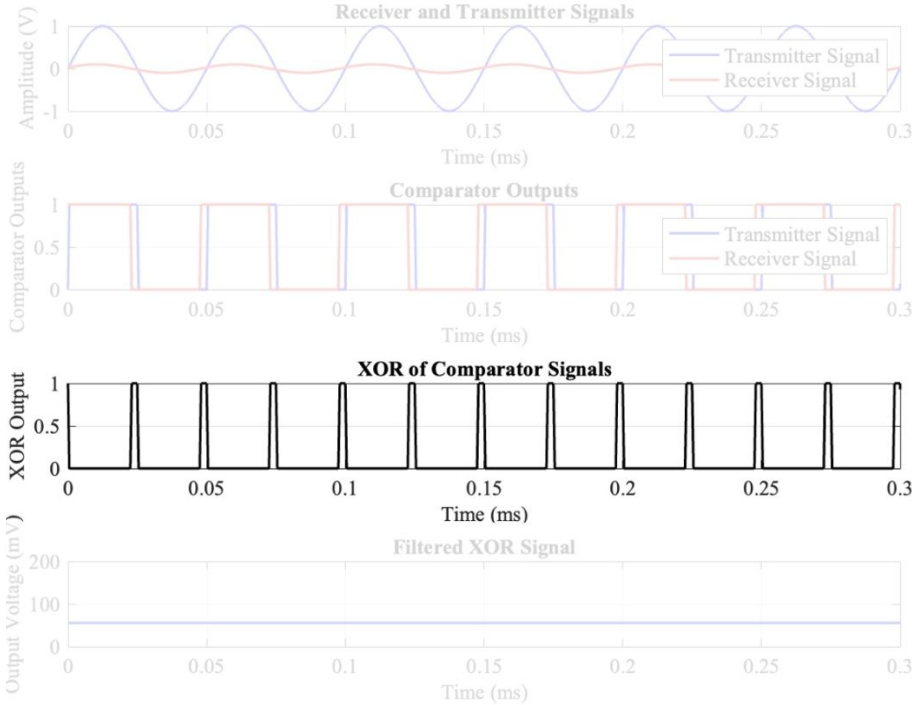

Rx Circuit: Analog Phase Detection

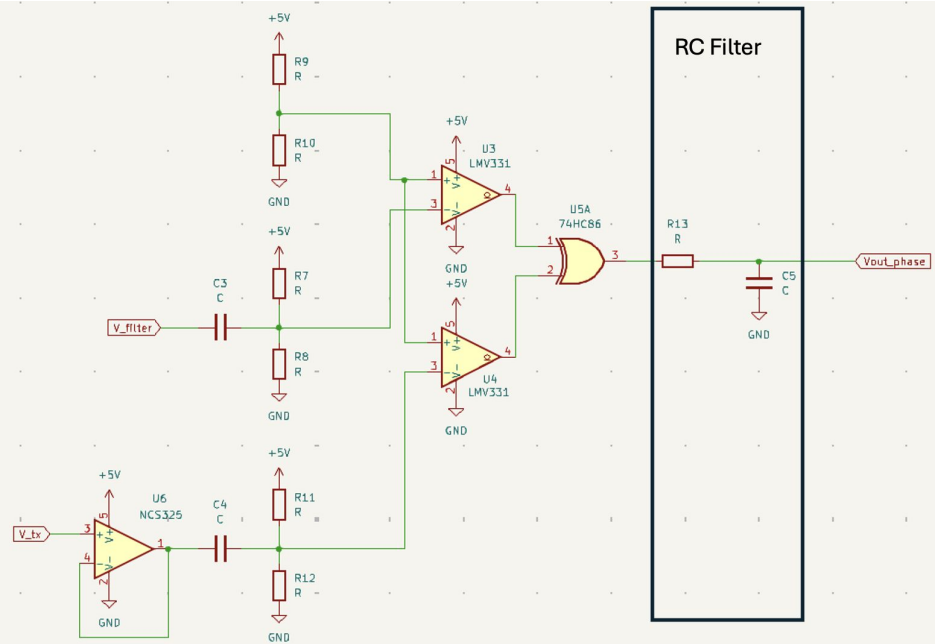

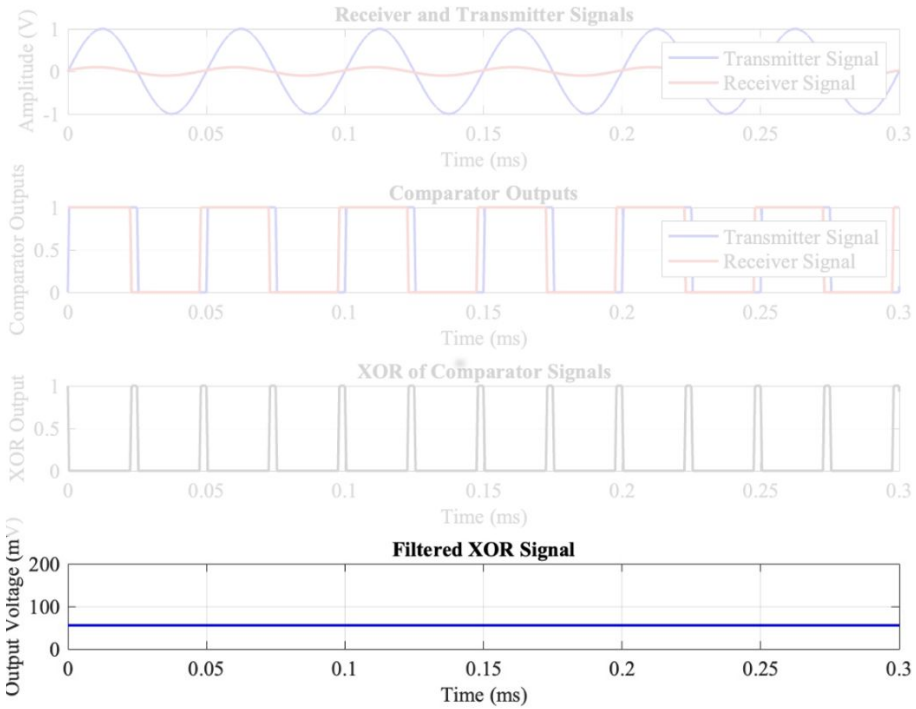

Firmware:

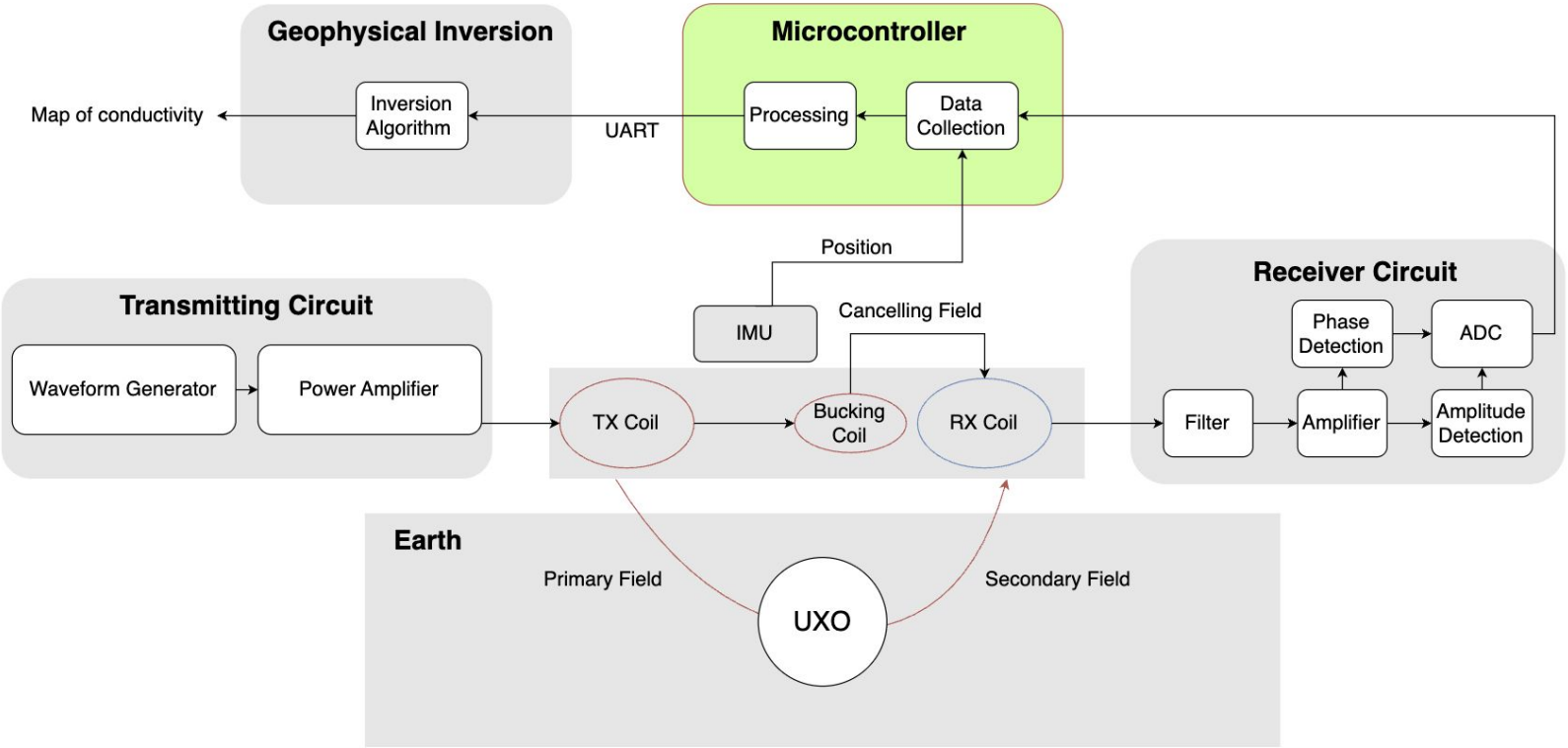
Geophysical Inversion
Map of conductivity
Inversion Algorithm
UART
Microcontroller
Processing
Data Collection
Position
IMU
Cancelling Field
Transmitting Circuit
Waveform Generator
Power Amplifier
TX Coil
Bucking Coil
RX Coil
Receiver Circuit
Phase Detection
ADC
Filter
Amplifier
Amplitude Detection
Earth
Primary Field
Secondary Field
UXO

Firmware:

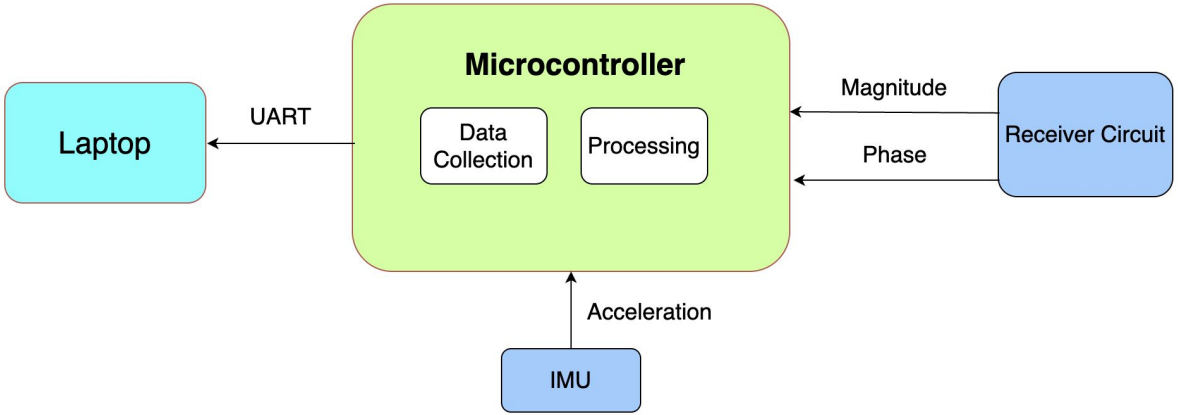

LGA-14L
(2.5 x 3.0 x 0.71 mm) typ.

IMU/Gyro Chip

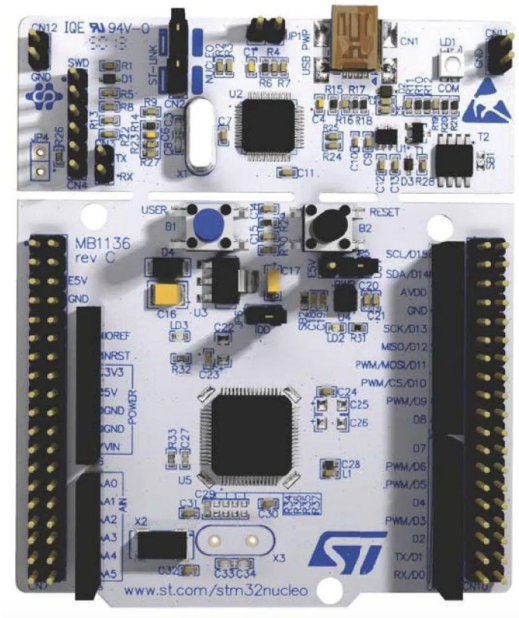

STM32 Nucleo Board

Software: Geophysical Inversion

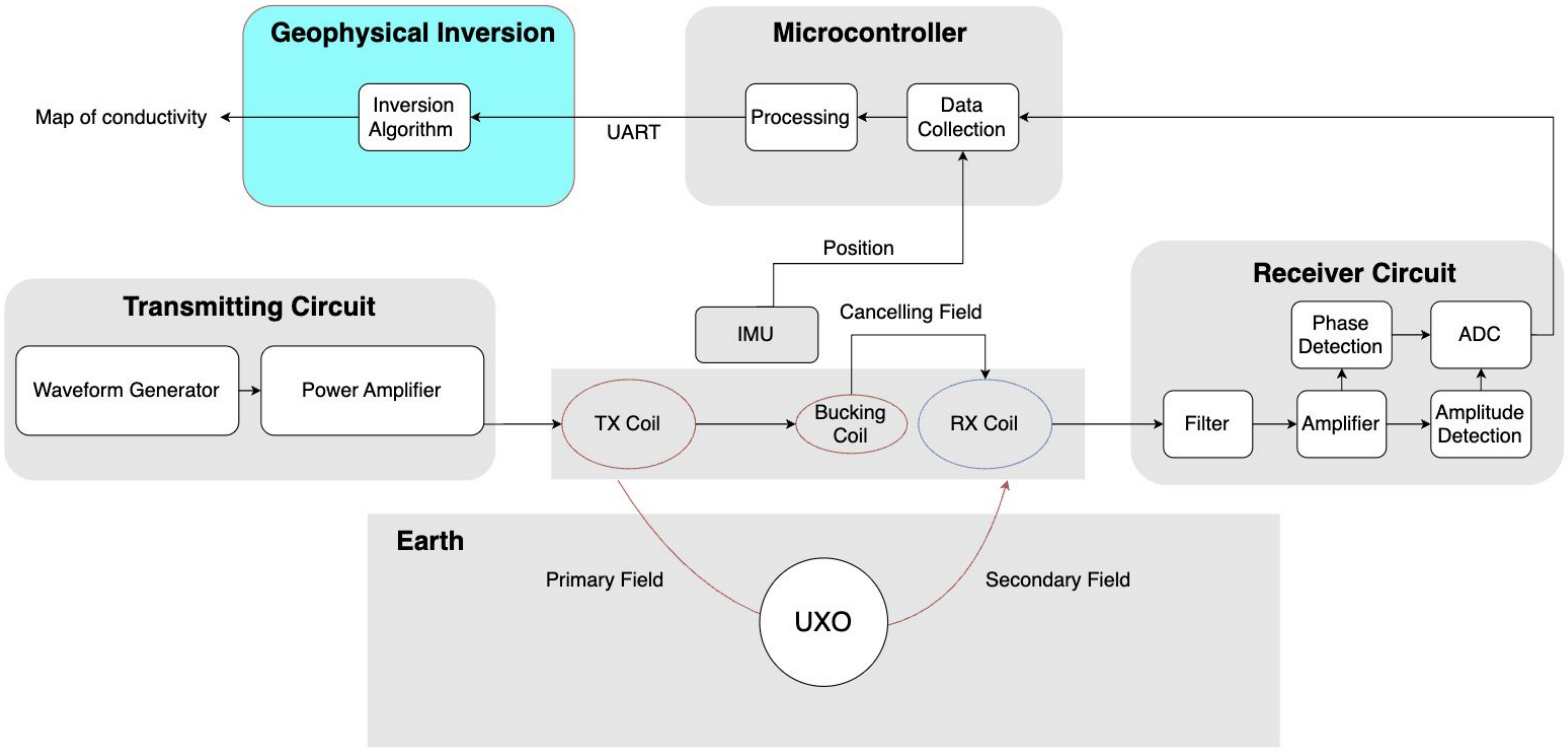

Magnetic Response of a UXO

- Survey of real UXOs
- Responses vary depending on the sensor used
- UXOs tend to have large dipole component

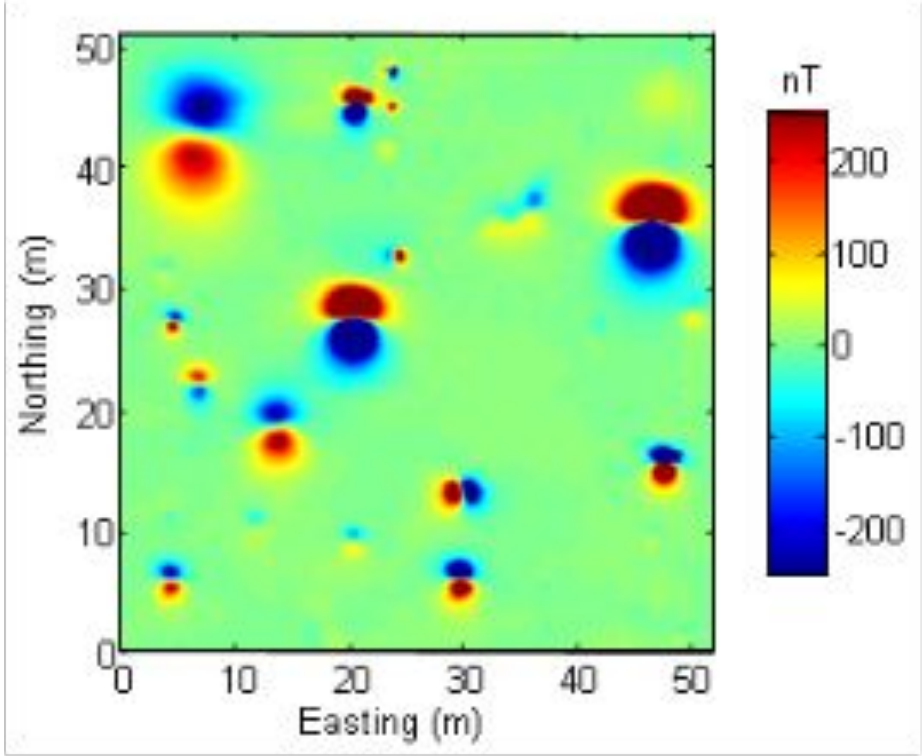

Modelling a UXO

Eddy currents are hard to describe

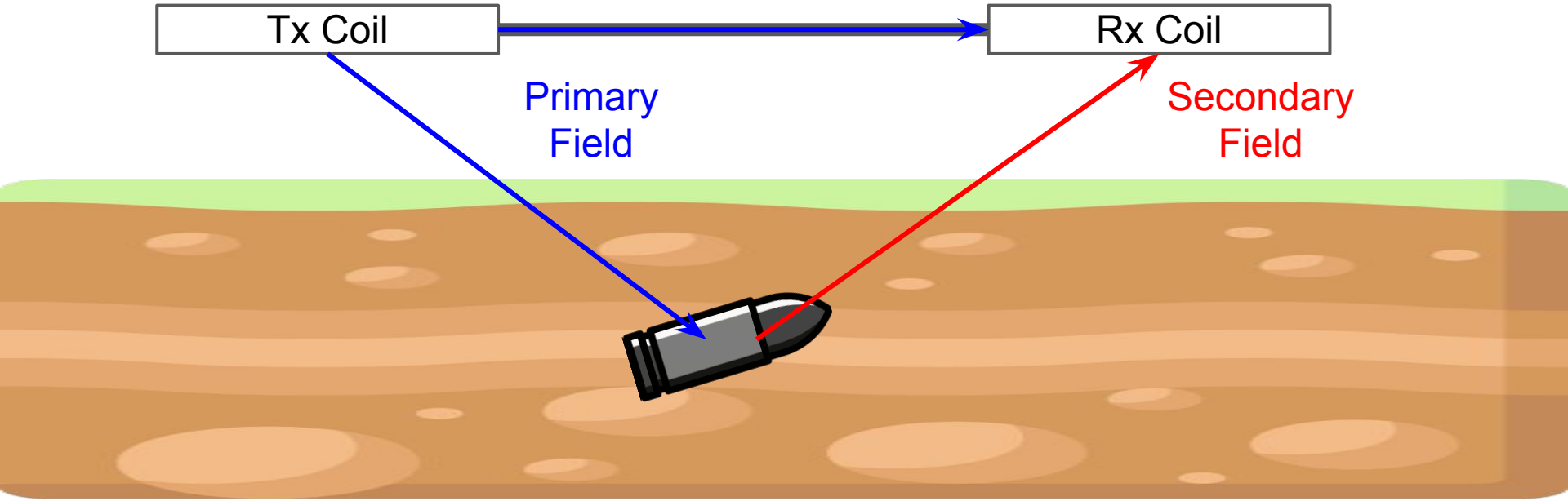

Modelling a UXO

Can approximate UXO as a loop to understand behavior

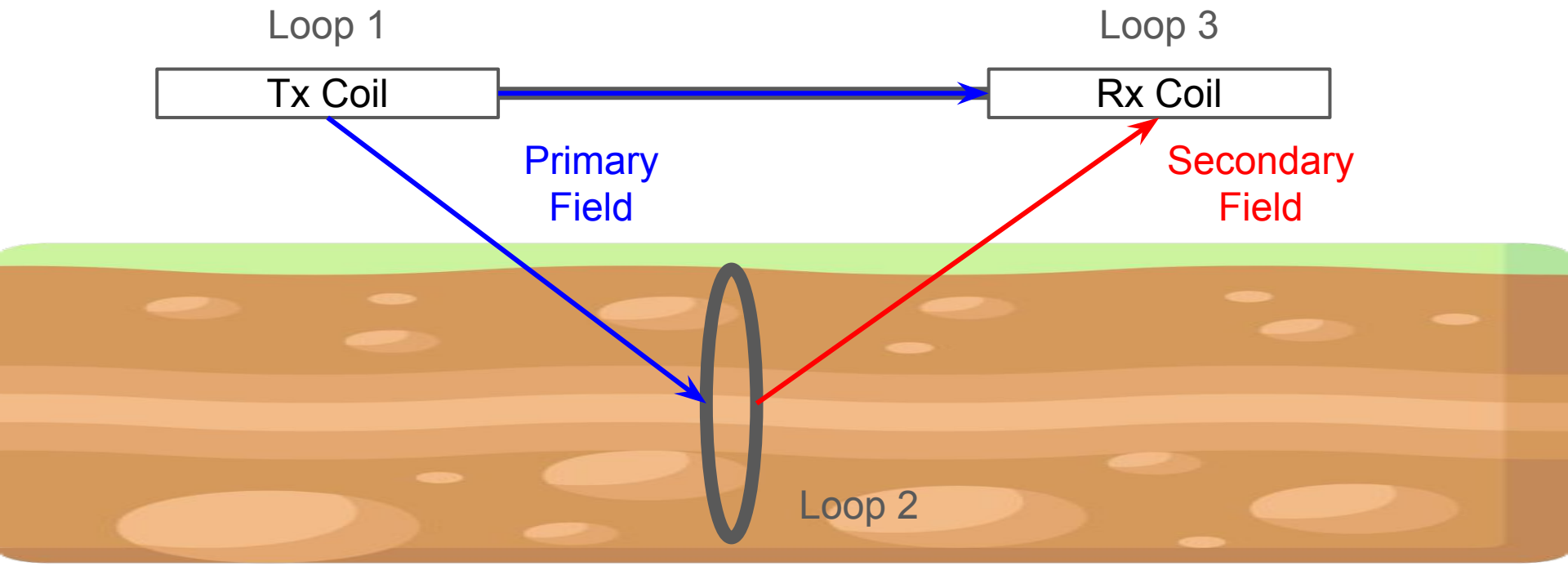

Modelling a UXO

Can express a mutual induction (M) between each coil

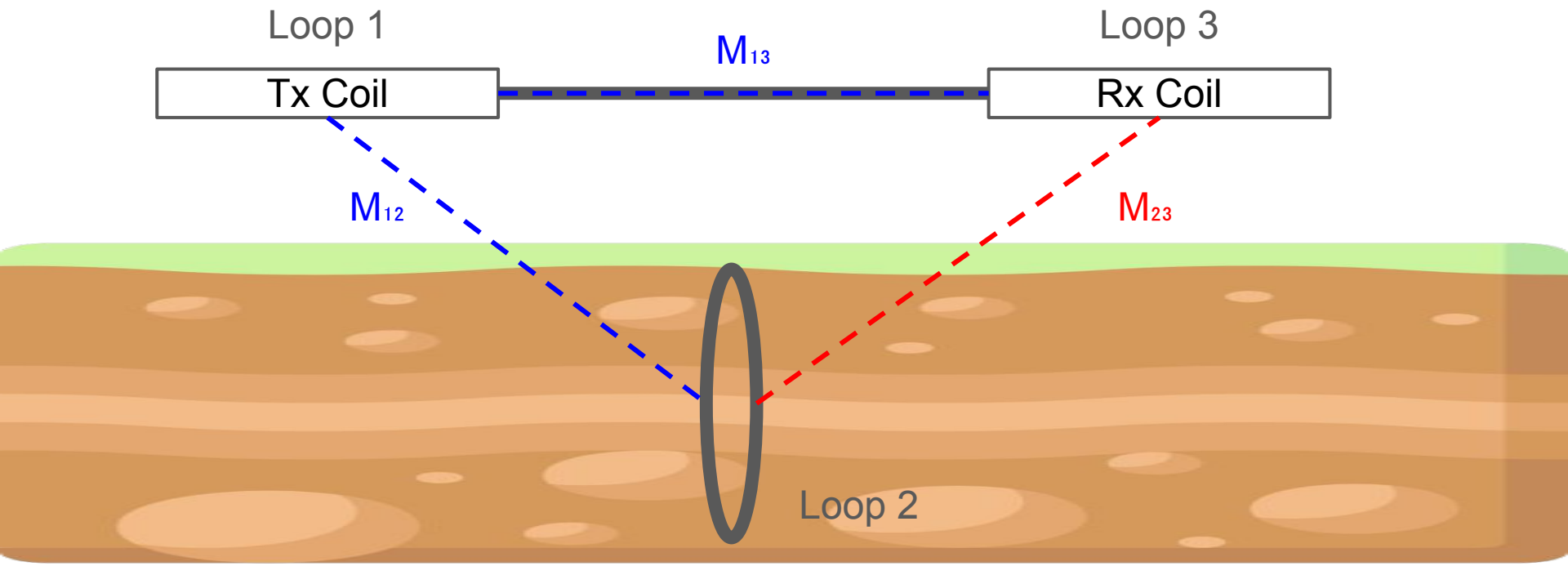

Modelling a UXO

The EMF felt by one coil from another is proportional to M

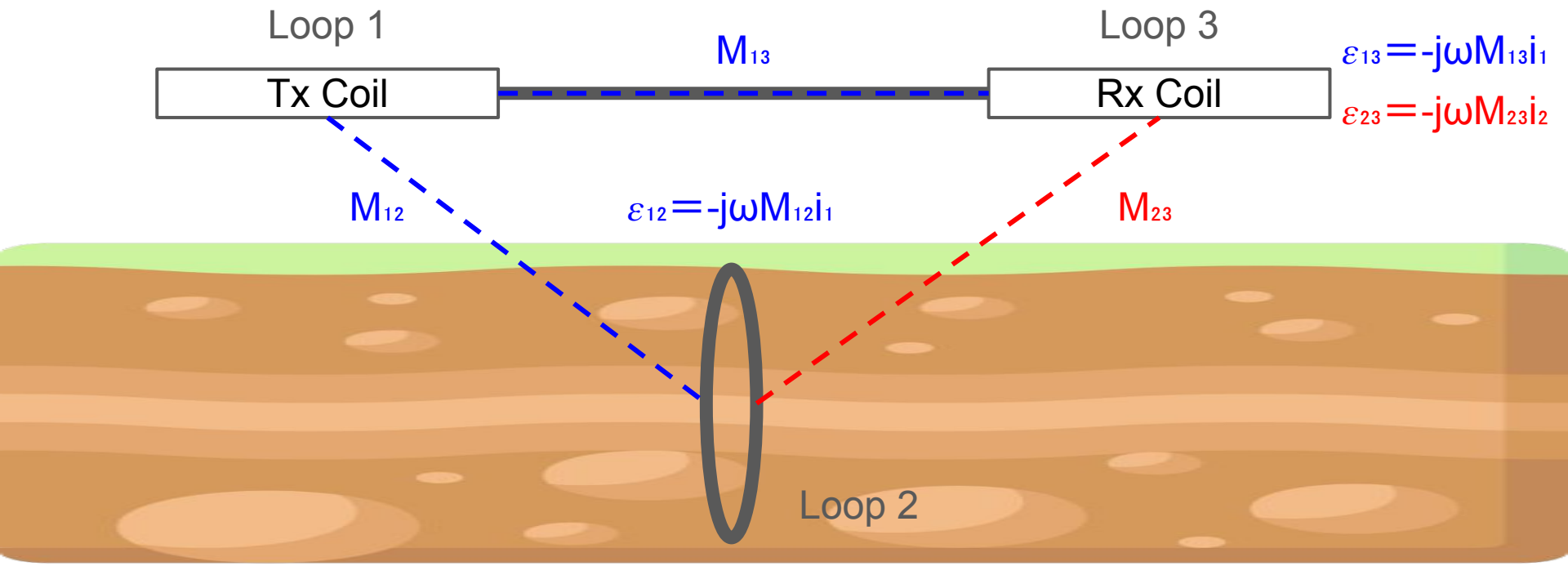

Modelling a UXO

$$\frac{H_3^s}{H_3^p} = \frac{\varepsilon_{23}}{\varepsilon_{13}} \propto -\frac{M_{12}M_{23}}{M_{13}}$$

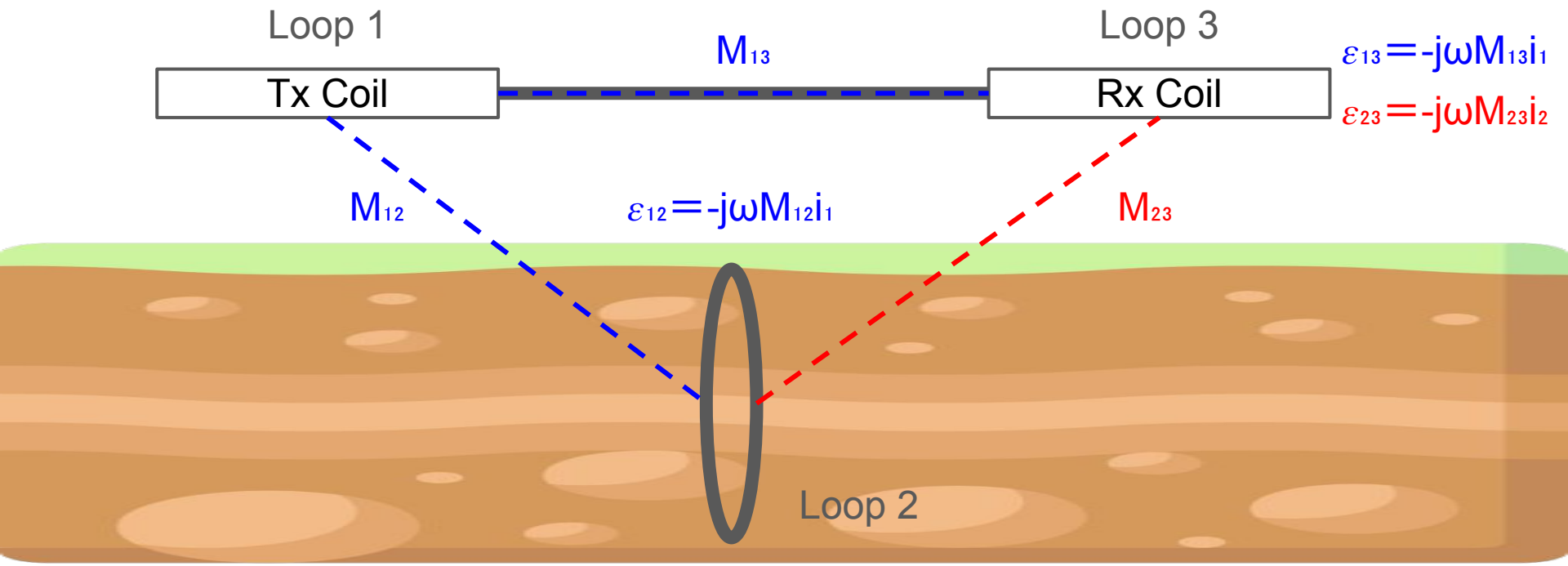

Frequency Response of Three-Loop Model

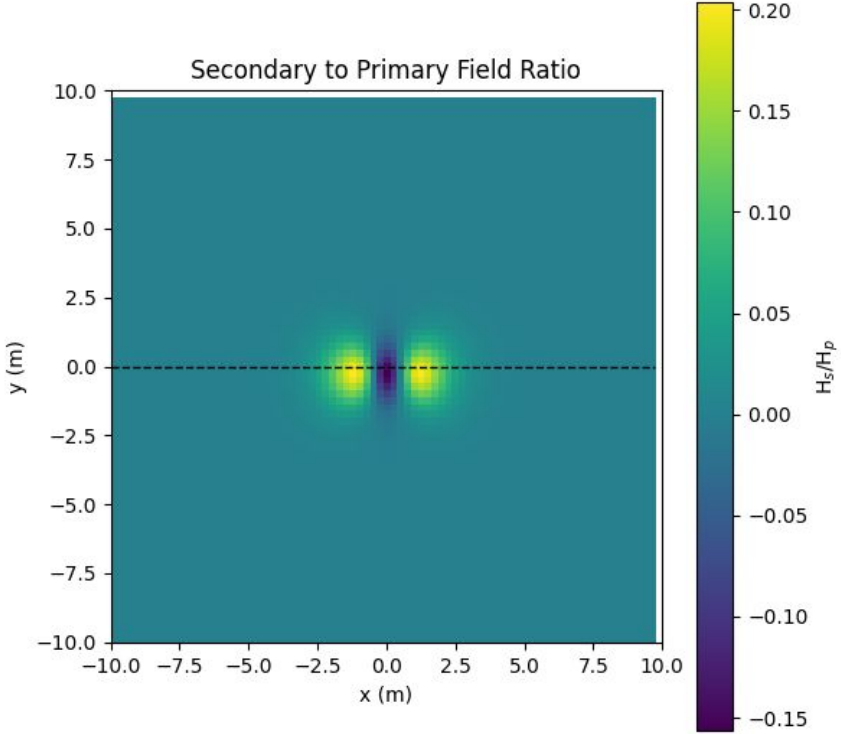

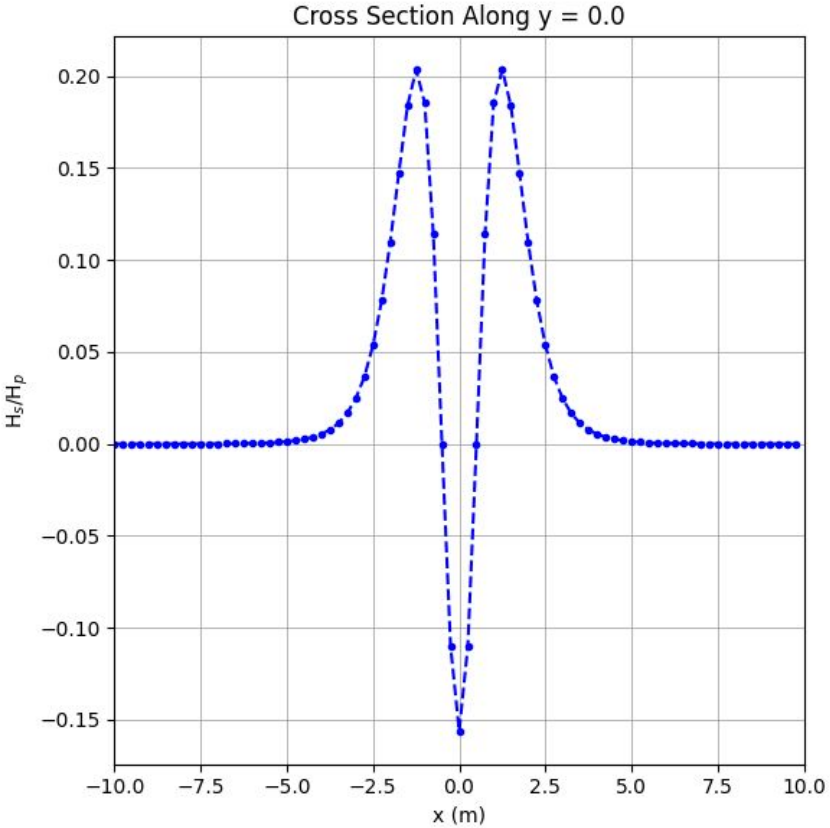

Generalizing the Approach

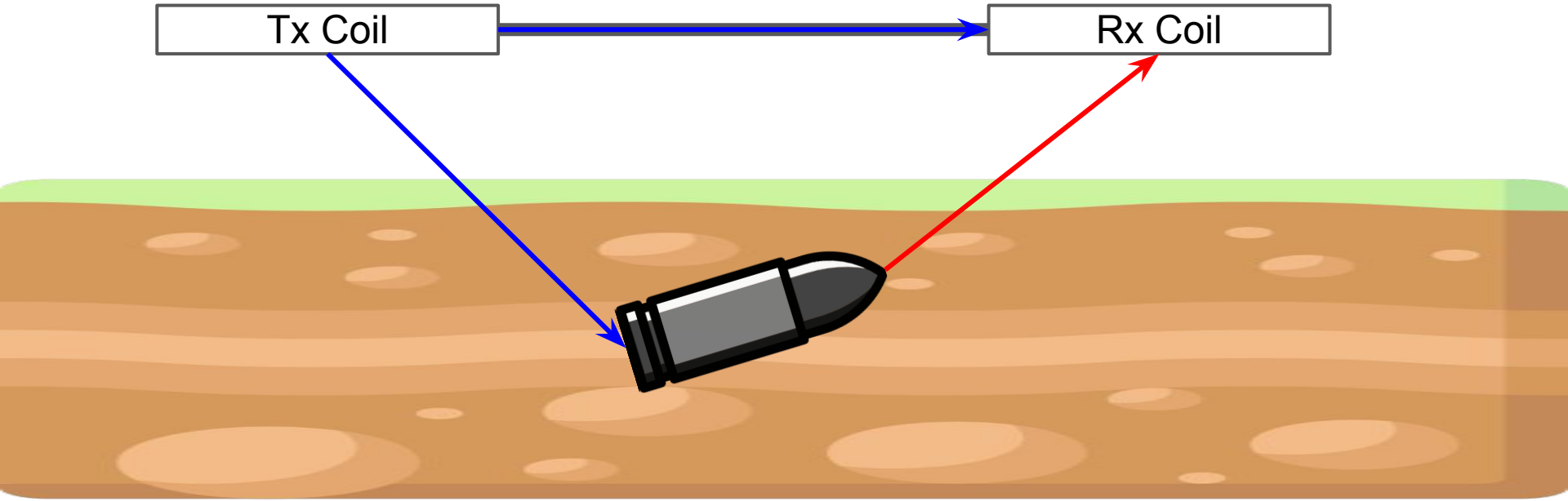

Generalizing the Approach

Use multiple loops to better simulate the response of UXOs

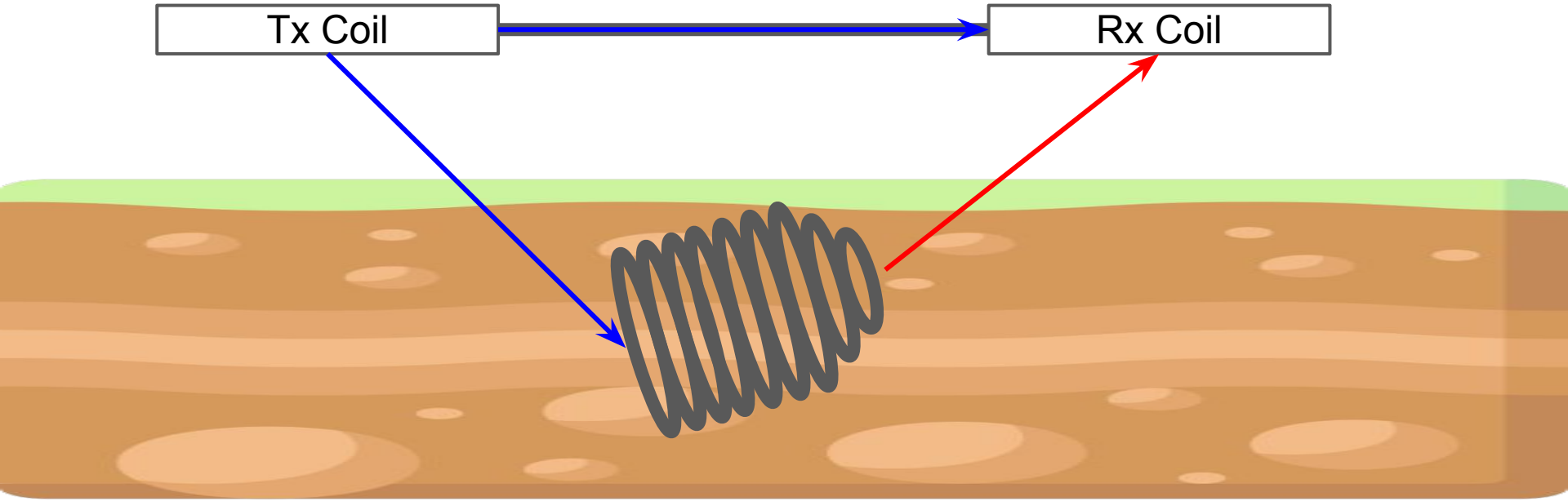

Simulated Data Output

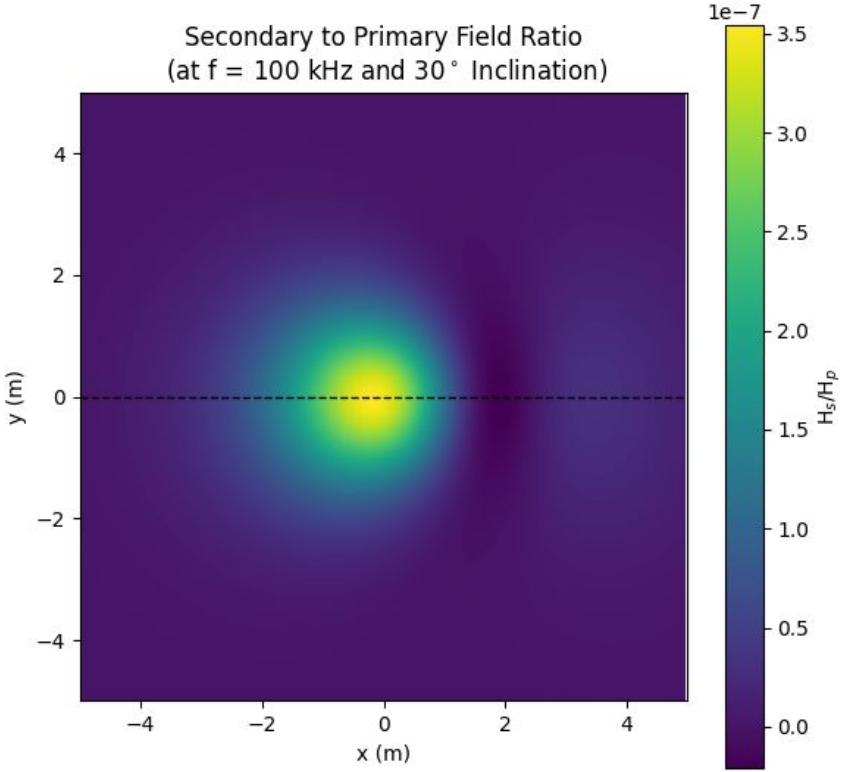

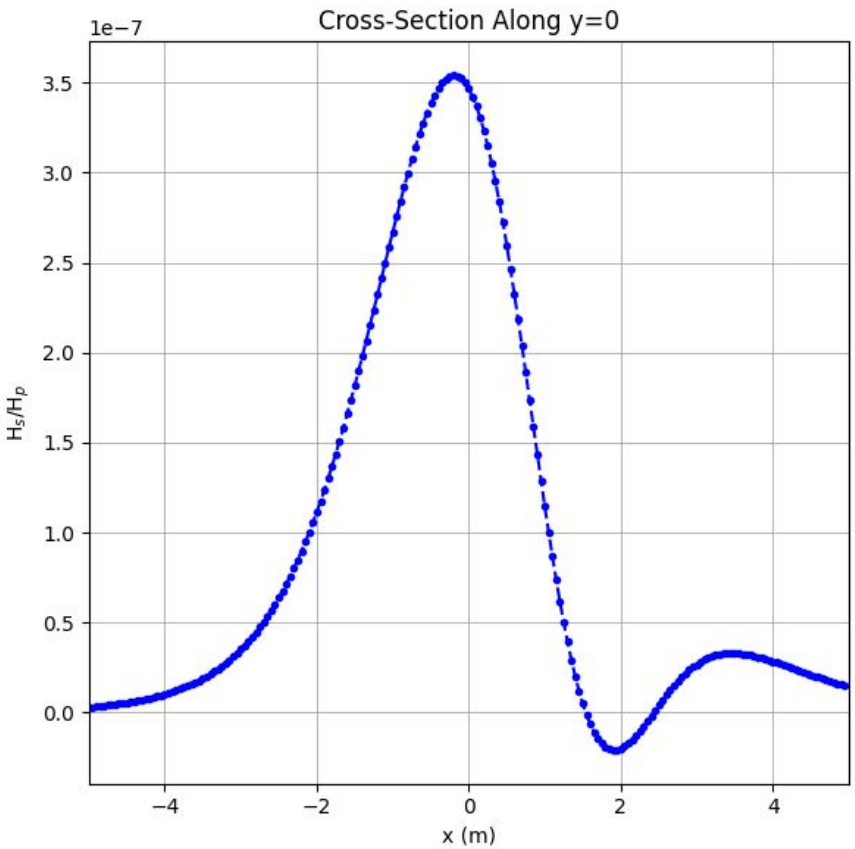

Data Analysis

Data

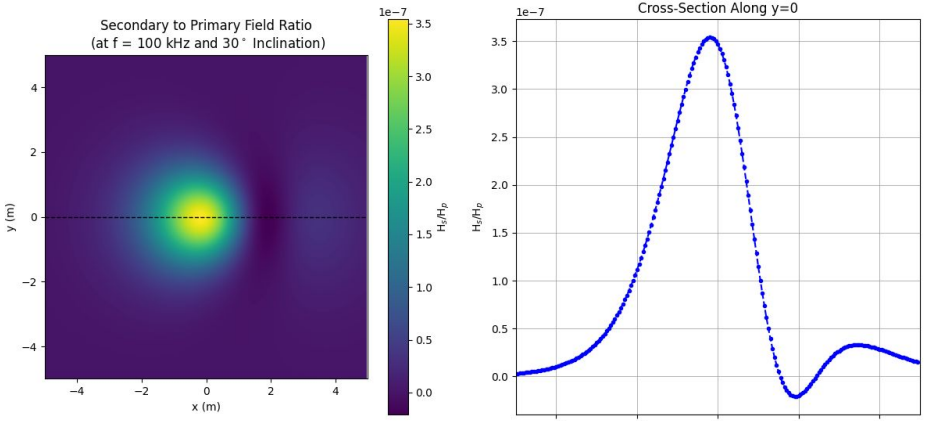

Necessary Information

- Depth
- Size/Shape
- Conductivity

Extract via
Geophysical Inversion

What is Geophysical Inversion?

Geophysical Inversion

- A mathematical technique that converts raw measurements into a meaningful model
- Helps estimate:
  - Location
  - Shape
  - Other properties (ex. Conductivity)

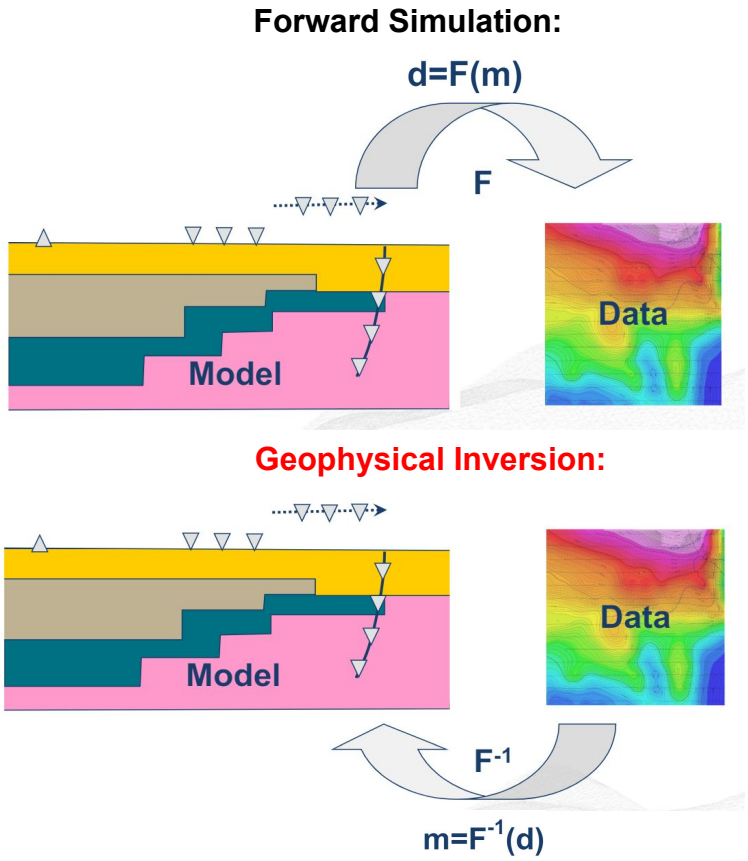

How does it work?

Forward Modelling

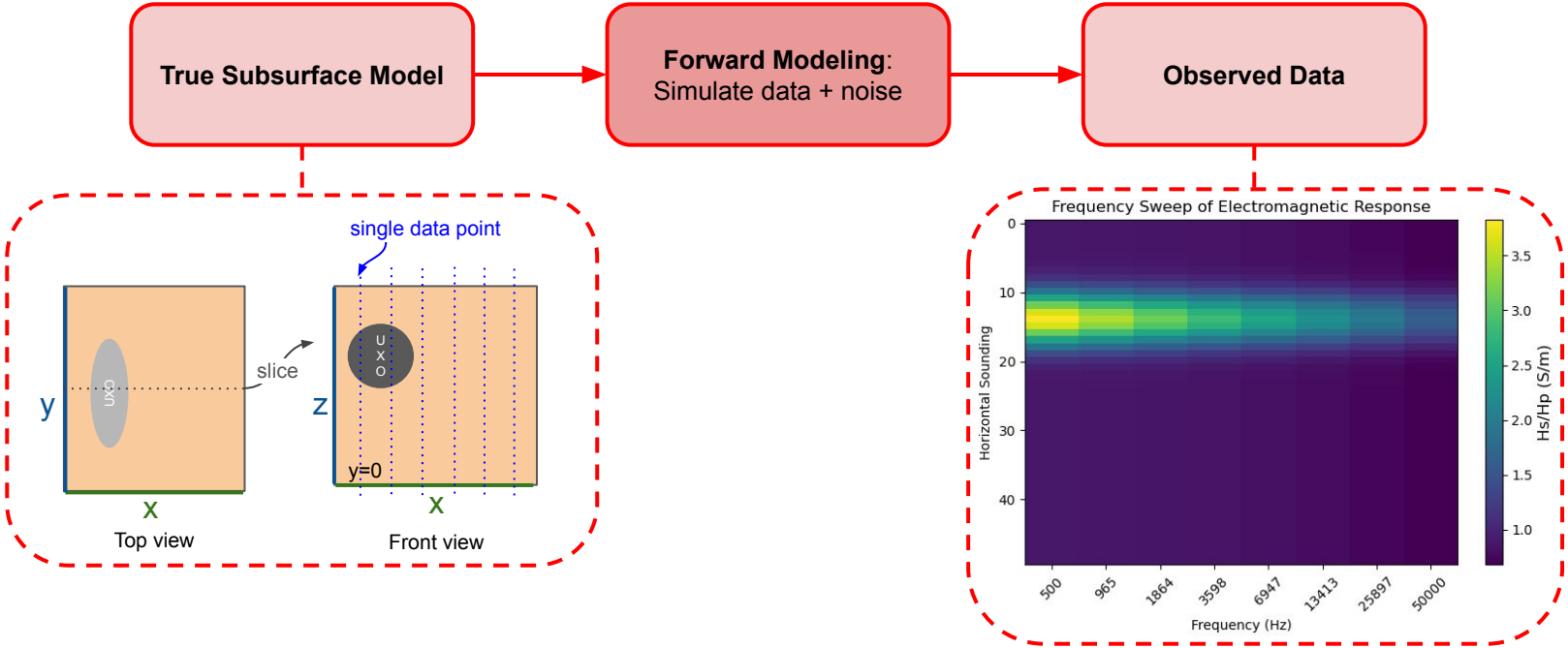

Inversion Algorithm

Initial Subsurface Model:

Forward Modeling: Simulate data

Predicted Data (Plain Model)

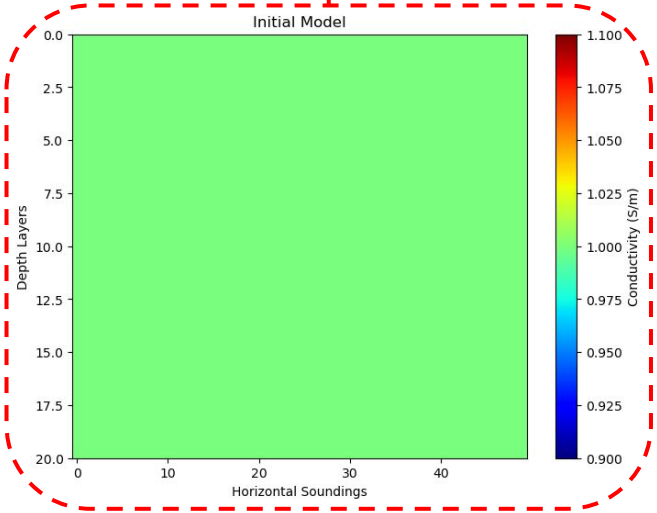

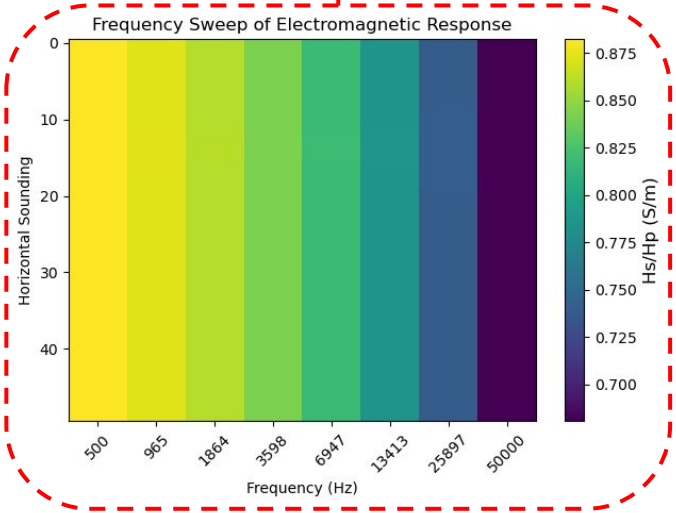

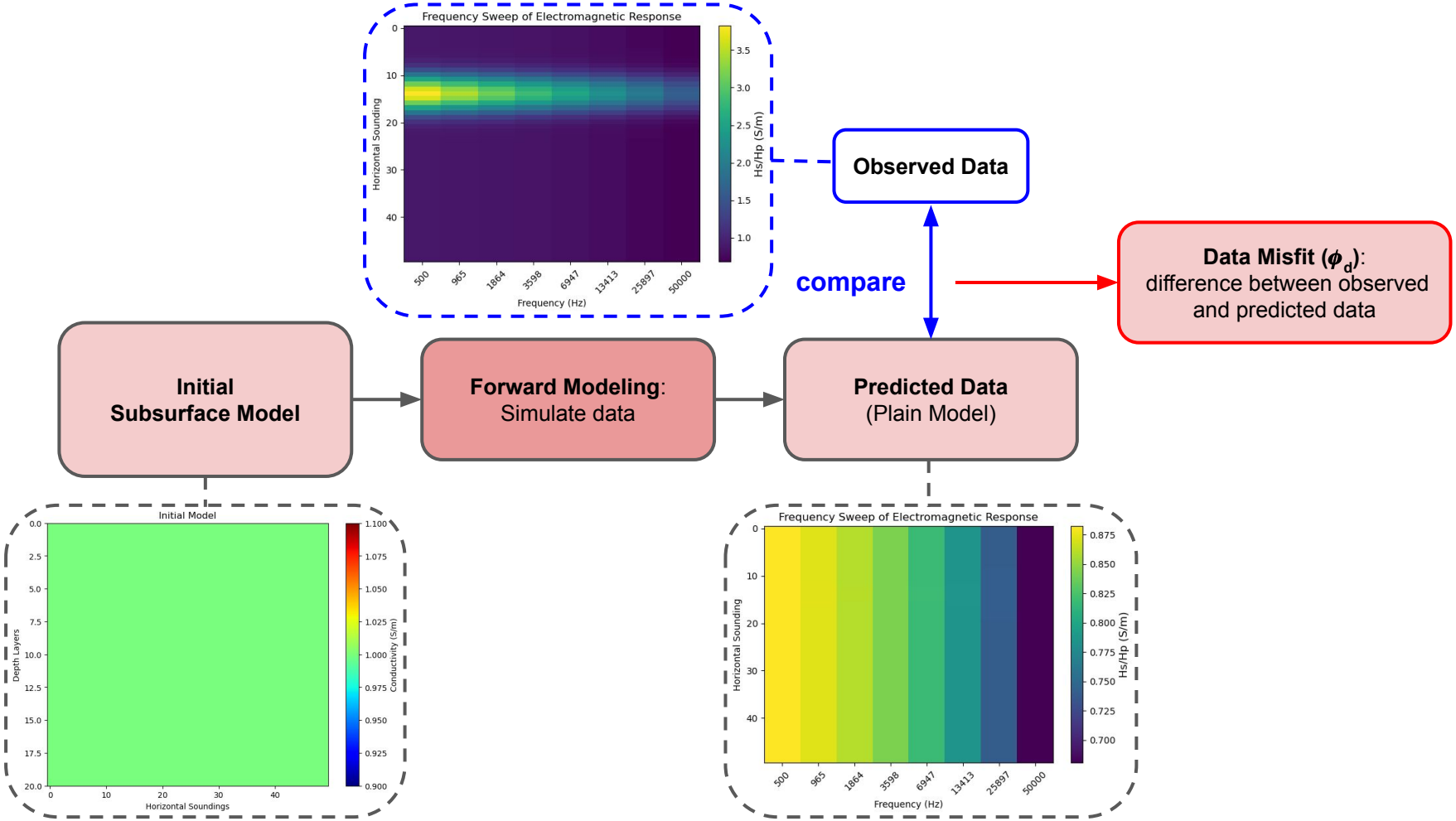
Frequency Sweep of Electromagnetic Response
Horizontal Sounding
Frequency (Hz)
Hs/Hp (S/m)
Observed Data
compare
Data Misfit (ϕ_d):
difference between observed and predicted data
Initial Subsurface Model
Forward Modeling:
Simulate data
Predicted Data
(Plain Model)
Initial Model
Depth Layers
Horizontal Soundings
Conductivity (S/m)
Frequency Sweep of Electromagnetic Response
Horizontal Sounding
Frequency (Hz)
Hs/Hp (S/m)

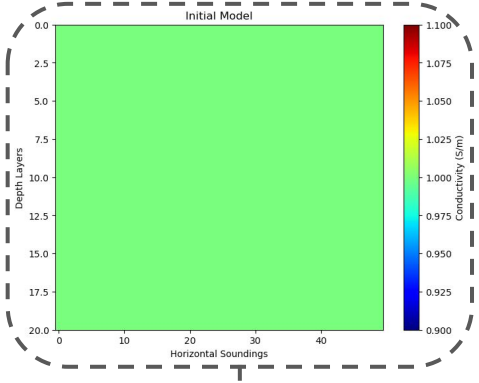

Initial Subsurface Model: (Plain Background)

Forward Modeling: Simulate data

Predicted Data (Plain Model)

Observed Data

compare

Data Misfit (ϕ_d): difference between observed and predicted data

Update Model

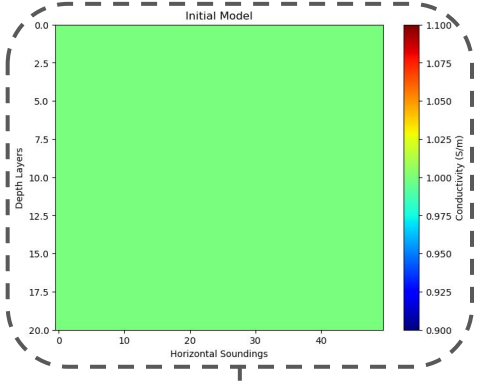

Observed Data

compare

Data Misfit (ϕ_d): difference between observed and predicted data

Initial Subsurface Model: (Plain Background)

Forward Modeling: Simulate data

Predicted Data (Plain Model)

Regularization (ϕ_m): constraints on the solution

Update Model

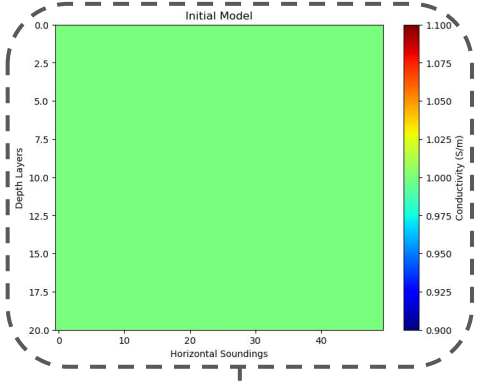

Initial Subsurface Model: (Plain Background)

Forward Modeling: Simulate data

Predicted Data (Plain Model)

Observed Data

compare

Data Misfit (ϕ_d): difference between observed and predicted data

Regularization (ϕ_m): constraints on the solution

Update Model

After one iteration

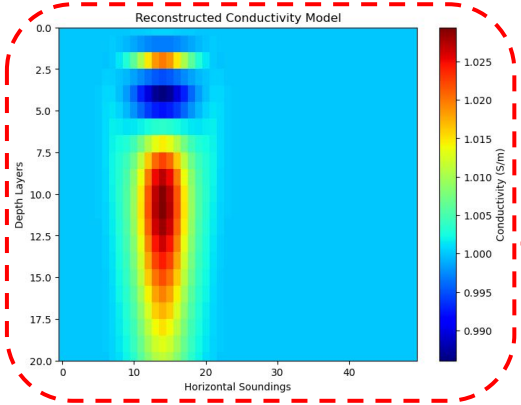

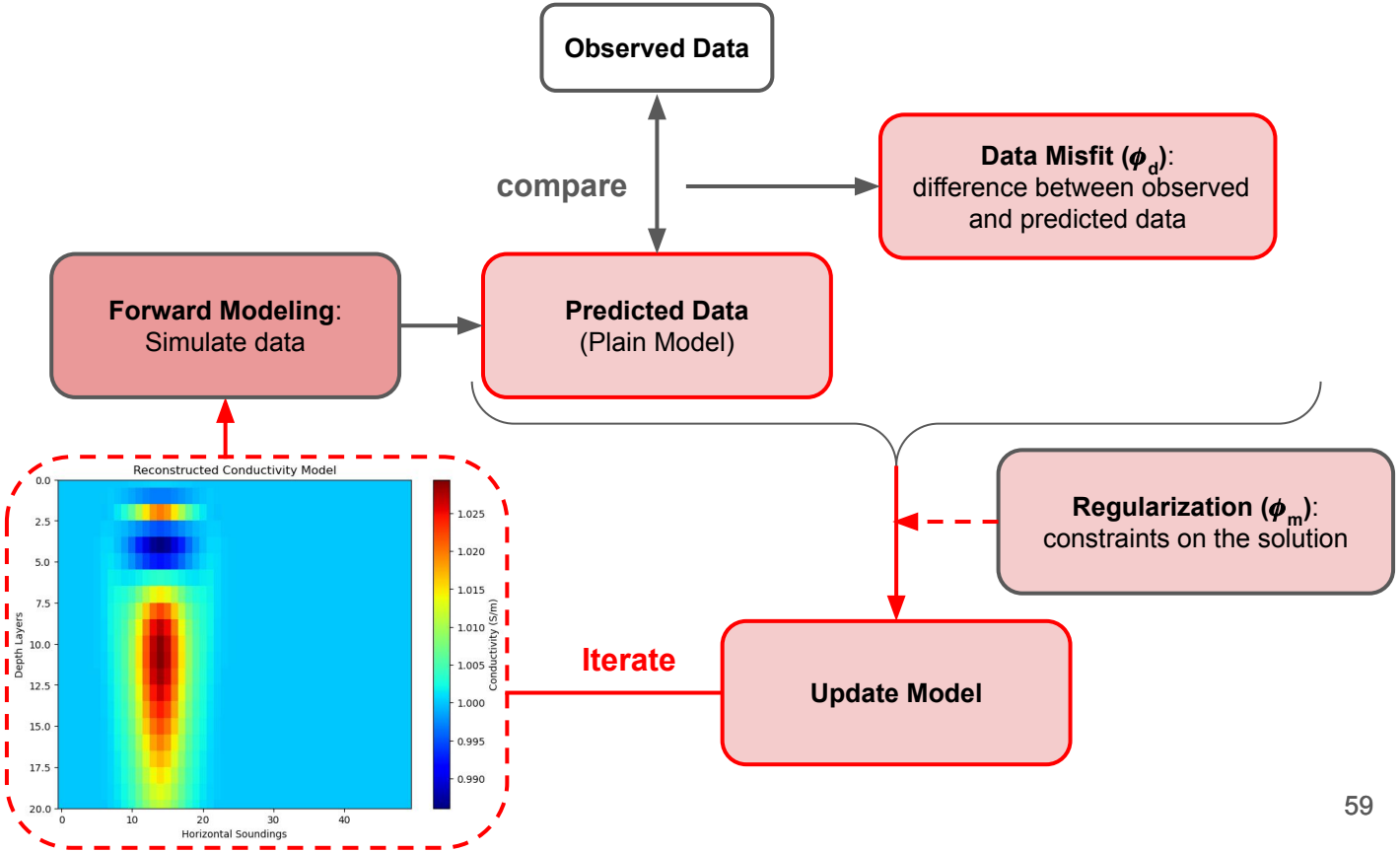
Observed Data
compare
Data Misfit (ϕ_d):
difference between observed and predicted data
Forward Modeling:
Simulate data
Predicted Data
(Plain Model)
Regularization (ϕ_m):
constraints on the solution
Reconstructed Conductivity Model
Depth Layers
Horizontal Soundings
Conductivity (S/m)
Iterate
Update Model

Inversion Algorithm

Goal of Inversion:

Minimize $\boldsymbol{\phi}_d + \beta\, \boldsymbol{\phi}_m$

(β=trade-off parameter)

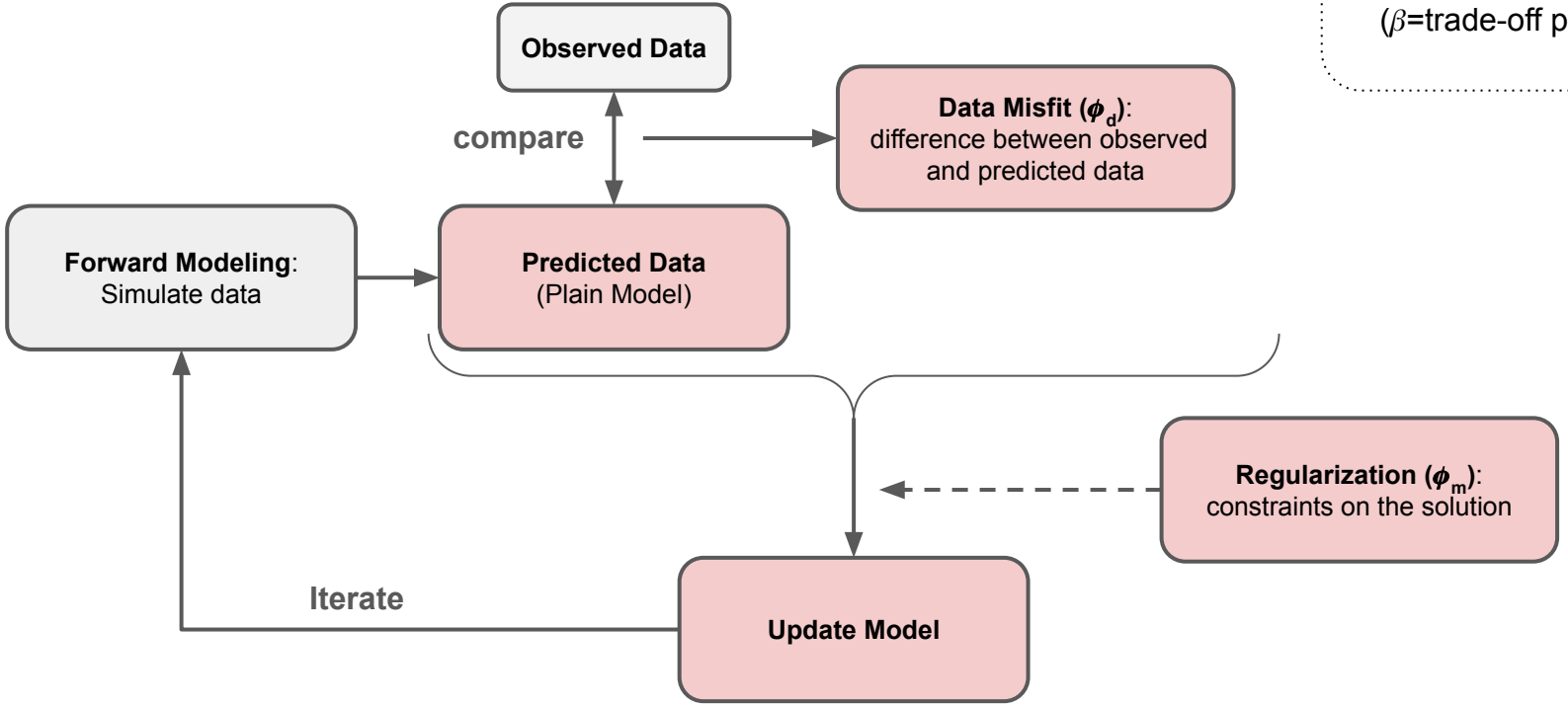

Software System-level diagram

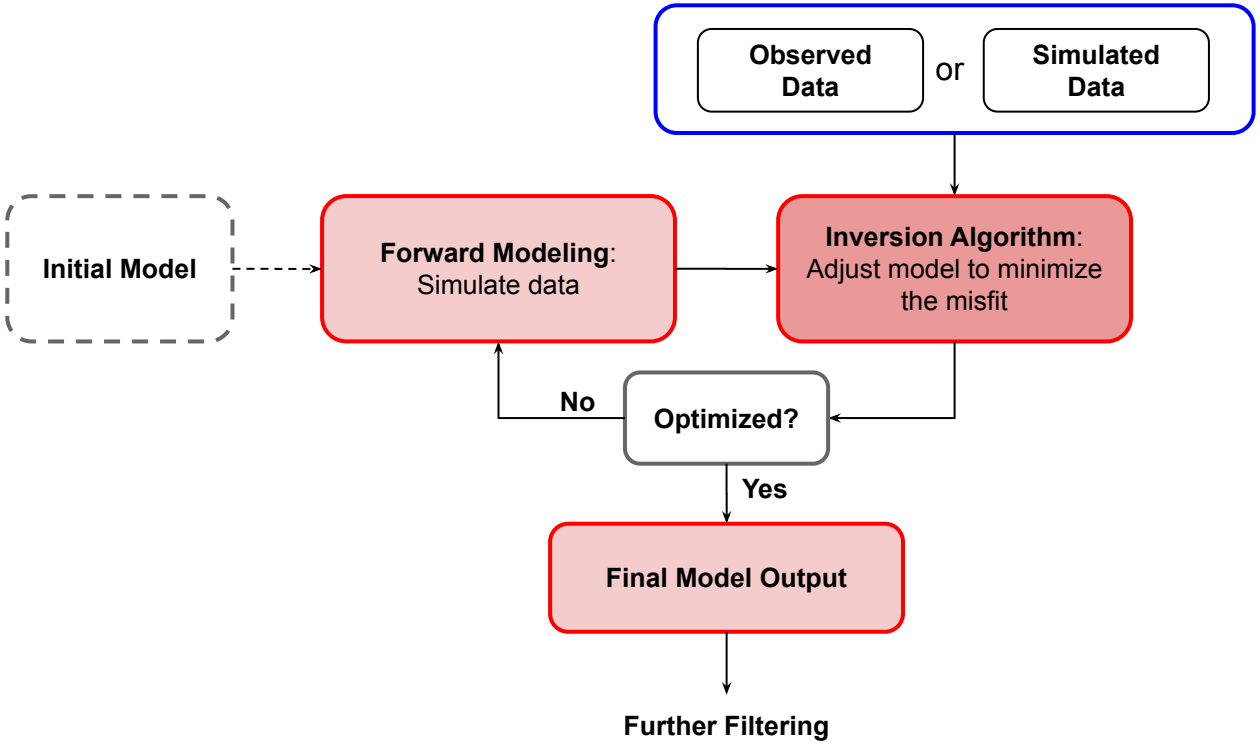

Software System-level diagram

Goal:

Minimize $\boldsymbol{\phi}_d + \beta\, \boldsymbol{\phi}_m$

(β=trade-off parameter)

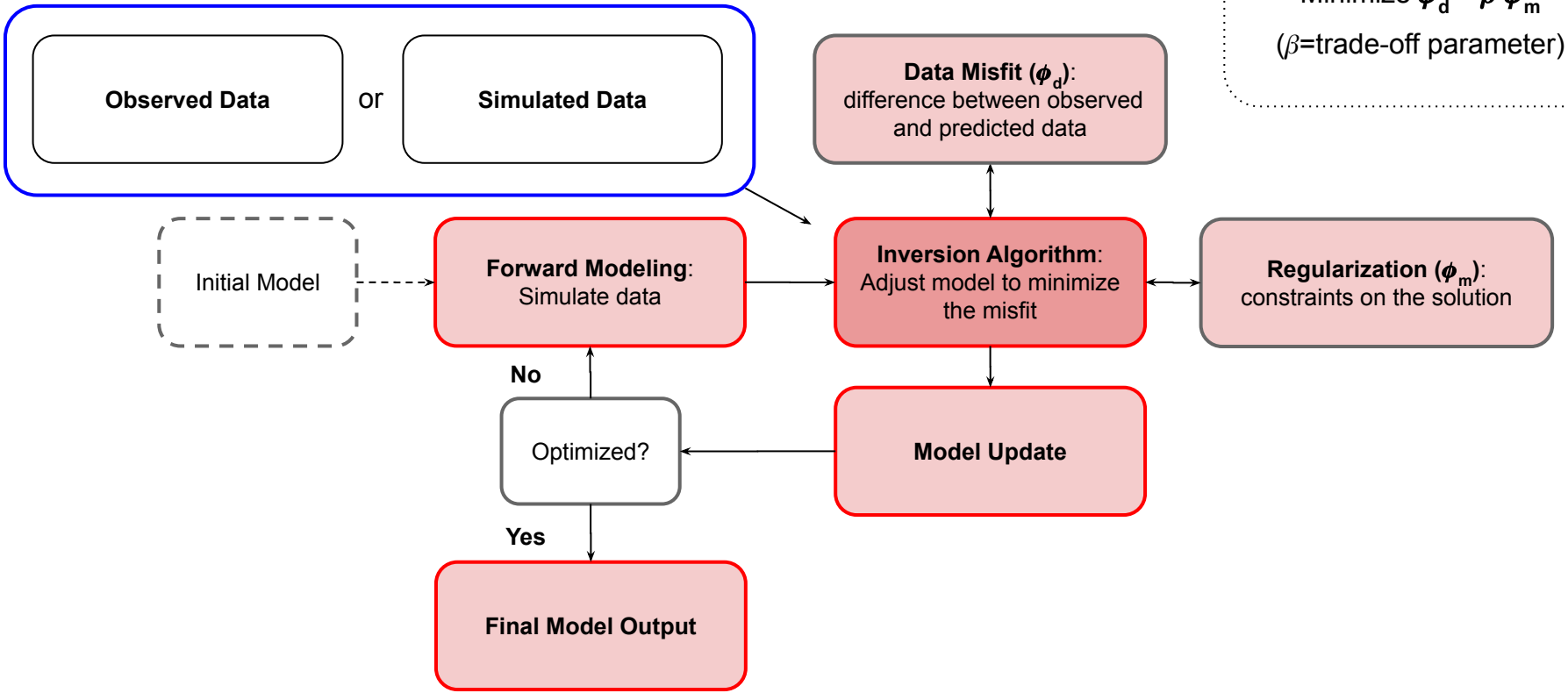

Geophysical Inversion with Synthetic Data

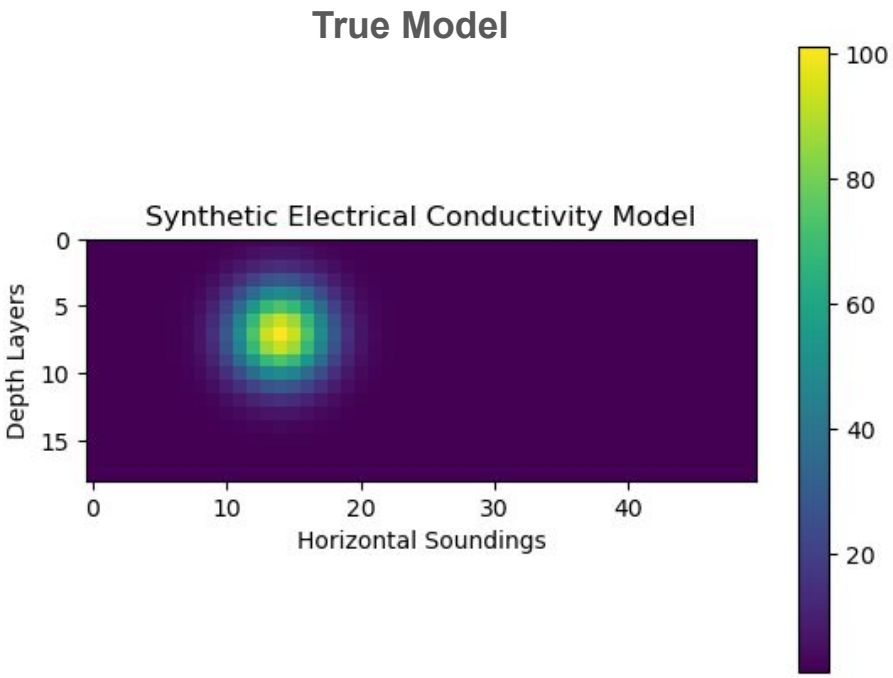

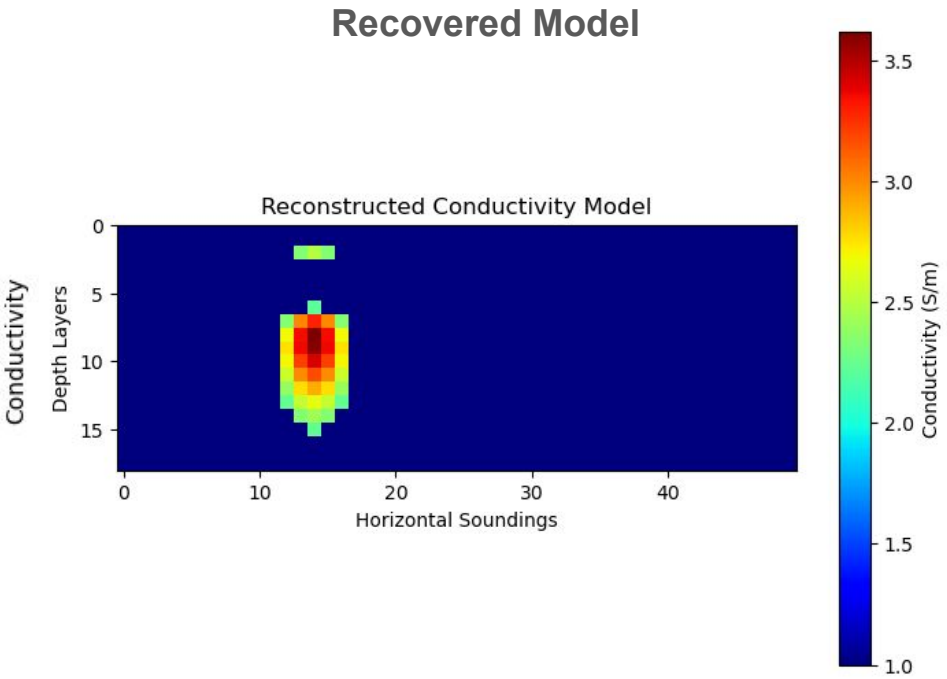

Geophysical Inversion with Synthetic Data

Generated (True) Data

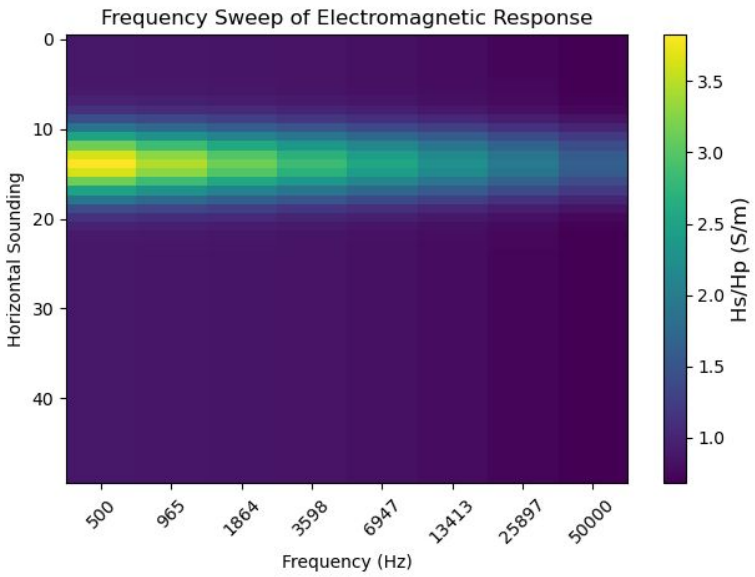

Predicted data

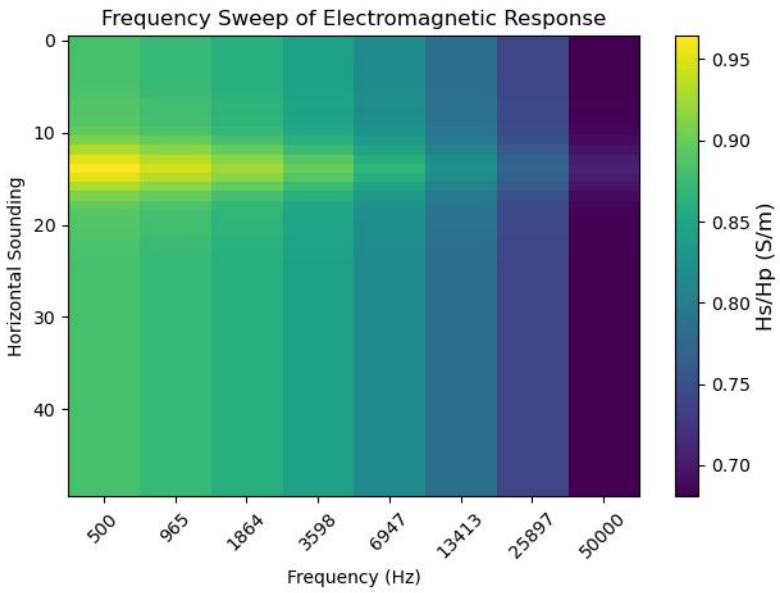

Conclusion

Next Steps:

- Further optimize the inversion algorithm
- Classification of uniaxial objects
- Machine learning diffusion model

Our design successfully demonstrates a viable solution for detecting UXOs, potentially mitigating thousands of deaths globally.

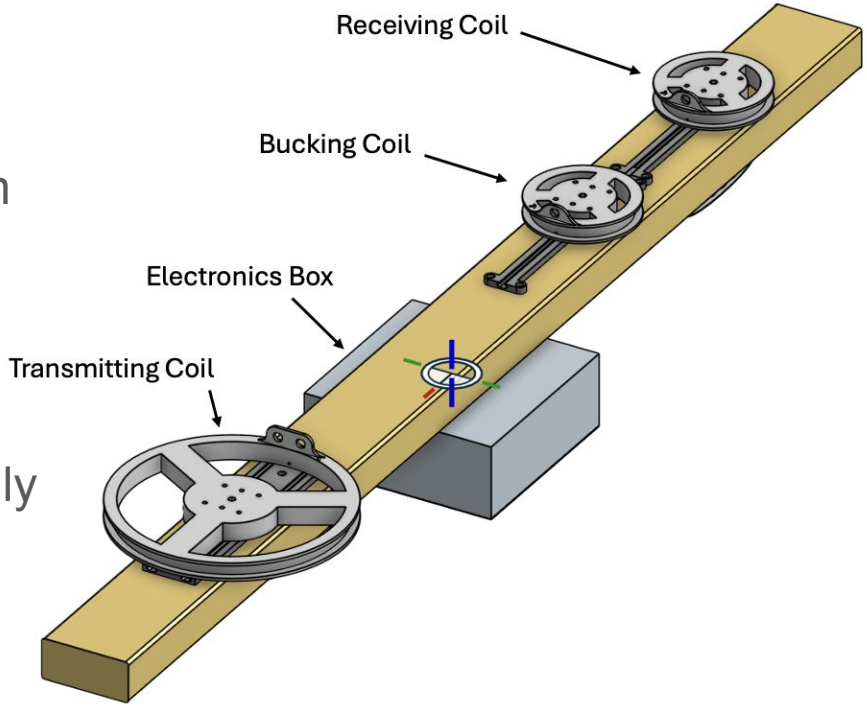

Thank You!

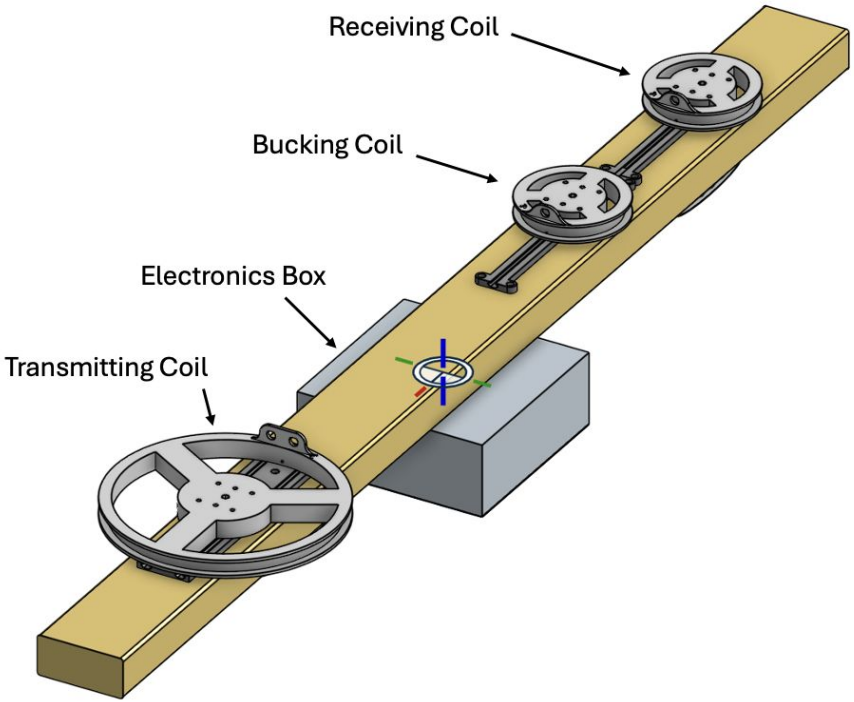
Receiving Coil
Bucking Coil
Electronics Box
Transmitting Coil