MECH 325 - Not So Little Last Minute Things

Sarah Gauthier

October 2022

1 Unit Conversions

$$1 \text{ in} = 2.54 \text{ cm}$$
$$2.2 \text{ lbs} = 1 \text{ kg}$$
$$1 \text{ gallon} = 3.79 \text{ L}$$
$$1 \text{ hp} = 745.7 \text{ W}$$
$$\text{F} = 9/5(^\circ\text{C}) + 32$$
$$1 \text{ mile} = 1.609 \text{ km}$$
$$1 \text{ hp} = 550 \text{ ft-lbs/sec}$$
$$1 \text{ Gal} = 230 \text{ in}^3$$
$$1 \text{ lbf} = 1 \text{ slug} \cdot 32.2\text{ft/s}^2$$
$$1 \text{ lbf} = 1 \text{ lbm}$$

2 Flexible Drives

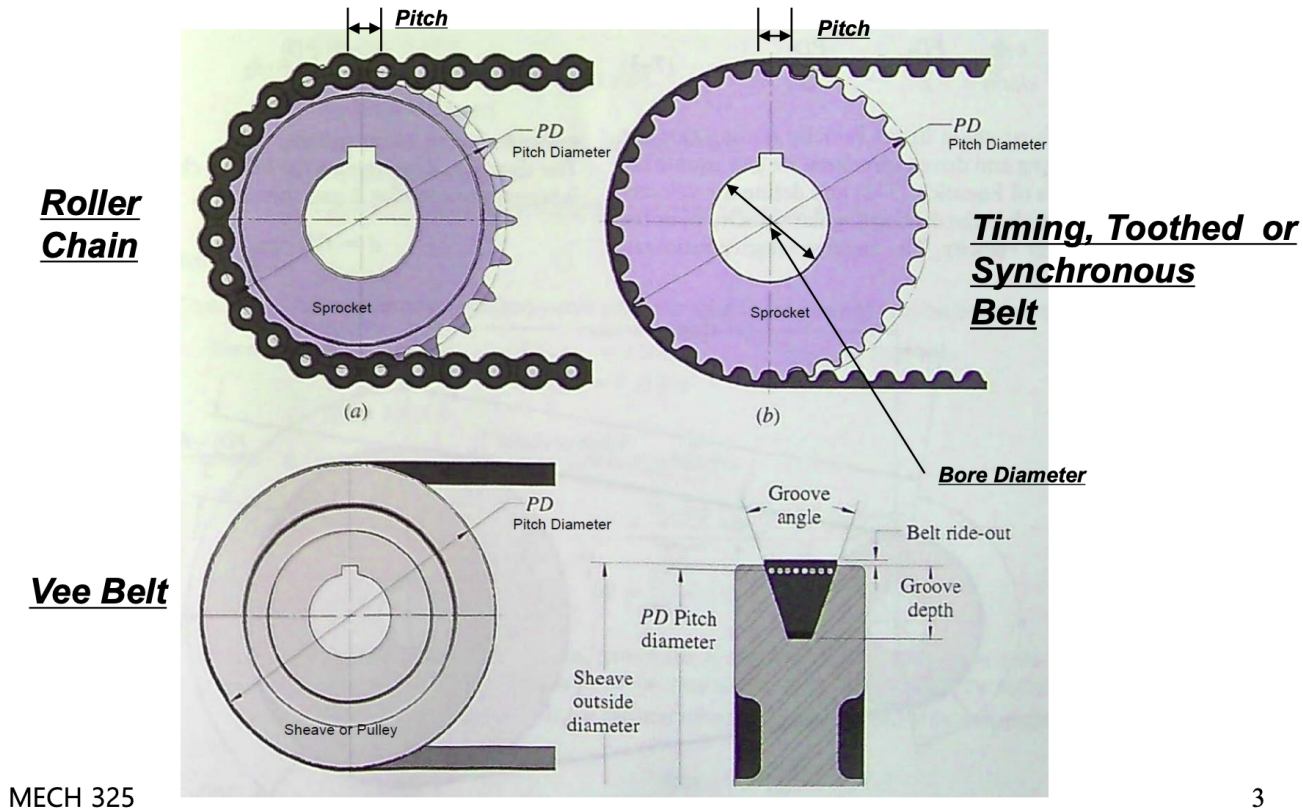

2.1 Pros and Cons

Flat Belts:

- Quiet
- Very little noise; absorb more torsional vibration from the system than V-belts or gears
- Efficient at high speeds (efficiency of about 98% which is about the same as for a gear drive)
- Can transmit large amounts of power over long center distances

V-Belts:

- Used for shorter center distances
- Too long center distances will cause excessive vibration of the slack side, which will shorten the belt life
- Less efficient than flat belts (efficiency is about 70 to 96%)
- A number of them can be used on the same drive, making a multiple drive

Timing/Synchronous Belts:

- Does not stretch or slip so transmits power at a constant angular velocity ratio
- No initial tension required
- No restriction on speed of belt
- Highest belt efficiency with efficiencies from 97 to 99%
- Require no lubrication
- Louder than flat belts but quieter than chain drives
- More expensive
- Short life time - must be replaced periodically

Chain Drives:

- Constant angular velocity ratio since there is no slippage or creep
- Long life: they never fail cause they lack tensile strength; they only fail due to wear or fatigue of rollers
- Noisy
- Require lubrication (life reduced up to 300 times when no lubrication is used)

Wire Rope:

- Must be lubricated
- Operates at slow speeds

2.2 Flat Belts

2.2.1 Formulae

$$\Delta F = F_1 - F_2 = \frac{2T}{d}$$

$$\text{power: } H = \frac{(F_1 - F_2)V}{33000}$$

2.2.2 Graphs and Figures

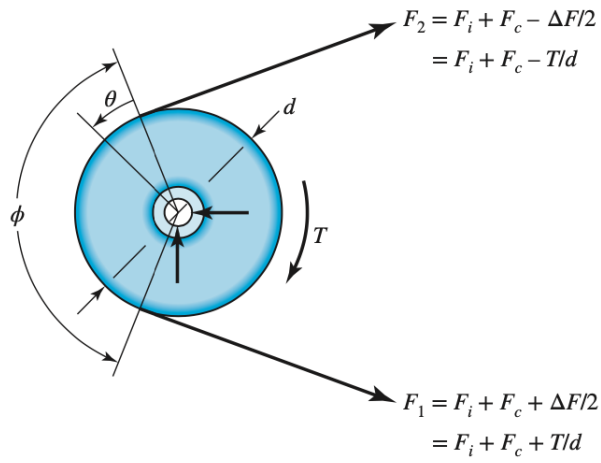

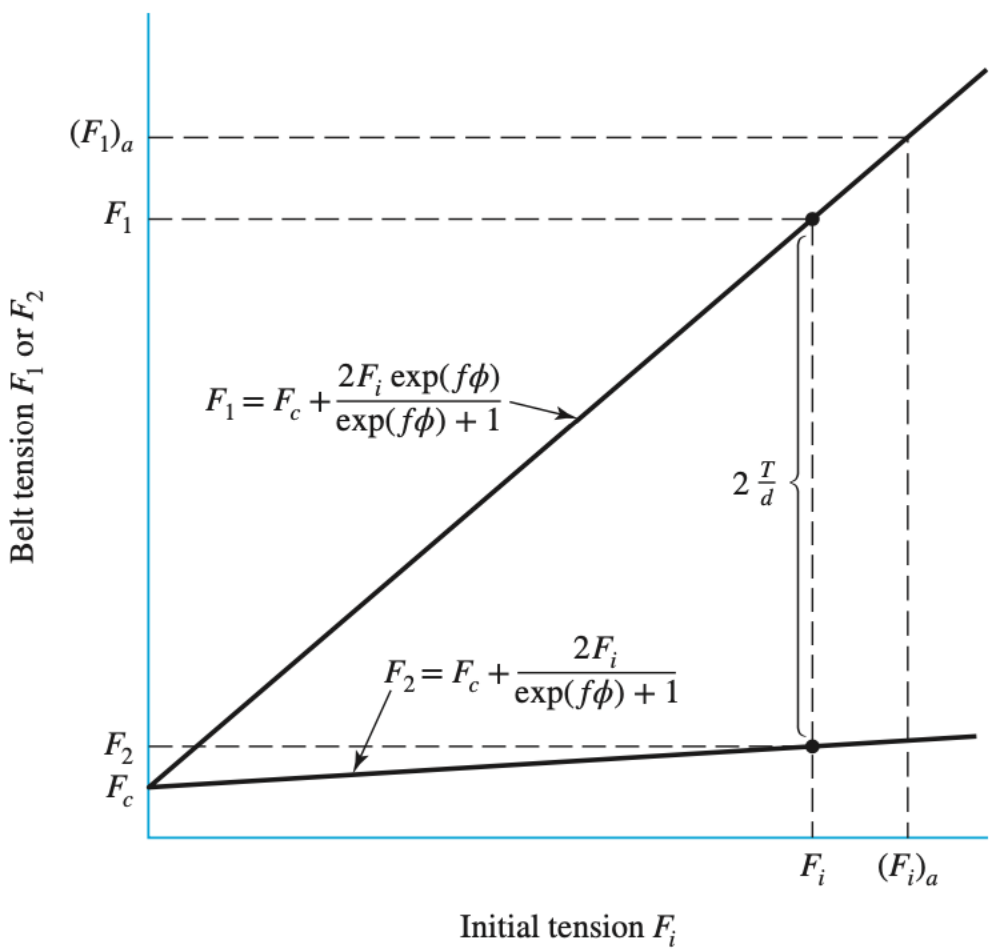

F_i = initial tension
F_1 = tight-side tension
F_2 = loose-side tension

F_c = hoop tension due to centrifugal force
$(F_1)_a$ = allowable largest tension

Important notes:

- Torque is proportional to the initial tension so with no initial tension, no torque can be transmitted
- The initial tension needs to be sufficient so that $F_2 - F_1 = \frac{2T}{d}$. With no torque transmitted, $F_1 = F_2 = F_C$

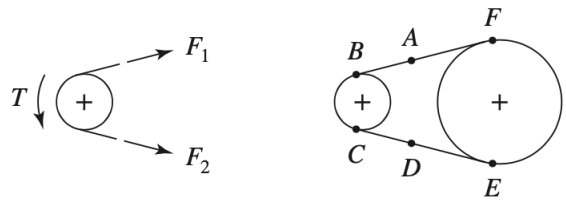

(a)

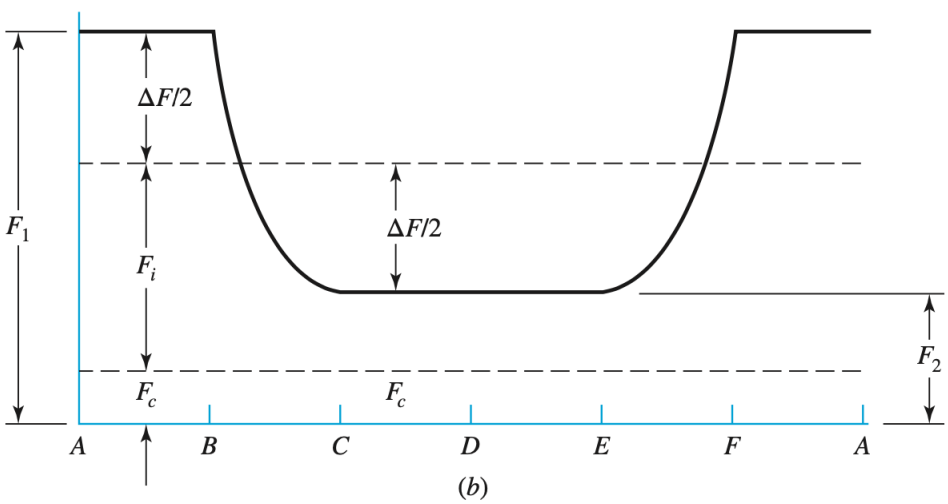

(b)

2.3 V-Belts

2.3.1 Formulae

$$\text{design power: } H_{des} = H_{nom} K_s n_d \tag{1}$$

2.3.2 Graphs and Figures

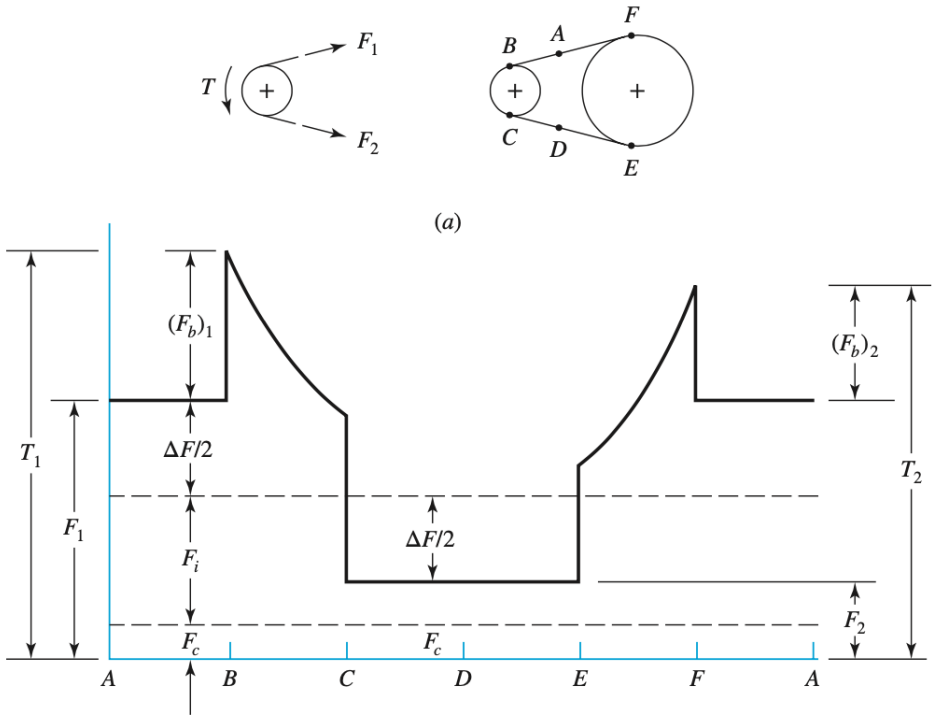

2.4 Timing/Synchronous Belts

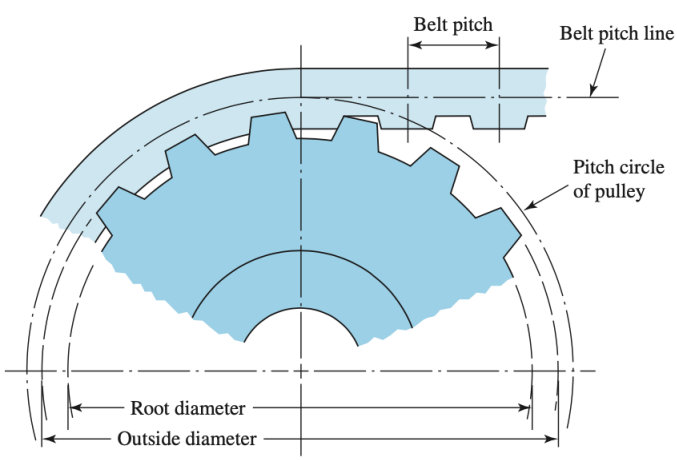

2.5 Chain Drives

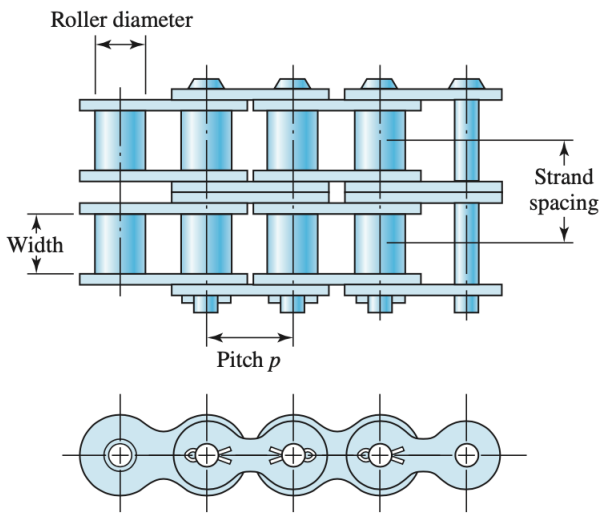

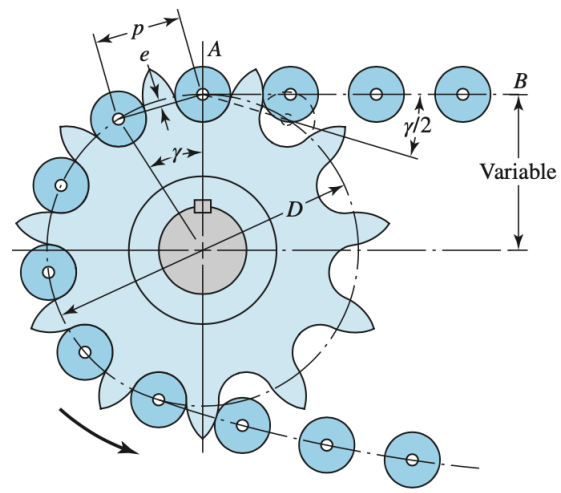

2.5.1 Formulae

$$\text{chain velocity: } V = \frac{Npn}{12}$$

where N = number of sprocket teeth

p = chain pitch (in)

n = sprocket speed (rpm)

$$\text{design power: } H_{des} = H_{nom} K_s n_d$$

2.5.2 Graphs and Figures

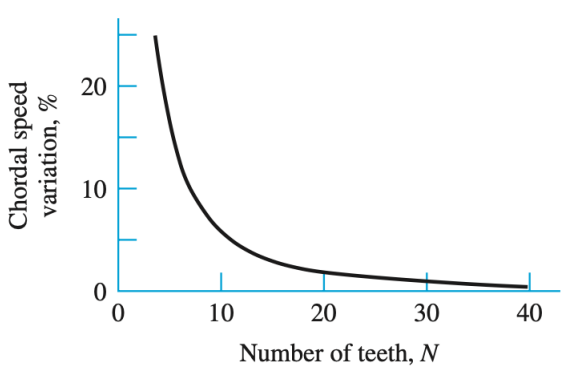

Important notes:

- Chain links moving around the radius of the sprocket causes the linear belt speeds to vary
- The magnitude of speed variation is dependent on the number of sprocket teeth

- Increasing the number of teeth decreases the chordal speed variation
- This is why it is good practice to use a driving sprocket with at least 17 teeth ($< 2\%$ variation)

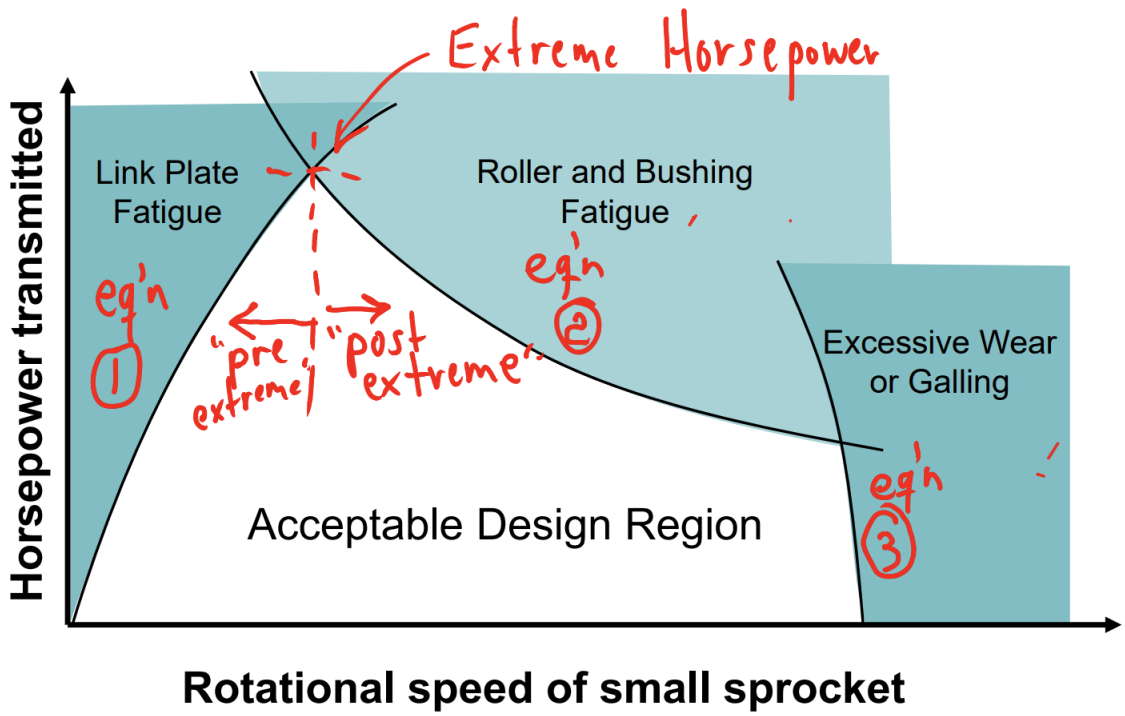

"Galling" is where metals will form a welded bond under stress. There the bonds will undergo stress and fail from erosion.

2.6 Wire Rope

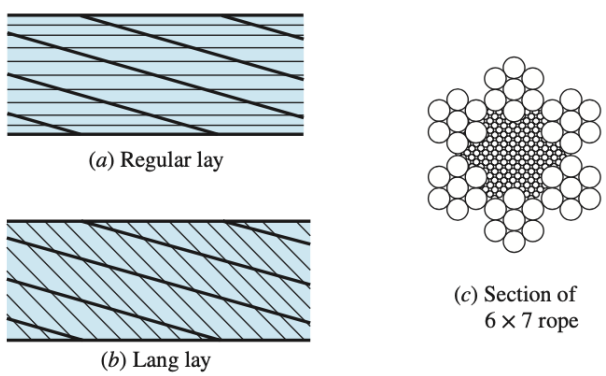

- Regular lay ropes have the wires in the strands twisted in one direction and the strands in the rope twisted in the opposite direction
  - They do not kink and unwind and are easy to handle

- Lang lay ropes have the wires in the strands and the strands in the rope twisted in the same direction
  - They are more resistant to abrasive wear and failure due to fatigue, but they are more likely to kink and untwist
- A wire rope may fail if the static load it is supporting exceeds the ultimate strength of the rope. It is best to use a factor of safety of 5 or more for average operation.
- It is best to use a safety of factor of around 10 if human lives are at stake

2.6.1 Graphs and Figures

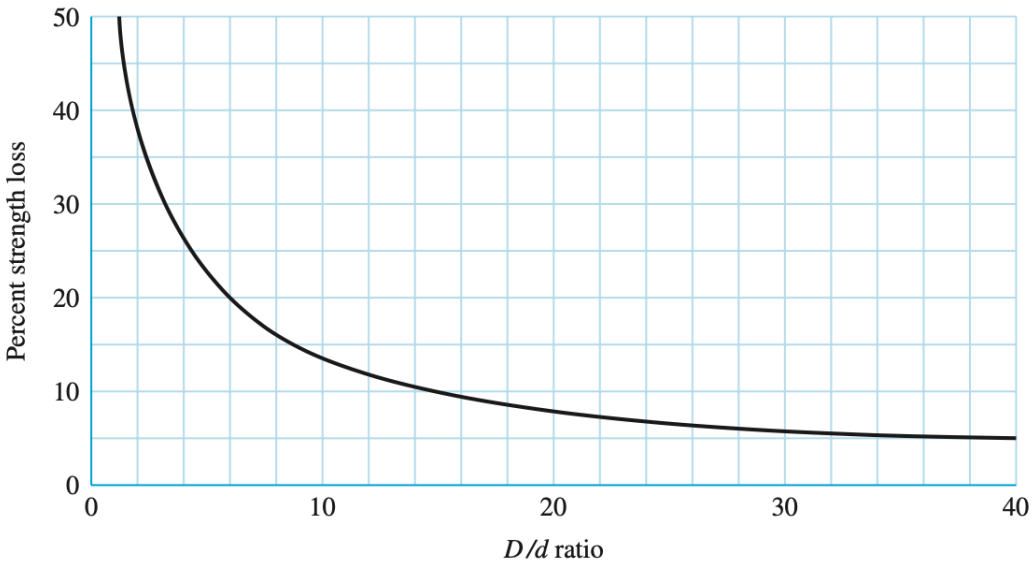

- It is best to increase the D/d (sheave diameter/rope diameter) ratio as much as possible to not reduce the strength of the rope by too much

3 Gear Drives

3.1 Types of Gears

Spur Gears:

- Teeth parallel to axis of rotation
- Transmits motion between parallel shafts

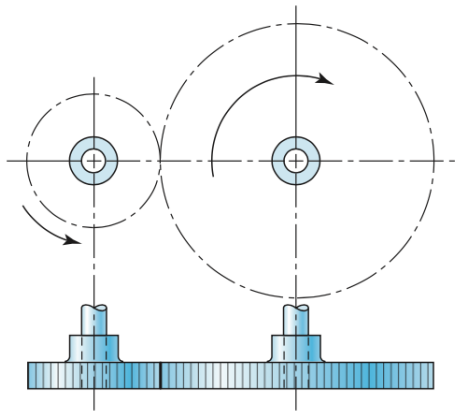

Helical Gears:

- Like spur gears but teeth are angled
- Not as noisy as spur gears because of more gradual engagement of teeth during meshing
- Sometimes used to transmit motion between non-parallel shafts

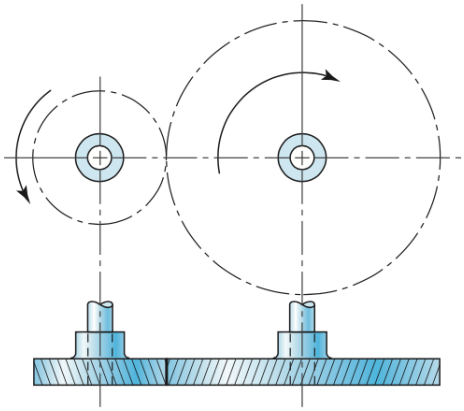

Bevel Gears:

- Teeth on conical surfaces
- Used mostly for transmitting motion between intersection shafts
- Spiral bevel gears are cut so the teeth form circular arcs (rounded teeth)
- Hypoid bevel gears are like spiral bevel gears except the shafts are offset and non-intersecting

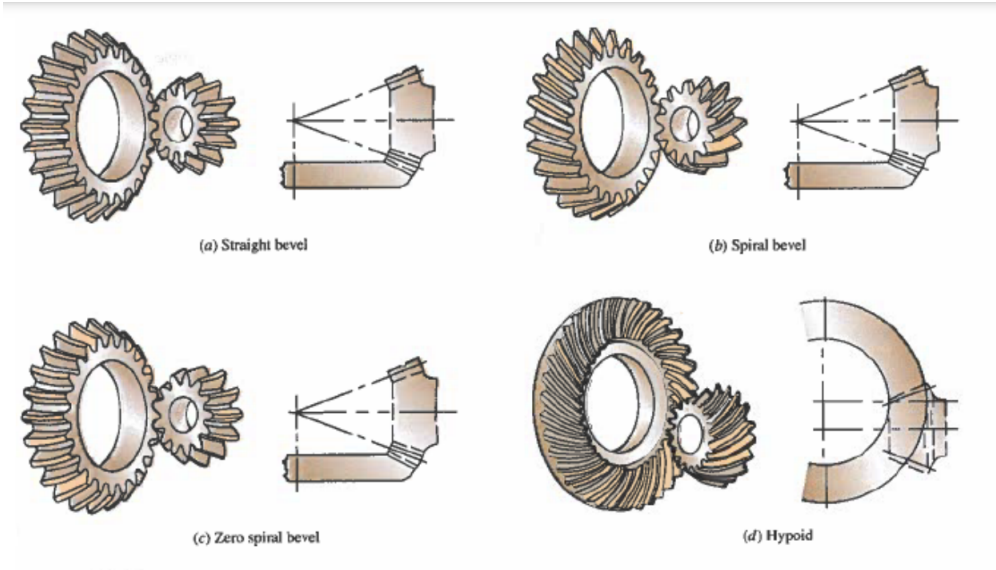

Worm Gears:

- Direction of rotation of the worm gear depends on direction of rotation of the worm and if the worm teeth are cut right-hand or left-hand
- Used when the speed ratio is high, say 3 or higher

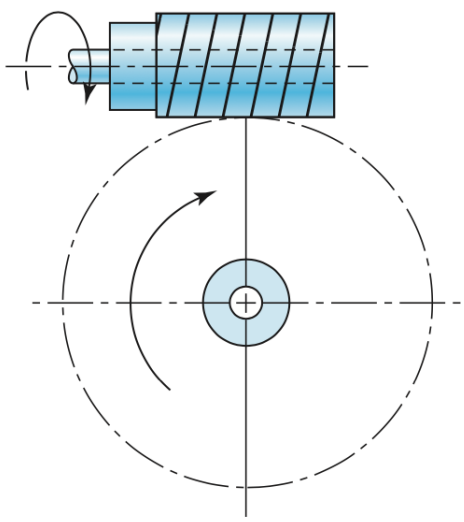

3.2 Nomenclature

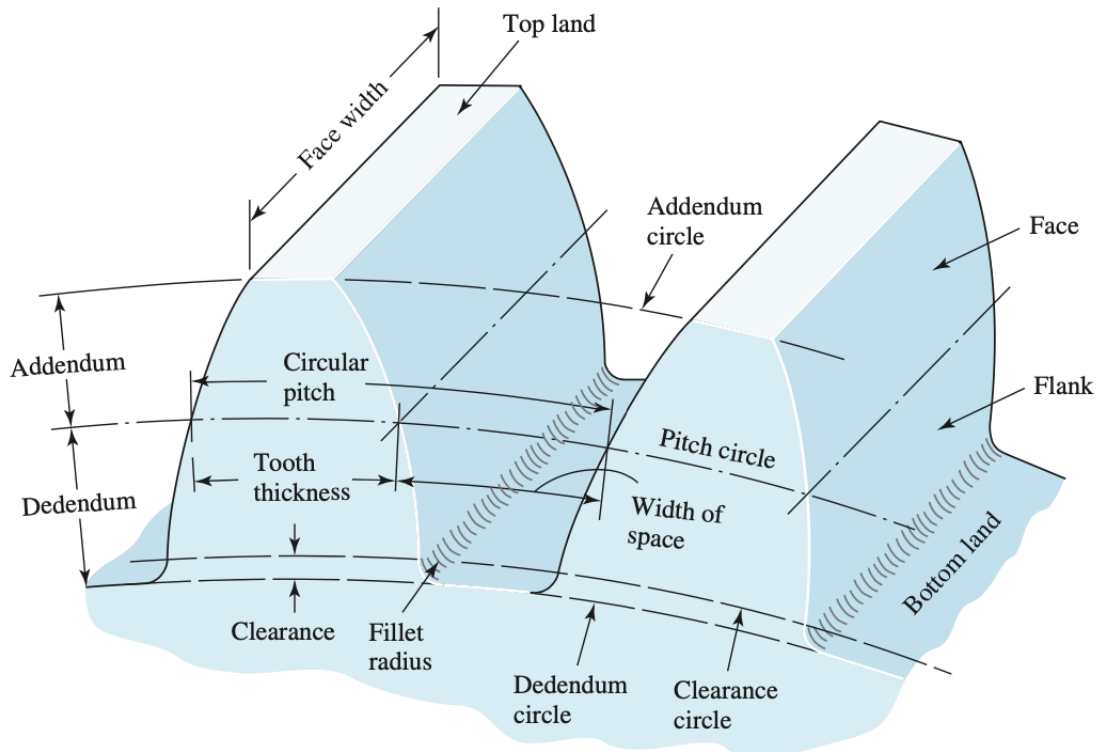

3.3 General Formulae

$$\text{diametral pitch: } P = \frac{N}{d}$$

$$\text{module (mm): } m = \frac{d}{N}$$

$$\text{circular pitch: } p = \frac{\pi d}{N} = \pi m$$

$$pP = \pi$$

$$\text{angular velocity ratio: } \frac{\omega_1}{\omega_2} = \frac{r_2}{r_1}$$

$$\text{pitch line velocity: } V = r_1\omega_1$$

$$\text{torque: } T = F_t r$$

$$\text{power: } H = T\omega$$

$$\text{power: } F_t r\omega$$

3.4 Involute Profile

- The involute profile is a tooth profile that is widely used to produce a constant angular velocity ratio during meshing of two gear teeth

- It is universally used for gear teeth

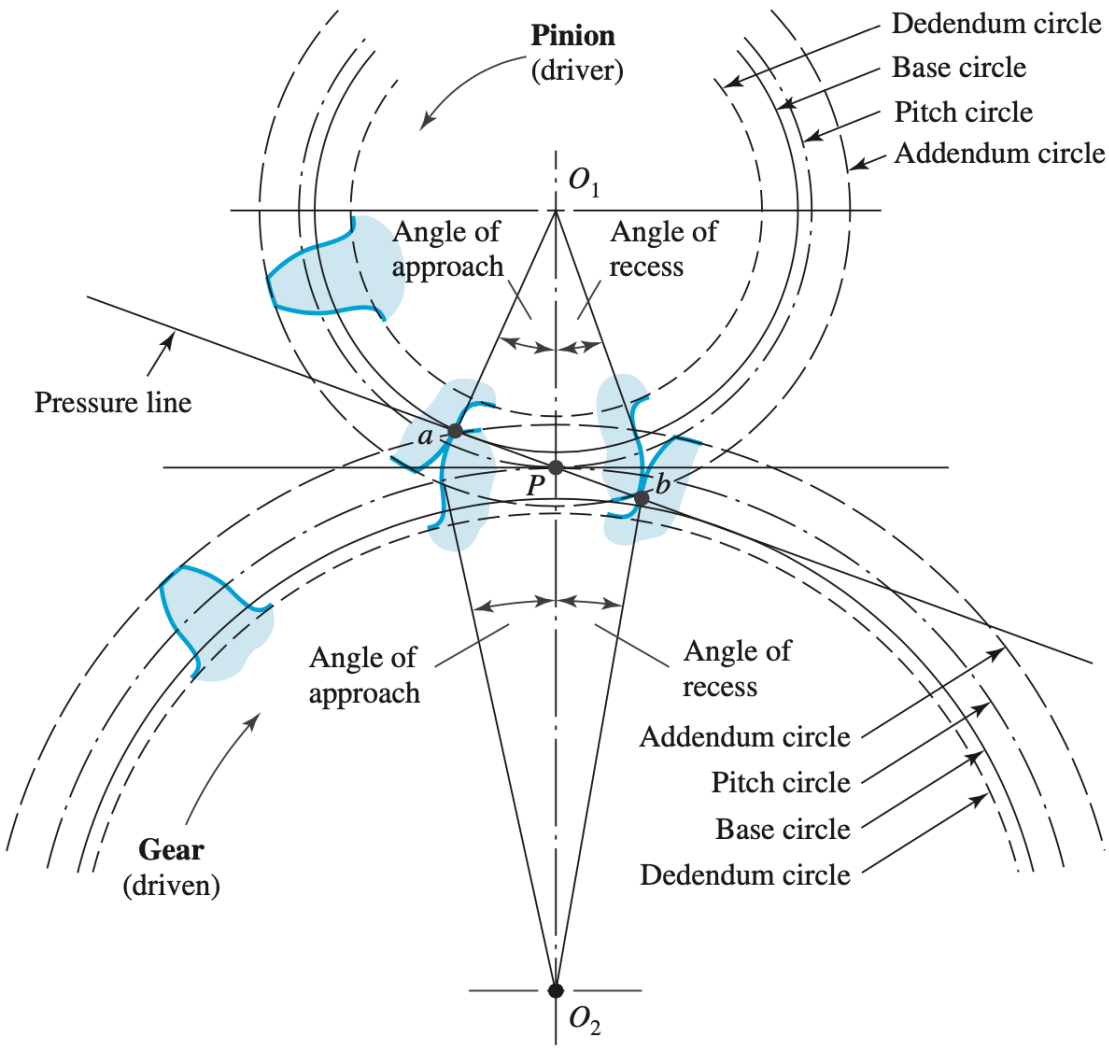

- Contact begins when the tip of the driven tooth makes contact with the flank (base circle) of the driving tooth
- This is also the point where the addendum of the driven gear intersects with the driving tooth of the pinion (point a)
- The point of contact will slide along the pressure line until the addendum circle of the pinion crosses the pressure line

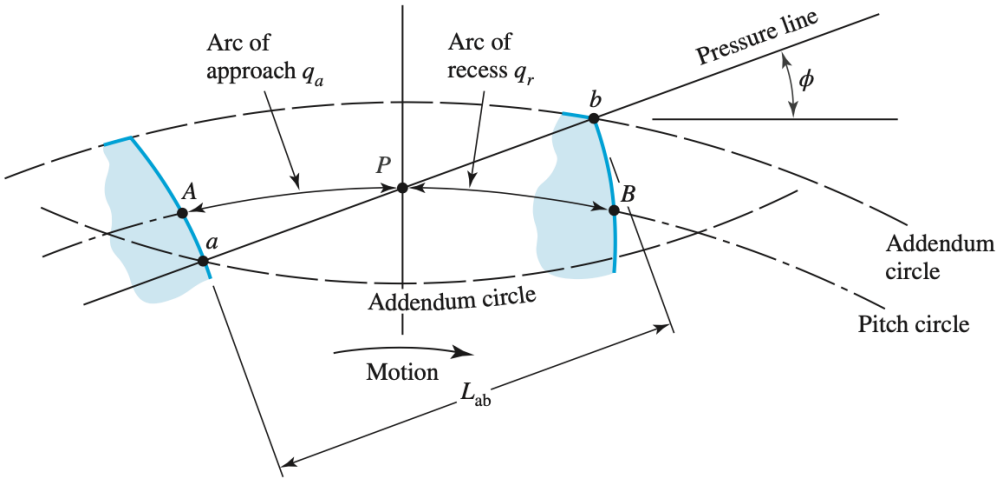

The contact ratio is the of the arc of action and the circular pitch:

$$\text{gear contact ratio: } m_c = \frac{q_t}{p}$$

It indicates the average number of pairs of teeth in contact. If it is greater than one it means there's two driven teeth in contact with one driving teeth.
It should be less than 1.2.

3.4.1 Interference

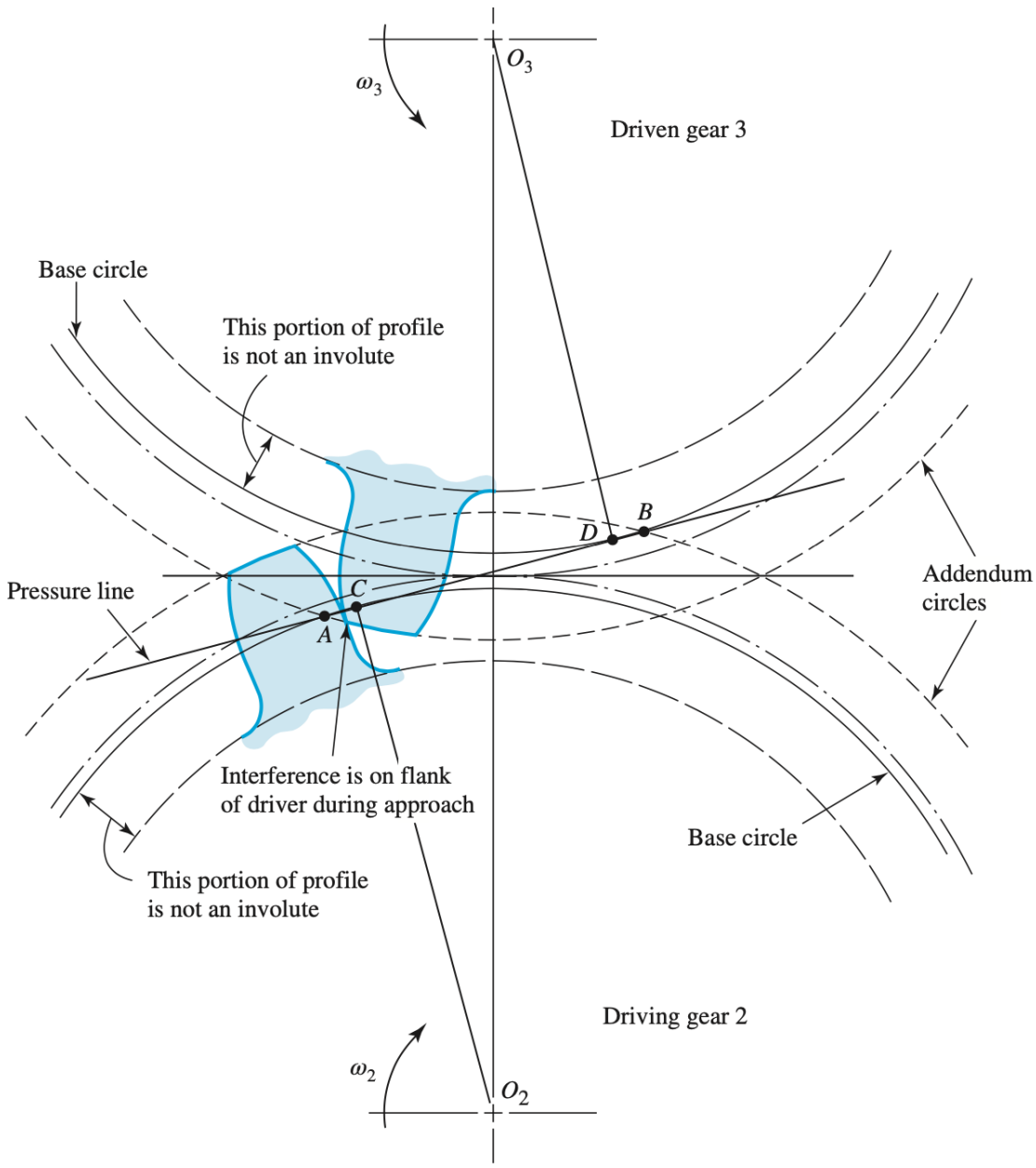

Interference occurs when the driven tooth makes contact with the flank of the driving tooth (this is below the base circle of the driving gear, in the non-involute portion of the tooth)

- Interference can be minimized and eliminated by using more teeth on the pinion (generally 12 teeth or more)
- Interference can also be reduced by using a larger pressure angle (generally 25°)
- However, increasing the pressure angle increases the frictional forces and bearing loads. It reduces the transmitted force

3.5 Parallel Helical Gears

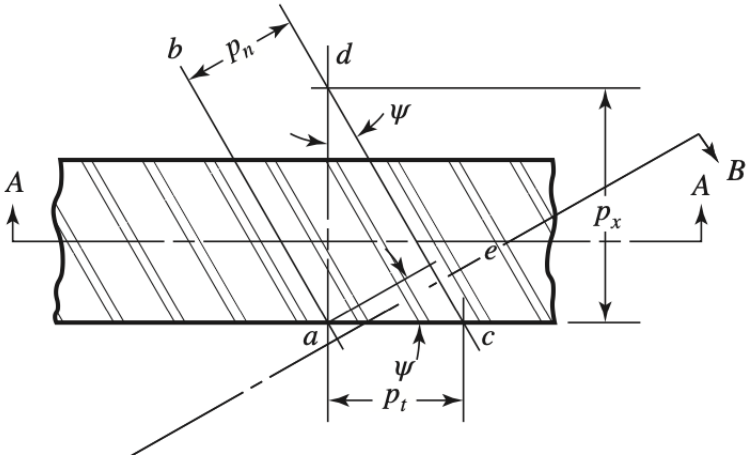

$$p_n = p_t \cos(\psi)$$
$$p_x = \frac{p_t}{tan(\psi)}$$

3.6 Gear Trains

$$e = \frac{\text{product of driving tooth numbers}}{\text{product of driven tooth numbers}}$$
$$n_L = en_F$$

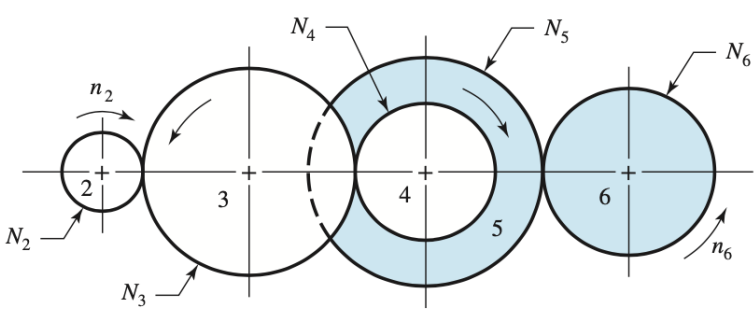

In this example, the driving gears are gears 2, 3, and 5 and the driven gears are gears 3, 4 and 6

3.7 Gear Forces

3.7.1 Spur Gear Forces

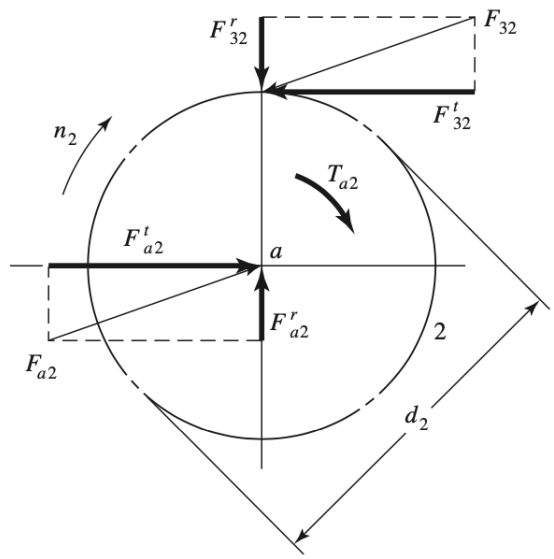

3.7.2 Bevel Gear Forces

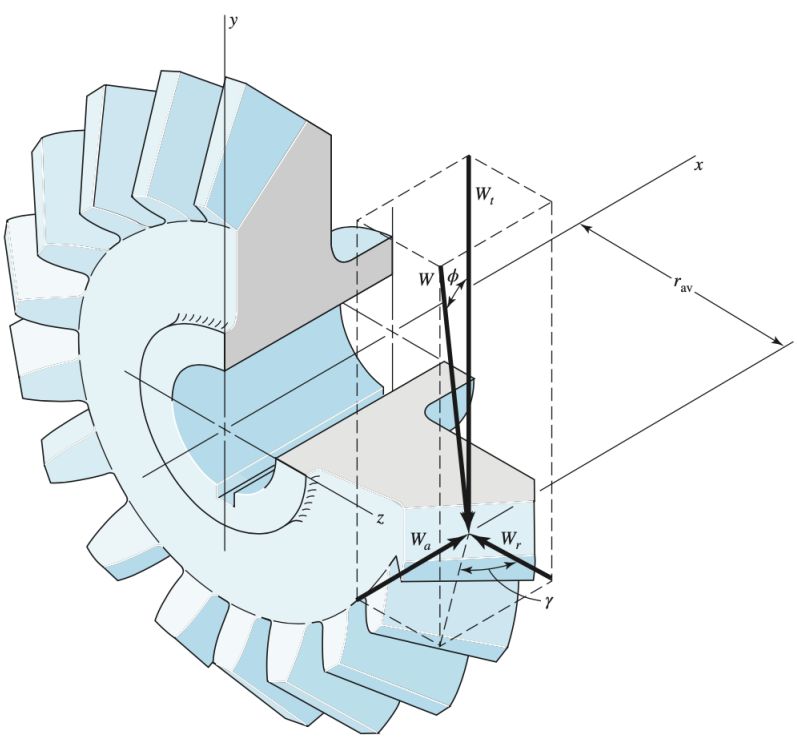

3.7.3 Helical Gear Forces

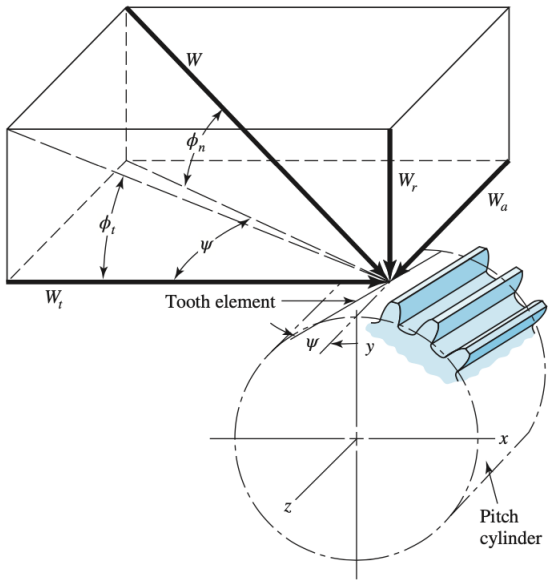

3.7.4 Worm Gear Forces

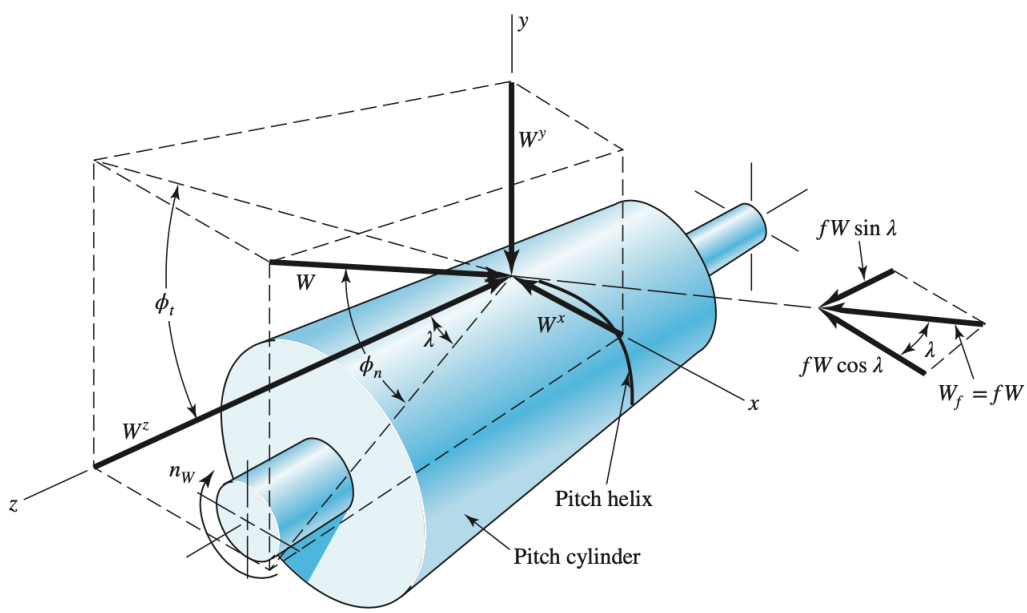

4 Fluid Power

Advantages:

- Easy speed control
- Easy direction control
- Adaptable circuit
- Can handle overloads and shocks

Cons:

- High maintenance
- High skill required
- Must be kept clean
- Expensive
- Energy inefficient

Characteristics

PNEUMATICS	***HYDRAULICS***
• Compressible fluid	• Incompressible fluid.
• Low pressure (~100psi)	• High pressure (~1,000 to 10,000 psi)
• Less expensive	• High loads and power in compact devices
• Less maintenance	• More expensive
• Less control	• High maintenance
• Better in dirty environment	• Easily controlled
• High speed	• Need clean internal environment

4.0.1 Basics

- P = F/A
- Pressure is conserved throughout a fluid so $\frac{F_1}{A_1} = \frac{F_2}{A_2}$ (only true in stationary fluid)
- However there is pressure loss due to flow proportional to the length of the pipe that the fluid flows through

4.0.2 Circuit Components

- Double acting cylinder

- Positive displacement reciprocating pump

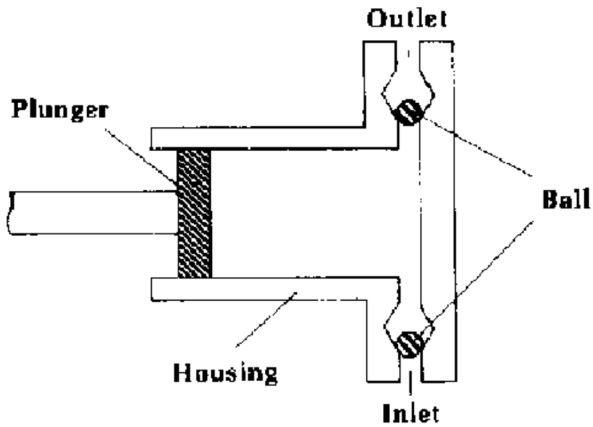

- Check valve

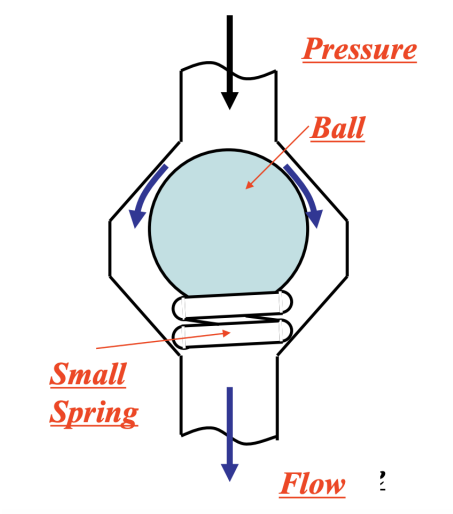

- Pressure control valve

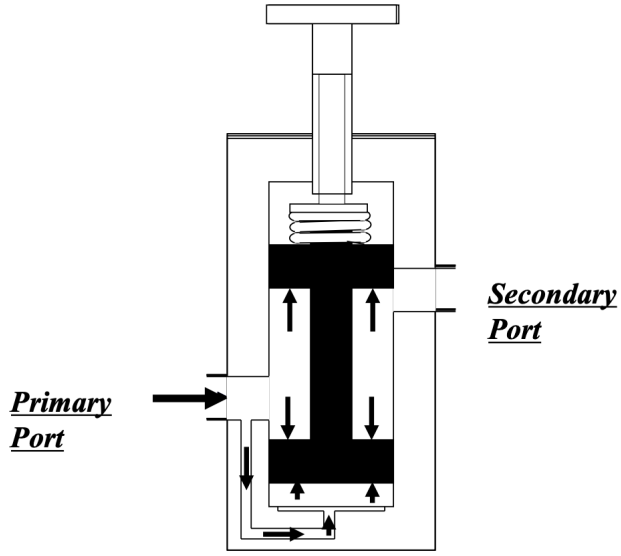

- Flow control valve

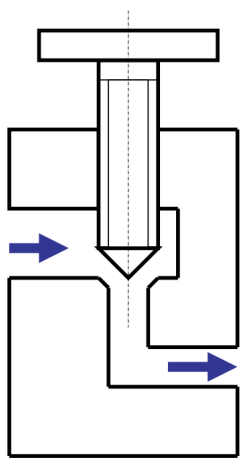

- Directional control valve

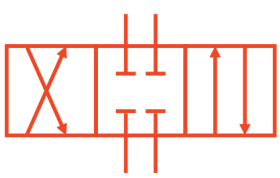

5 Bearings

5.0.1 Lubrication

Plain surface bearings:

- Two surface move relative to each other without rolling contact (sliding contact)
- Example: bushings
- lubricant is required to reduce friction, inhibit wear, protect the bearing surfaces against corrosion and may also be needed to provide cooling

There are 3 types of lubrication:

- **Boundary lubrication:** actual contact between solid surfaces of moving and stationary parts of bearing, with a film of lubrication present
  - The most surface wear
- **Mixed-film lubrication:** there's a transition zone between boundary and full-film lubrication
  - Mild surface wear
- **Full-film (or hydrodynamic) lubrication:** moving and stationary part of bearing are fully separated by a film of lubricant (no metal to metal contact)
  - Most desirable lubrication type
  - Occurs for light loads, high relative speed between moving and stationary parts and with the presence of high-viscosity lubricant in the bearing
  - Very little surface wear
  - Require the existence of an adequate supply of lubricant at all times

Bearing Parameter, $\mu n/p$:

- Evaluates combined effect of viscosity of the lubricant (μ), the rotational speed of the bearing (n) and the bearing load by the pressure (p)
- It is dimensionless

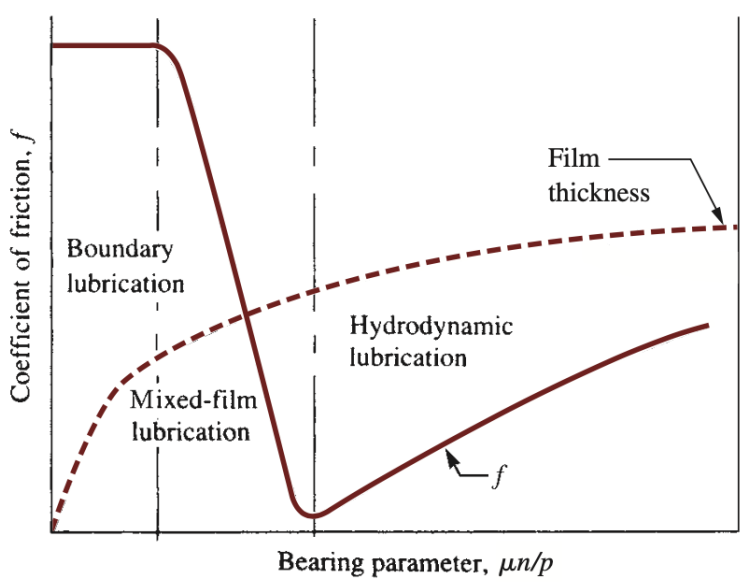

This graph tells us the type of lubrication based on the bearing parameter.

It is recommended that designers avoid the mixed-film zone because it is virtually impossible to predict the performance of the bearing system due to the steepness of the curve at that location.

- As a general guideline, $\mu n/p \geq 1.7(10^{-6})$ to reach hydrodynamic lubrication

5.1 Bushings

Also called **boundary-lubricated bearings**. A smooth hollow cylinder through which a shaft that rotates slowly, oscillates, or slides linearly passes. Occur in hydro dynamically lubricated bearings when:

- they are starting or stopping often
- the load increases
- the supply of lubricant decreases
- whenever other operating changes happen to occur

5.2 Rolling-Contact Bearings

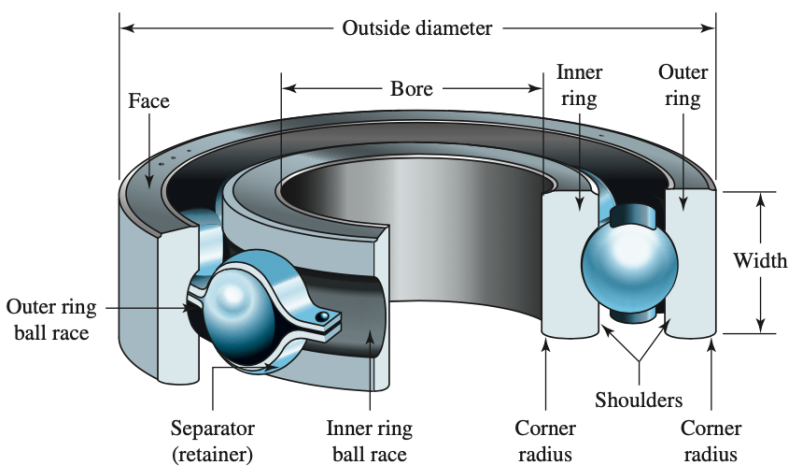

TABLE 14–1 Comparison of Bearing Types

Bearing type	Radial load capacity	Thrust load capacity	Misalignment capability
Single-row, deep-groove ball	Good	Fair	Fair
Double-row, deep-groove ball	Excellent	Good	Fair
Angular contact	Good	Excellent	Poor
Cylindrical roller	Excellent	Poor	Fair
Needle	Excellent	Poor	Poor
Spherical roller	Excellent	Fair/good	Excellent
Tapered roller	Excellent	Excellent	Poor

- **Radial loads:** act towards center of bearing along radius

- **Thrust loads:** act parallel to the axis of the shaft
- **Misalignment:** refers to the angular deviation of the axis of the shaft at the bearing from the true axis of the bearing itself
- An excellent rating for misalignment indicates that the bearing can accommodate up to 4.0° or 0.07 rad of angular deviation. A bearing with a fair rating can withstand up to 0.15°, while a poor rating indicates that rigid shafts with less than 0.05° of misalignment are required

Single-row, deep-grove ball bearing:

- Sometimes called Conrad bearings
- Contact between a ball and the race is at a very small area, so very high local contact stresses occur
- To increase capacity, increase number of balls or use larger balls in larger diameter races

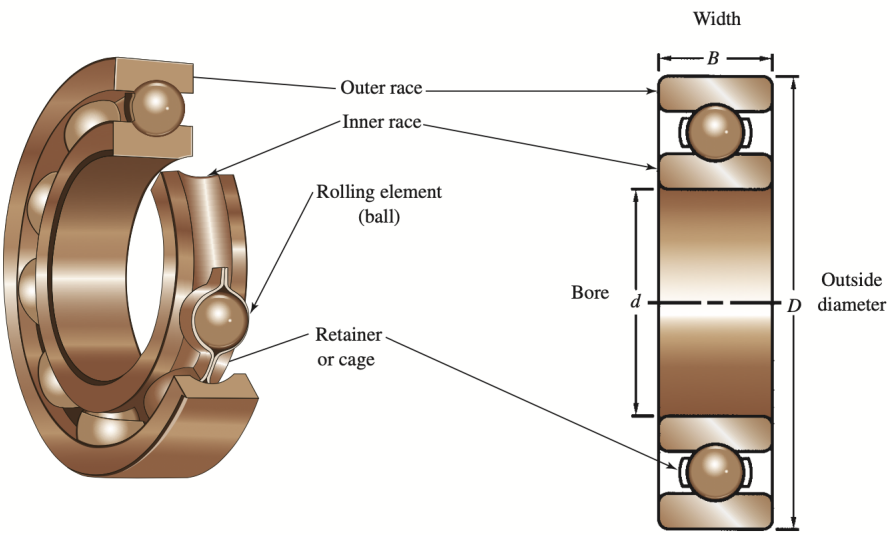

Double-row, deep-grove ball bearing:

- Same as the single-row version but with a second row of balls
- Increased radial load-carrying capacity because more balls share the load

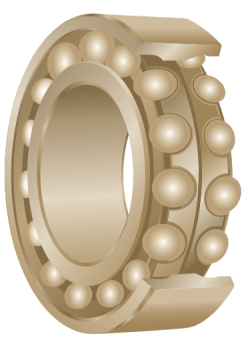

Angular contact ball bearing:

- One side of each race is higher to allow for greater thrust load-carrying capacity

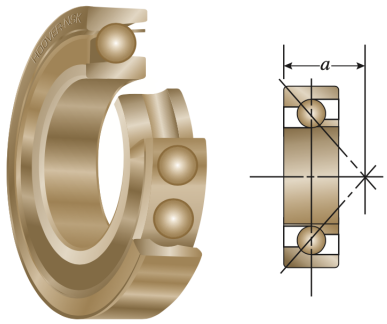

Cylindrical roller bearing:

- Spherical balls of previous bearing types are replaced by rolling cylinders
- Great radial load capacity
- Contact stresses within the bearing are lower since there is more contact area between the rolling cylinders and the races
- Very low thrust load capacity (recommended that no thrust load be applied)

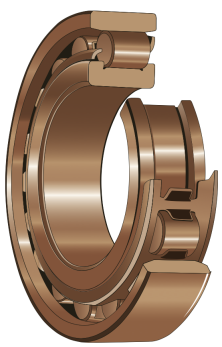

Needle bearing:

- Like cylindrical roller bearings but with much smaller diameter rollers (so they kind of look like needles)
- Needs much smaller radial space than other types of bearing to carry a given load
- Poor misalignment capabilities

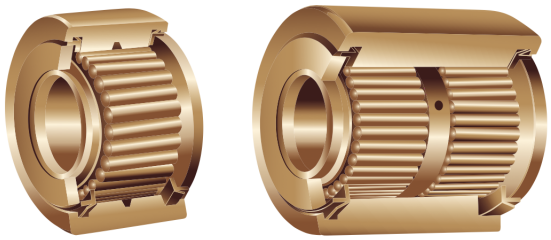

(*a*) Single- and double-row needle bearings

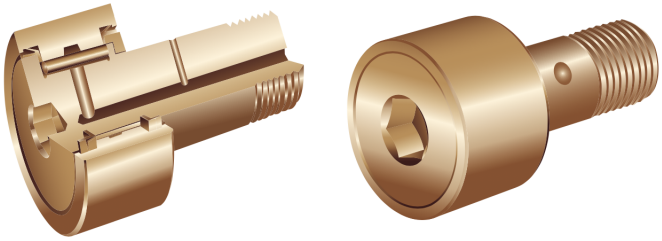

(*b*) Needle bearings adapted to cam followers

Spherical roller bearing:

- A self-aligning bearing with excellent misalignment capabilities

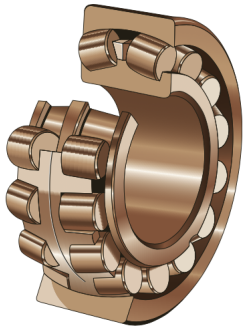

Tapered roller bearing:

- Can take very high thrust and radial loads
- Often used in wheel bearings for vehicles and mobile equipment and in heavy-duty machinery

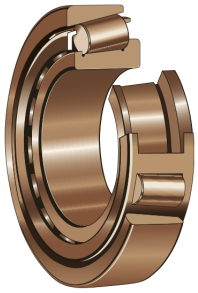

5.2.1 Thrust Bearings

- Resist only thrust loads (take very little to no radial loads)
- The design of thrust bearings only depends on the magnitude of the thrust load and the design life

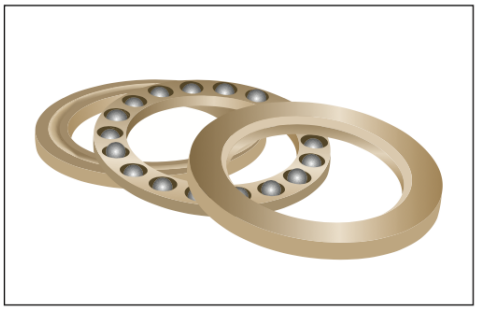

(*a*) Example of ball thrust bearings

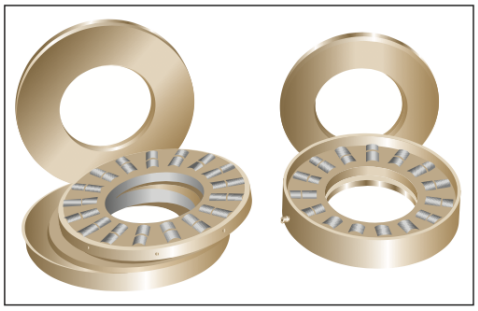

(*c*) Examples of roller thrust bearings

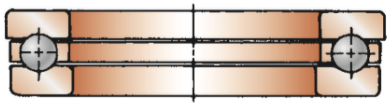

(*b*) Typical cross section of ball thrust bearing

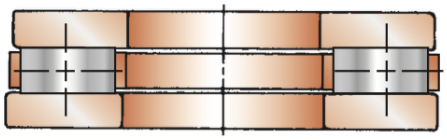

(*d*) Standard cylindrical roller-thrust bearing

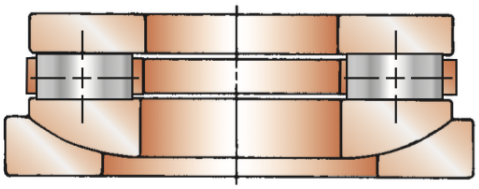

(*e*) Self-aligning thrust bearing

5.2.2 Bearing Ratings

- Basic static load rating (C_0) is the load that the bearing can withstand without permanent deformation of any component
- Rated life (L_{10} *life*) is the life that 90% of the bearings would achieve successfully at a rated load (or the life that 10% of the bearings would not achieve)
- Basic dynamic load rating (C_{10}) is the load to which the bearings can be subjected while achieving a rated life (L_{10}) of 1 million revolutions

5.2.3 Bearing Load and Life Relationship

- All bearings eventually fail due to fatigue because of high contact stresses. We can predict the lifetime of a bearing using the following relation:

$$\frac{L_2}{L_1} = (\frac{P_1}{P_2})^k$$

where L_1 is the manufacturer's rating life,
P_1 is the basic dynamic load rating,
$k = 3$ for ball bearings,
$k = 3.33$ for roller bearings

6 Shaft Accessories

Set Screws:

- Tor resisting torque and axial forces
- $F_{max} = \frac{2T}{D}$

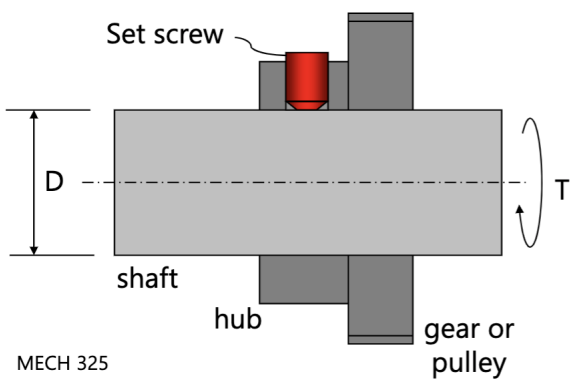

Pins:

- Single shear force: $\frac{2T}{D}$
- Double shear force: $\frac{T}{D}$

6.1 Keys

Purpose is to transmit torque.

- $F = \frac{2T}{D}$

Parallel Keys:

- Includes square and rectangular keys
- Square key is the most popular type of key
- Rectangular keys are recommended for larger shafts

- The width is approximately one-quarter of the diameter of the shaft

Types of Keys:

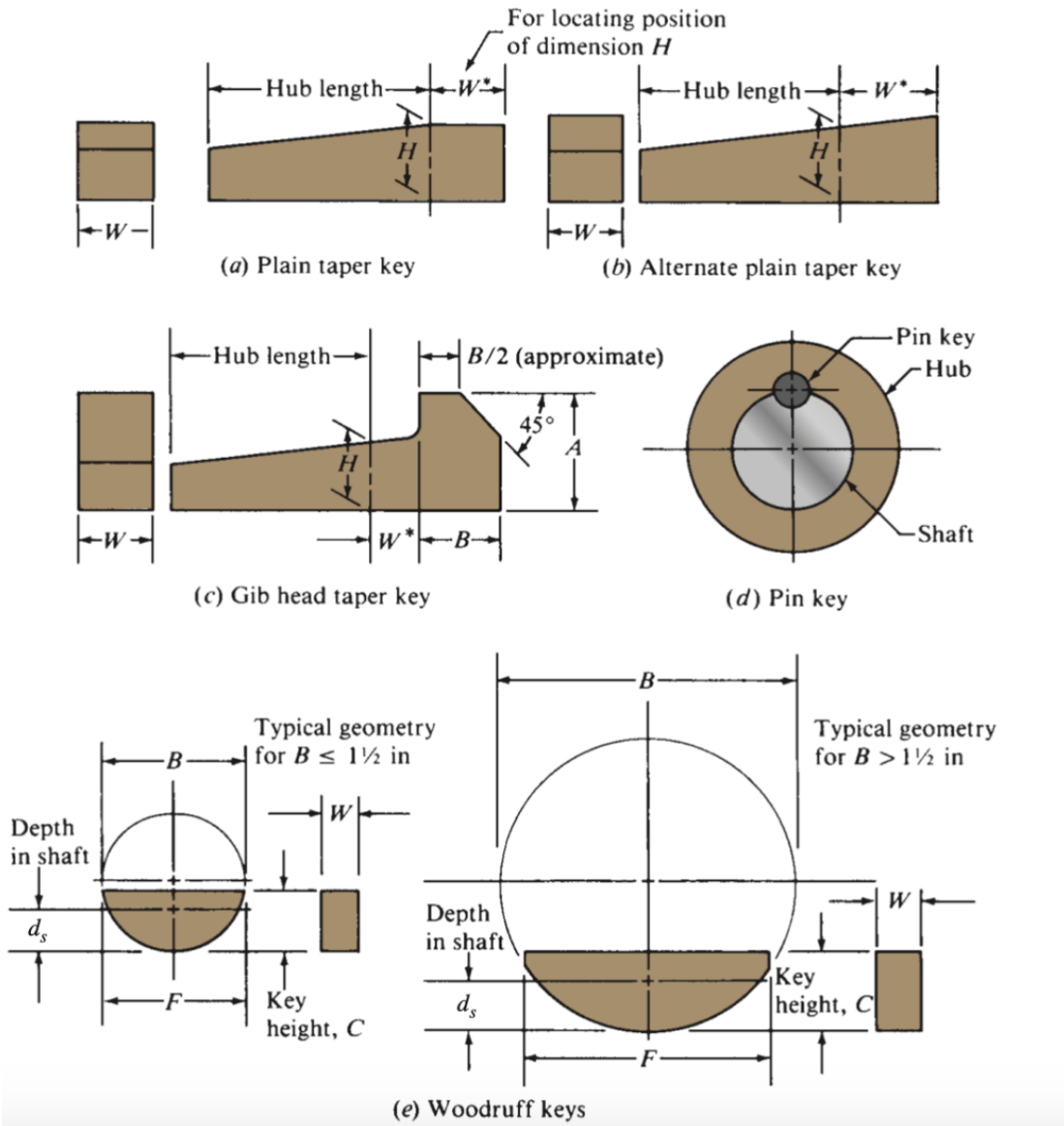

Pros and Cons:

- **Gib head key** can be extracted from the same end at which it was installed (which is desirable if the opposite end is not accessible)
- **Pin keys** experience lower stress concentration factors than parallel or taper keys
- **Woodruff keys** are easy to assemble and disassemble but can only take light loading

6.2 Screws and Fasteners

6.2.1 Screw Threads Terminology

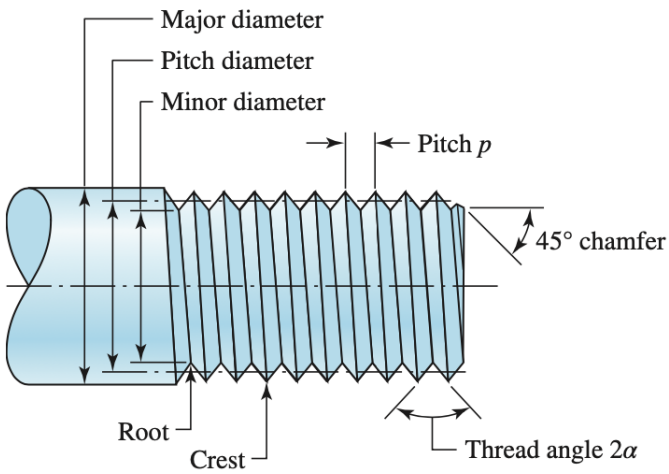

- Lead l, not shown, is the distance the nut moves parallel to the screw axis when the nut is given one turn. For a single thread, the lead is the same as the pitch

A multiple-threaded product is one having two or more threads cut beside each other.

- Double-threaded screws have a lead equal to twice the pitch
- Triple-threaded screws have a lead equal to 3 times the pitch, and so on

6.2.2 Screw Specifications

- **Metric threads** are specified by writing the nominal major diameter and pitch in millimeters, in that order
- Example: M12 $\times$ 1.75 = nominal major diameter of 12 mm and a pitch of 1.75 mm

6.2.3 Power Screw Force Analysis

- A power screw is a device used in machinery to change angular motion into linear motion, and, usually, to transmit power

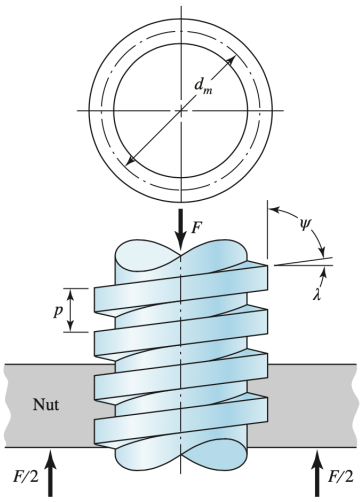

Figure 8–5

Portion of a power screw.

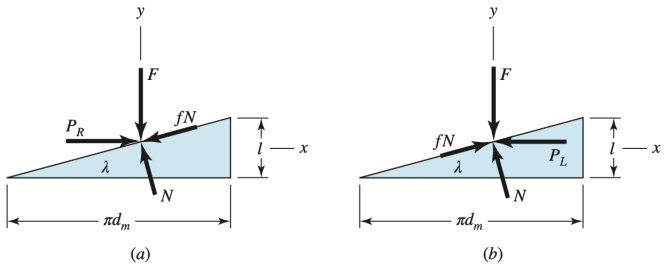

Figure 8–6

Force diagrams: (*a*) lifting the load; (*b*) lowering the load.

- P_R: force to raise the load that acts to the right
- P_L: force to lower the load that acts to the left

Thread efficiency is the ratio of raising torque without friction to with friction:

$$e = \frac{Fl}{2\pi T_R}$$

- Sketch the stress distribution present on the screw threads for an axial load F on the nut and a torque T on the screw

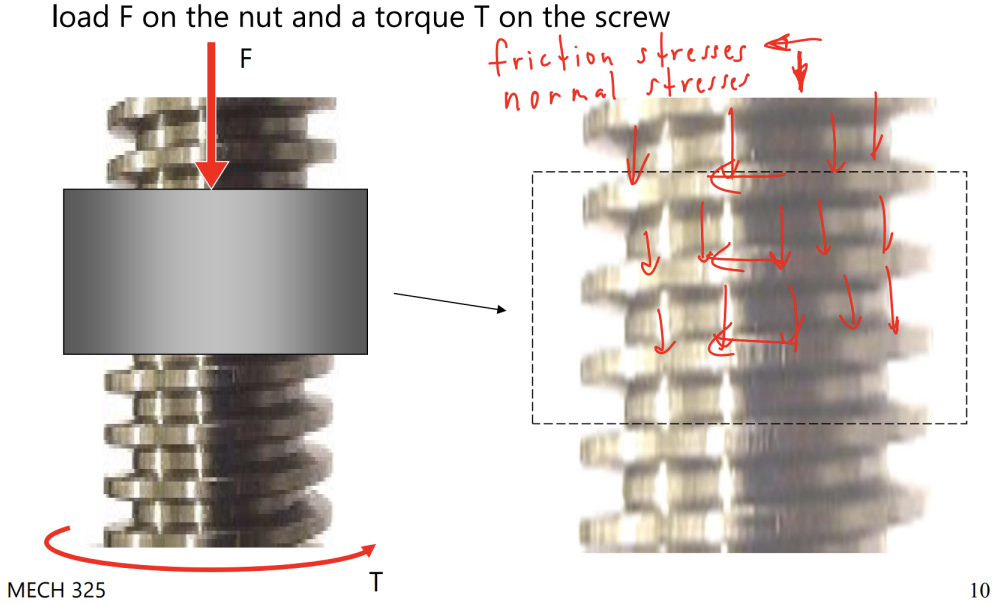

- The engaged threads don't share the load equally

- 1st engaged thread carries ~ 0.38 of the load
- 2nd carries ~ 0.25 of the load
- 3rd carries ~ 0.18 of the load
- 7th carries ~ 0 of the load

6.2.4 Types of Power Screw Threads

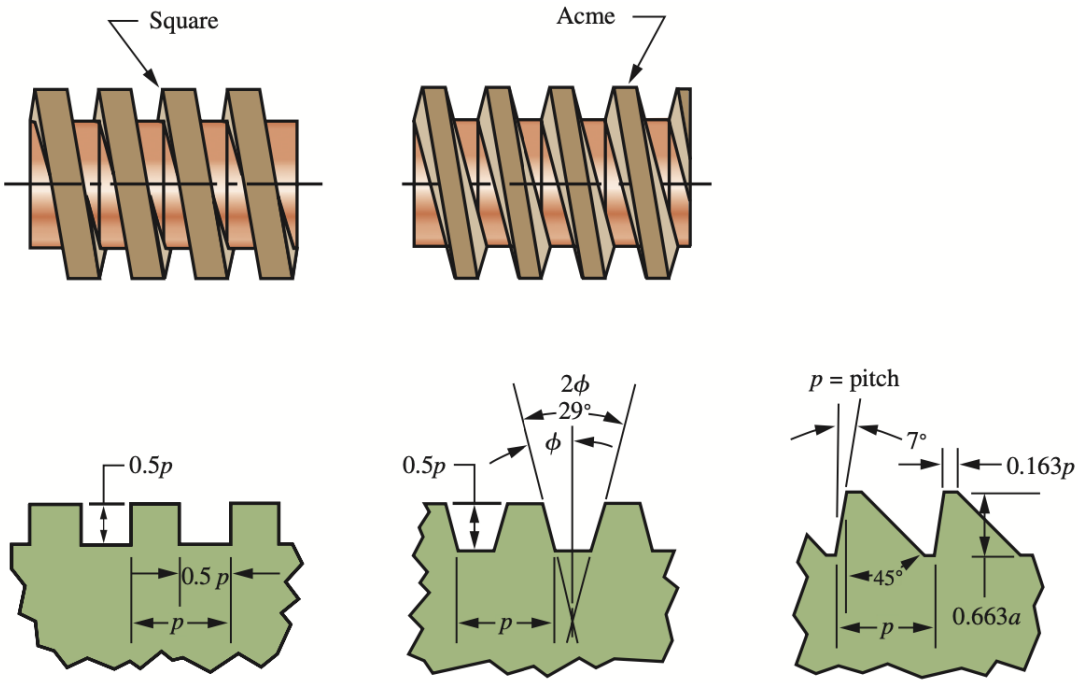

(*a*) Square thread

(*b*) Acme thread
(Ref.: ANSI B1.5-1973)

(*c*) Buttress thread
(Ref.: ANSI B1.9-1973)

6.3 Threaded Fasteners/Bolts

Types of heads used on machine screws:

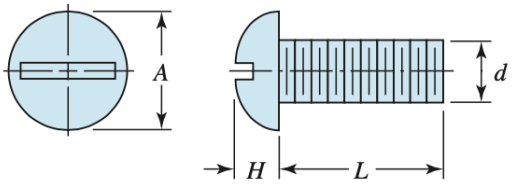

(*a*) Round head

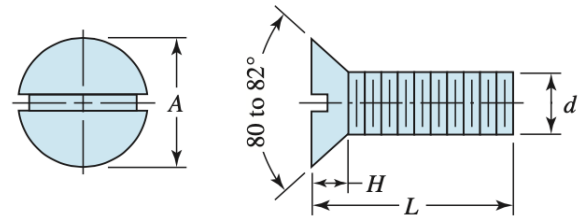

(*b*) Flat head

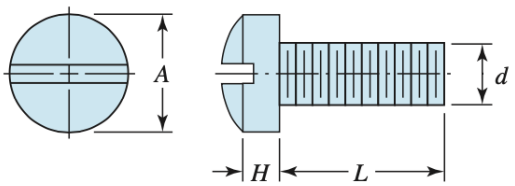

(*c*) Fillister head

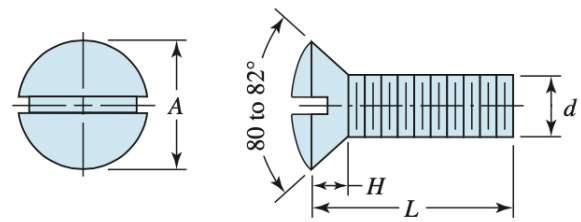

(*d*) Oval head

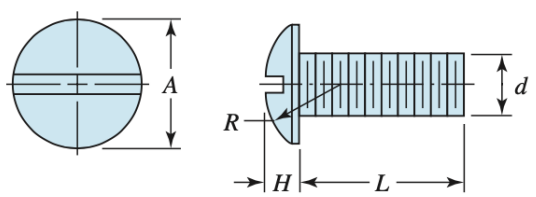

(*e*) Truss head

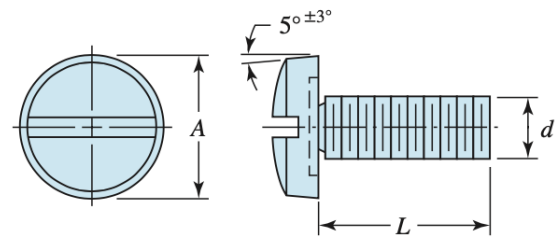

(*f*) Binding head

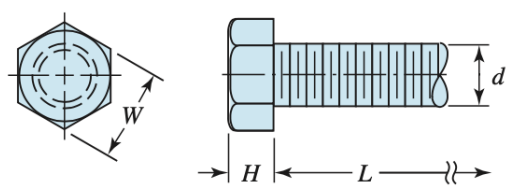

(*g*) Hex head (trimmed)

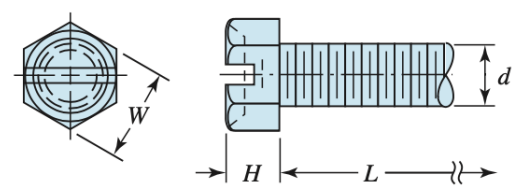

(*h*) Hex head (upset)

Example of a bolted connection:

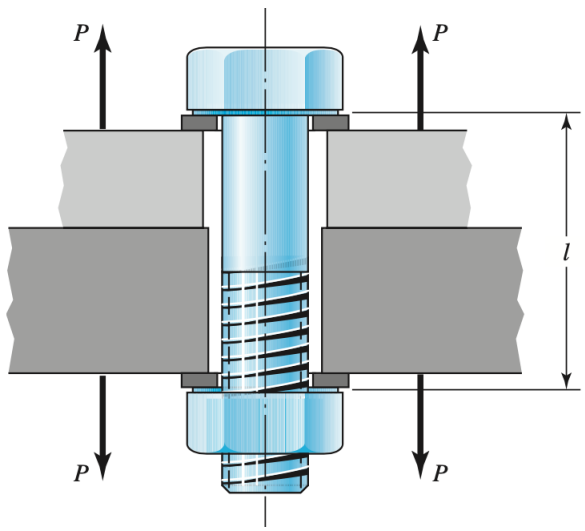

Definitions:

- **Grip l:** the total thickness of the clamped material in a bolted connection. In the example above it is the thickness of the two clamped materials + the thickness of both washers
- **Bolt spring rate k_b:** the ratio between the force applied to the bolt and the deflection produced by that force

$$k_b = \frac{A_d A_t E}{A_d l_t + A_t l_d}$$

where A_d is the major-diameter of the fastener
l_t is the length of the threaded portion
A_t is the tensile-stress area
l_d is the length of the unthreaded portion
E is Young's Modulus

The stiffness of the members in the clamped zone k_m is:

$$\frac{1}{k_m} = \frac{1}{k_1} + \frac{1}{k_2} + \frac{1}{k_3} + ... + \frac{1}{k_i}$$

We can think of all the members acting like compressed springs in series, so we add their spring rates in series.

6.3.1 Wrench Sizing

- Bolts are designated by their nominal diameter.
- The head and nut width W is "about 1.5" times nominal diameter. (Wrench size!)
- Bolt length L is measured from below the head.

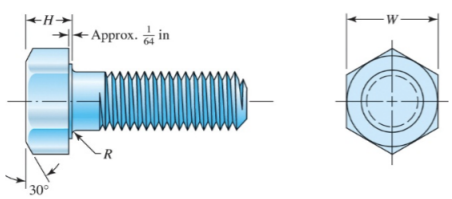

6.3.2 Nuts

- Nut grade must match the bolt grade
- Load becomes distributed over about 3 threads after yielding and cold working

6.3.3 Washers

Functions:

- **Plain or flat washer:** Distribute load between bolt head and material and nut and material (common practice to use 2 plane washers per bolt)

- **Split lock washer:** Lock fastener by providing a spring force
- **Star lock washer:** Lock fastener by digging into material therefore preventing rotation