Track : AIML
Code : PS4

HackAventus2.0

MedicAI

By: NEURAL NINJAS
- Tejas V (Lead)
- Tejas
- Yashas B N

OVERVIEW

- Introduction 01
- Workflow 02
- Business Model 03
- Challenges 04
- Learning 05
- Future Expansion 06
- Video Demo 07

INTRODUCTION

- The idea of the project is to develop a cutting-edge LLM (Large Language Model) focused on medical data analysis.

- It will utilize comprehensive patient records, including symptoms, diagnoses, and doctors' prescriptions, to assist in accurate diagnosis based on presented symptoms.

- Essentially, it aims to enhance medical decision-making by leveraging vast datasets and advanced algorithms.

WORKFLOW

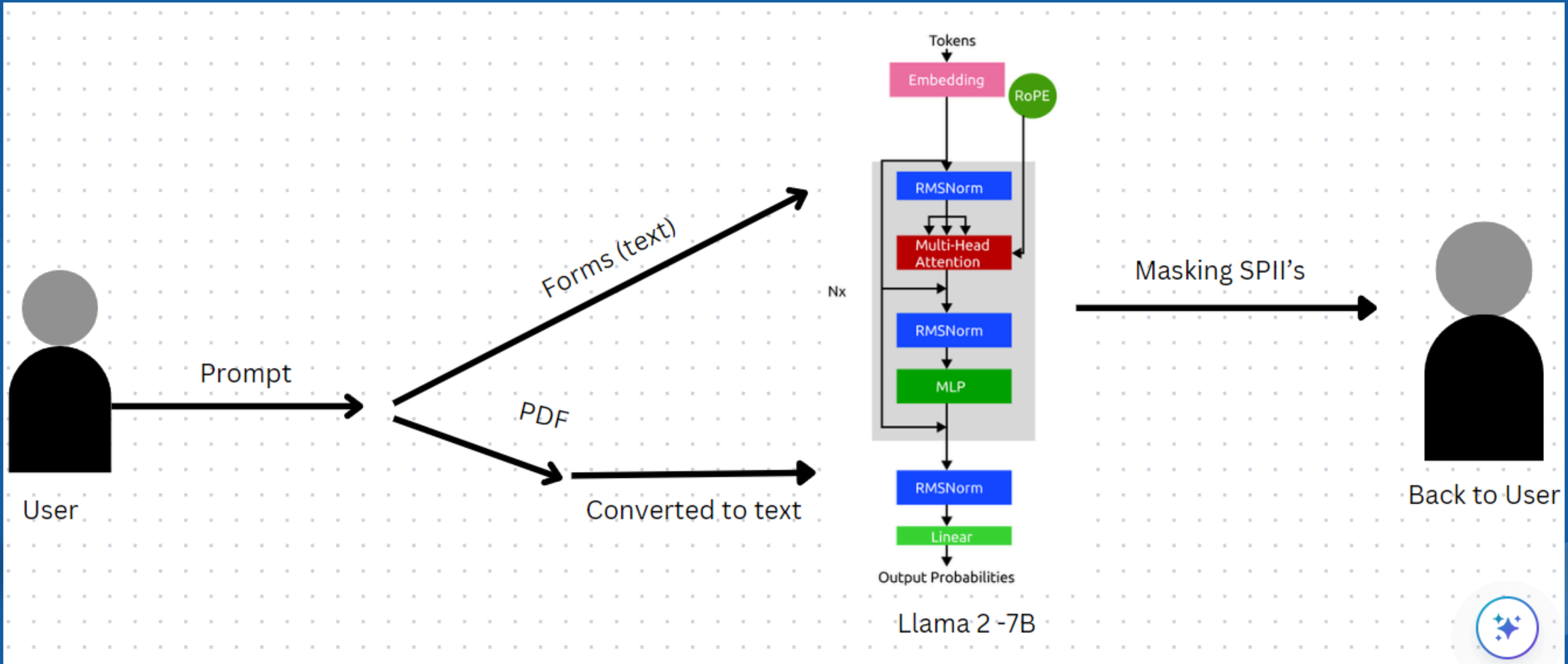
User
Prompt
Forms (text)
PDF
Converted to text
Tokens
Embedding
RoPE
RMSNorm
Multi-Head Attention
Nx
RMSNorm
MLP
RMSNorm
Linear
Output Probabilities
Llama 2 -7B
Masking SPII's
Back to User

FEATURES

01 Interdisciplinary collaboration

02 Patient Education and Engagement

03 Ethical and Privacy Considerations

04 Reducing Diagnostic Errors

BUSINESS MODEL

Silver

Access to forms for seamless diagnosis and treatment advice right at the palm of your fingers.

₹ **99** per yr

Gold

Access to upload lab tests in form of pdf for seamless diagnosis and treatment advice right at the palm of your fingers.

₹ **299** per yr

Platinum

Access to translate the result in various regional languages to break the language barriers.

₹ **499** per yr

FUTURE EXPANSION

- Personalized Treatment Plans
- Integration with Robotic Surgery and Telemedicine
- Predictive Analytics and Preventive Medicine
- Real-time Clinical Decision Support

VIDEO DEMO

https://drive.google.com/file/d/1s5vbLxT8P3Ttdjeke2Mo4OAFtvTZsFcm/view?usp=sharing

CHALLENGES

Challenge 01

It was a challenge to find good and detailed datasets to train the LLM.

Challenge 02

Faced difficulty in fine-tuning the LLM due to limited compuatational resources.

Challenge 03
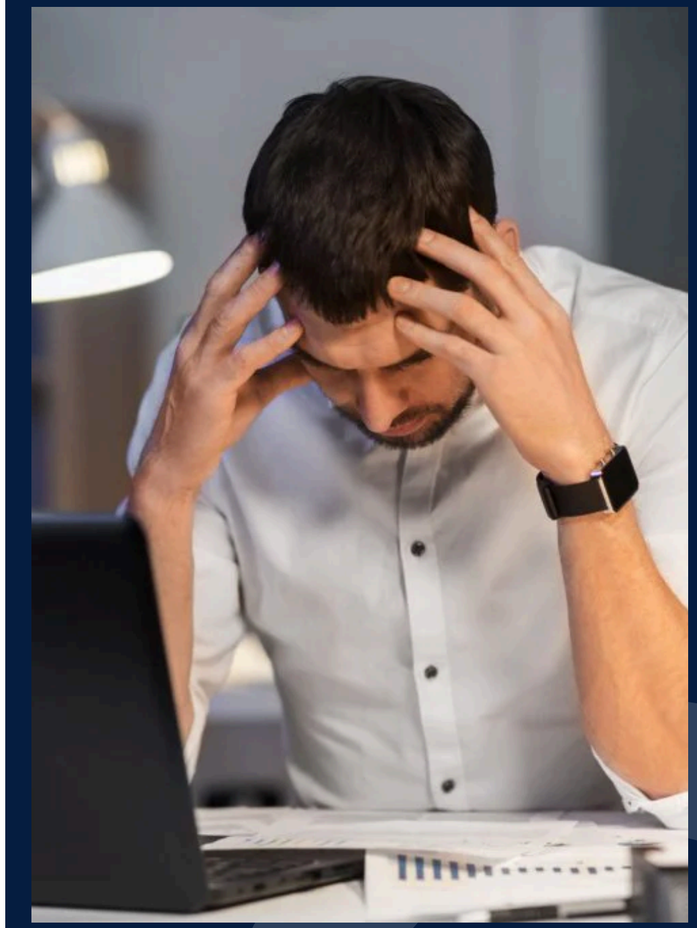
Faced difficulty in sending prompt from user (web) to colab notebook and vice versa