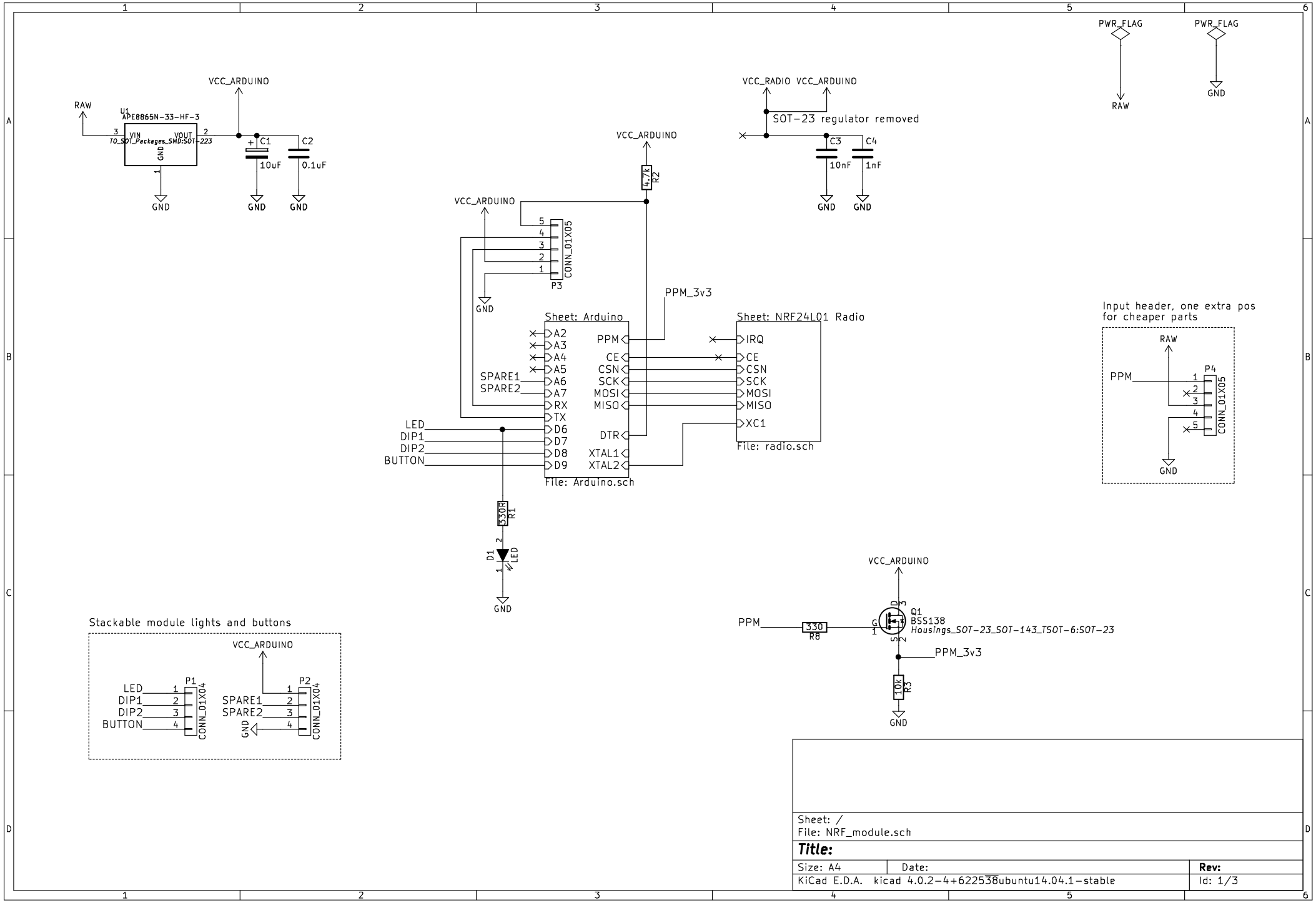
PWR_FLAG
PWR_FLAG
RAW
GND
VCC_ARDUINO
RAW
U1
APE8865N-33-HF-3
VIN
VOUT
GND
TO_SOT_Packages_SMD:SOT-223
C1
10uF
C2
0.1uF
GND
GND
GND
VCC_RADIO VCC_ARDUINO
SOT-23 regulator removed
C3
10nF
C4
1nF
GND
GND
VCC_ARDUINO
4.7k
R2
VCC_ARDUINO
CONN_01X05
P3
GND
PPM_3v3
Sheet: Arduino
A2
A3
A4
A5
SPARE1
SPARE2
A6
A7
RX
TX
LED
DIP1
DIP2
BUTTON
D6
D7
D8
D9
PPM
CE
CSN
SCK
MOSI
MISO
DTR
XTAL1
XTAL2
File: Arduino.sch
Sheet: NRF24L01 Radio
IRQ
CE
CSN
SCK
MOSI
MISO
XC1
File: radio.sch
Input header, one extra pos
for cheaper parts
RAW
PPM
P4
CONN_01X05
GND
330R
R1
D1
LED
GND
VCC_ARDUINO
PPM
330
R8
Q1
BSS138
Housings_SOT-23_SOT-143_TSOT-6:SOT-23
PPM_3v3
10k
R3
GND
Stackable module lights and buttons
VCC_ARDUINO
LED
DIP1
DIP2
BUTTON
P1
CONN_01X04
SPARE1
SPARE2
GND
P2
CONN_01X04
Sheet: /
File: NRF_module.sch
Title:
Size: A4
Date:
Rev:
KiCad E.D.A. kicad 4.0.2-4+622538ubuntu14.04.1-stable
Id: 1/3

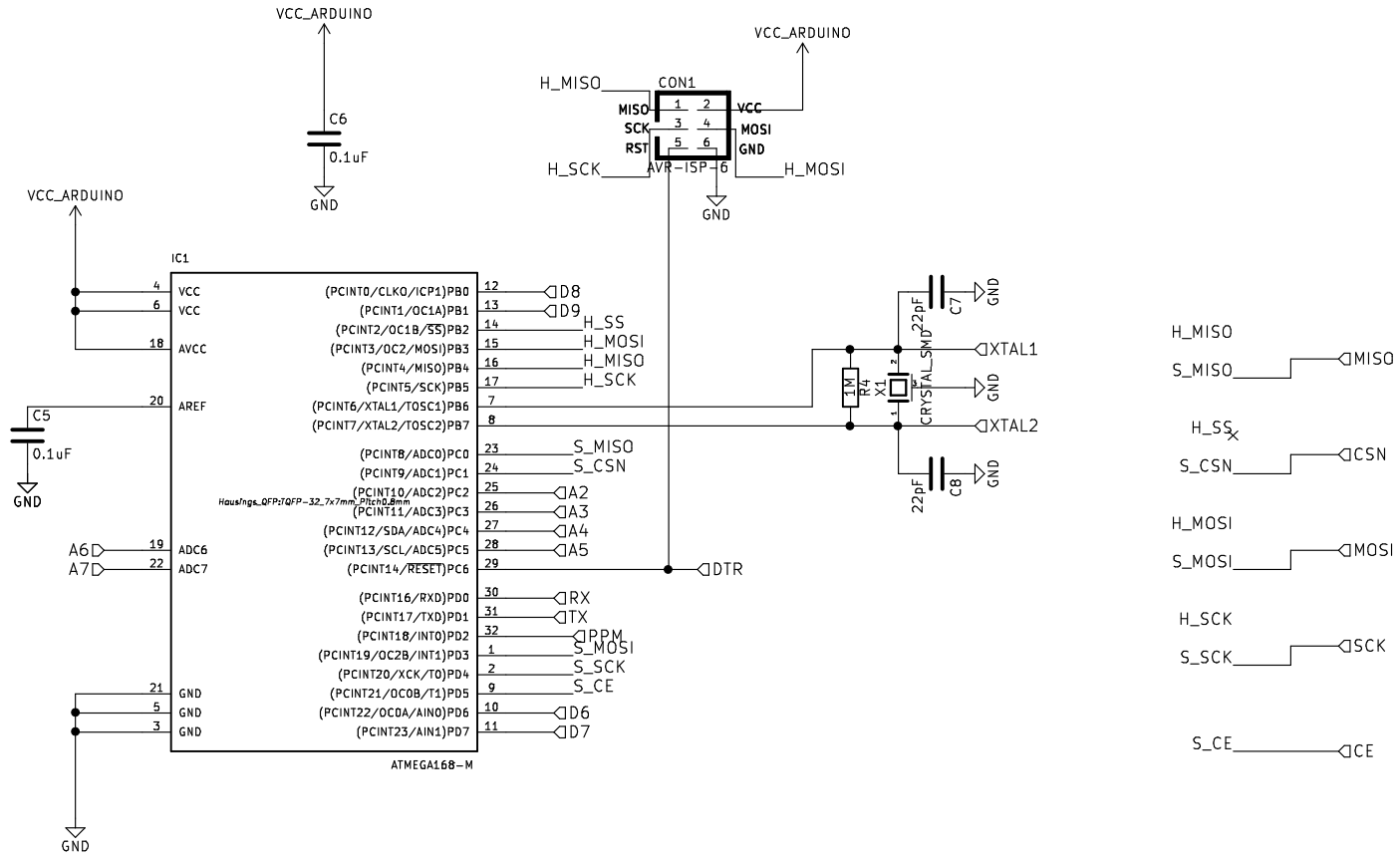

Sheet: /Arduino/
File: Arduino.sch

Title:

Size: A4	Date:	Rev:
KiCad E.D.A. kicad 4.0.2-4+622538ubuntu14.04.1-stable		Id: 2/3

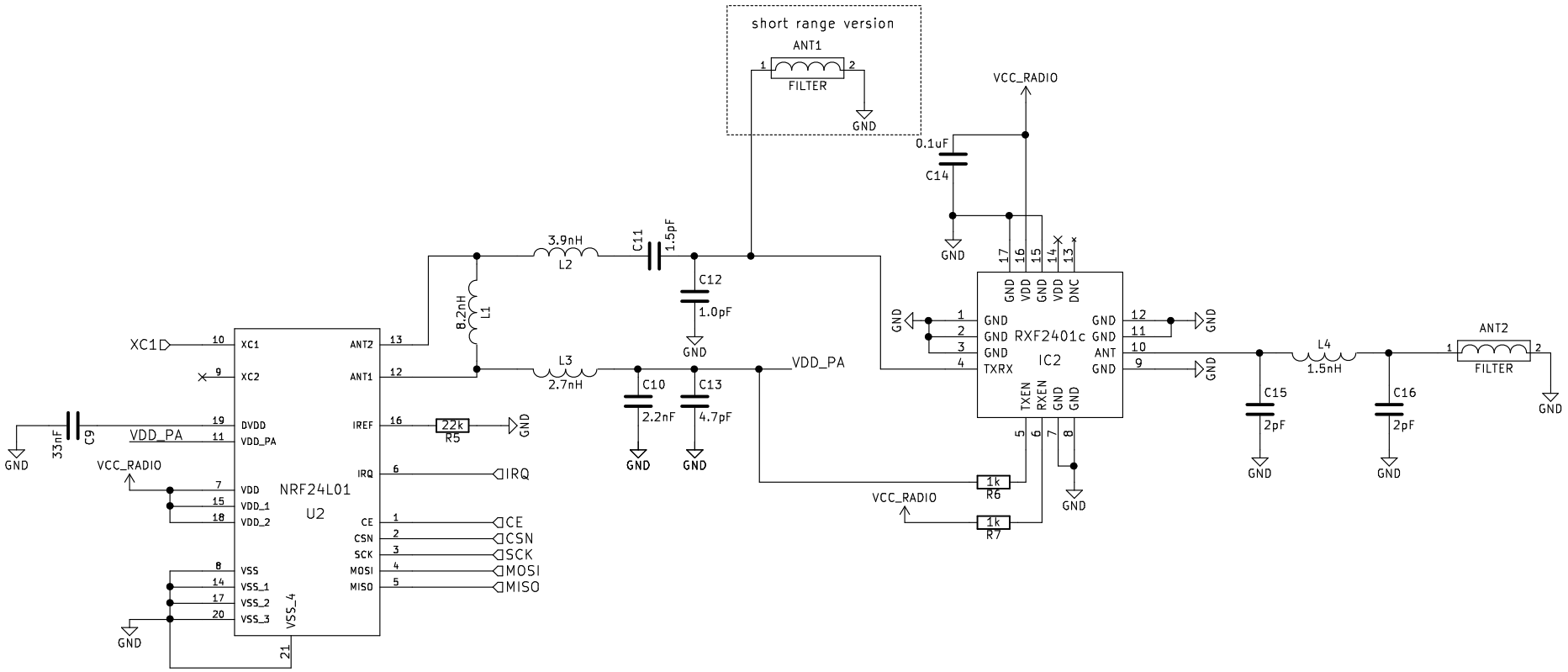

Sheet: /NRF24L01 Radio/
File: radio.sch

Title:

Size: A4	Date:	Rev:
KiCad E.D.A. kicad 4.0.2-4+622538ubuntu14.04.1-stable		Id: 3/3