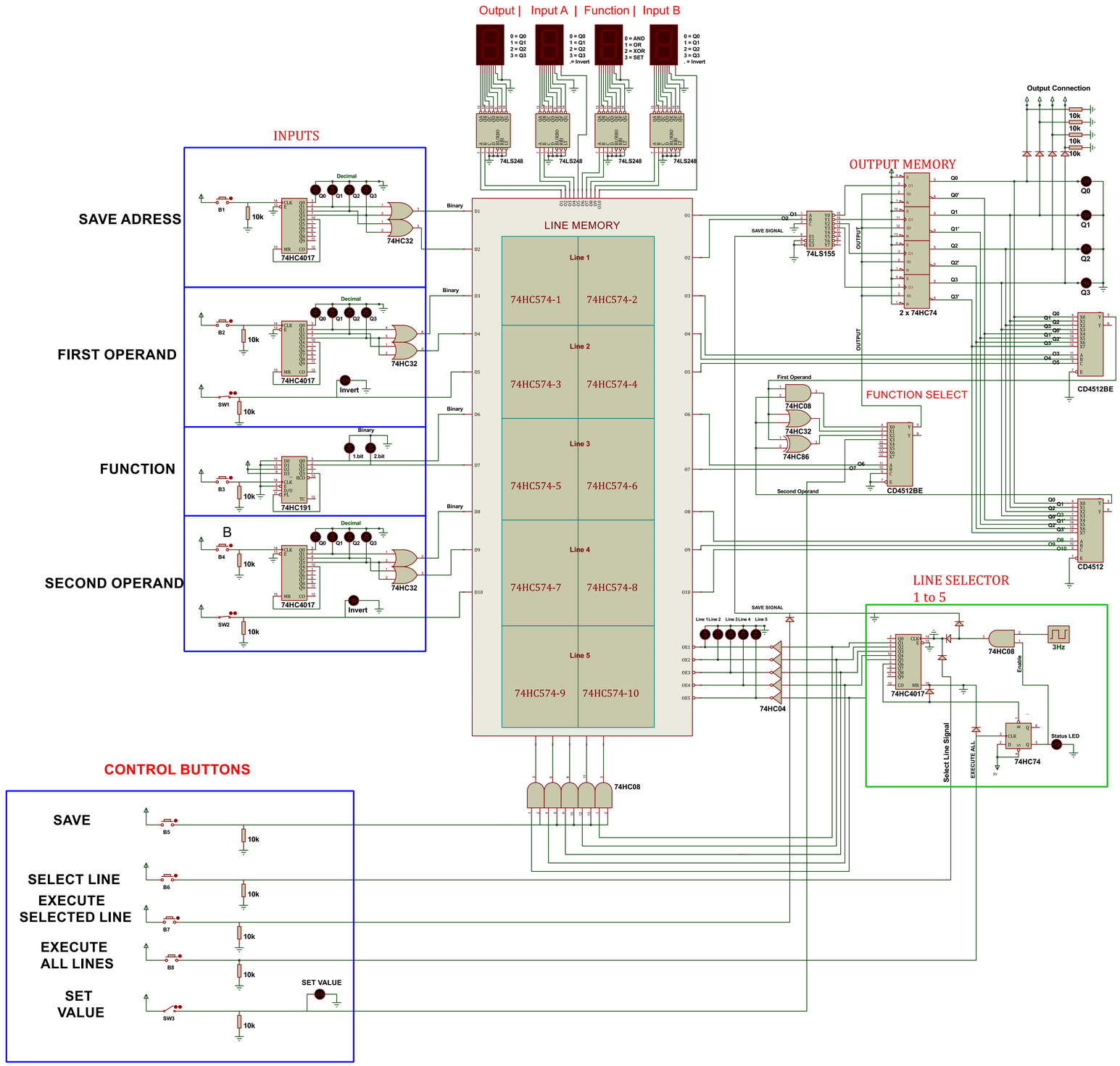

FILE NAME: presentable version-yedek.pdsprj
DESIGN TITLE: presentable version-yedek.pdsprj
PATH: C:\Users\mrcool\Desktop\presentable version-yedek.pdsprj
BY: @AUTHOR
REV: @REV
PAGE: 30.05.2024
TIME: 20:11:40