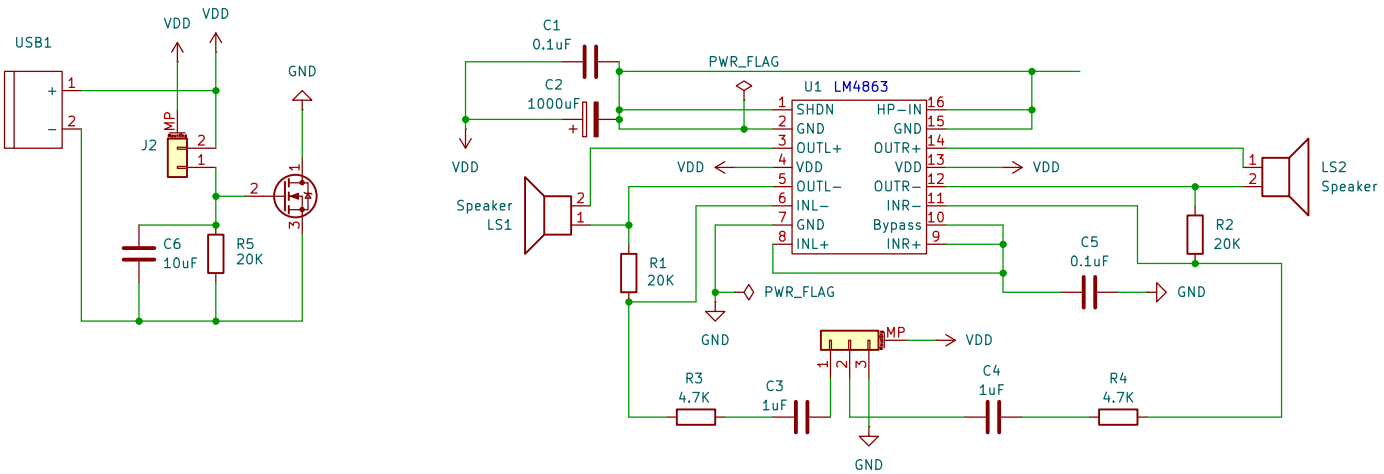

Sheet: /
File: test1.kicad_sch

Title: test1

Size: A4	Date: 2024-09-24	**Rev: v1.0**
KiCad E.D.A. 8.0.5		Id: 1/1