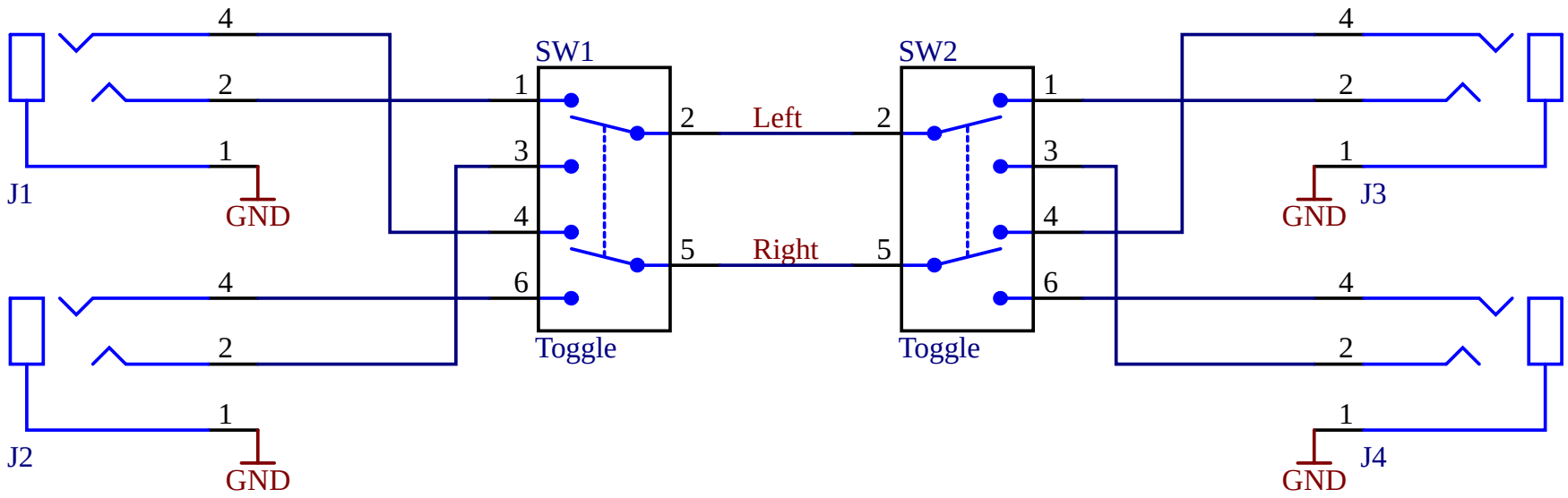

Project: Audio IO Switch	Date:	2021-01-30
Title: Main Board	Rev:	v1.0.0
	Hash:	
	Sheet:	1 of 1
Drawn By: A. Gulyas	License:	CC BY-SA