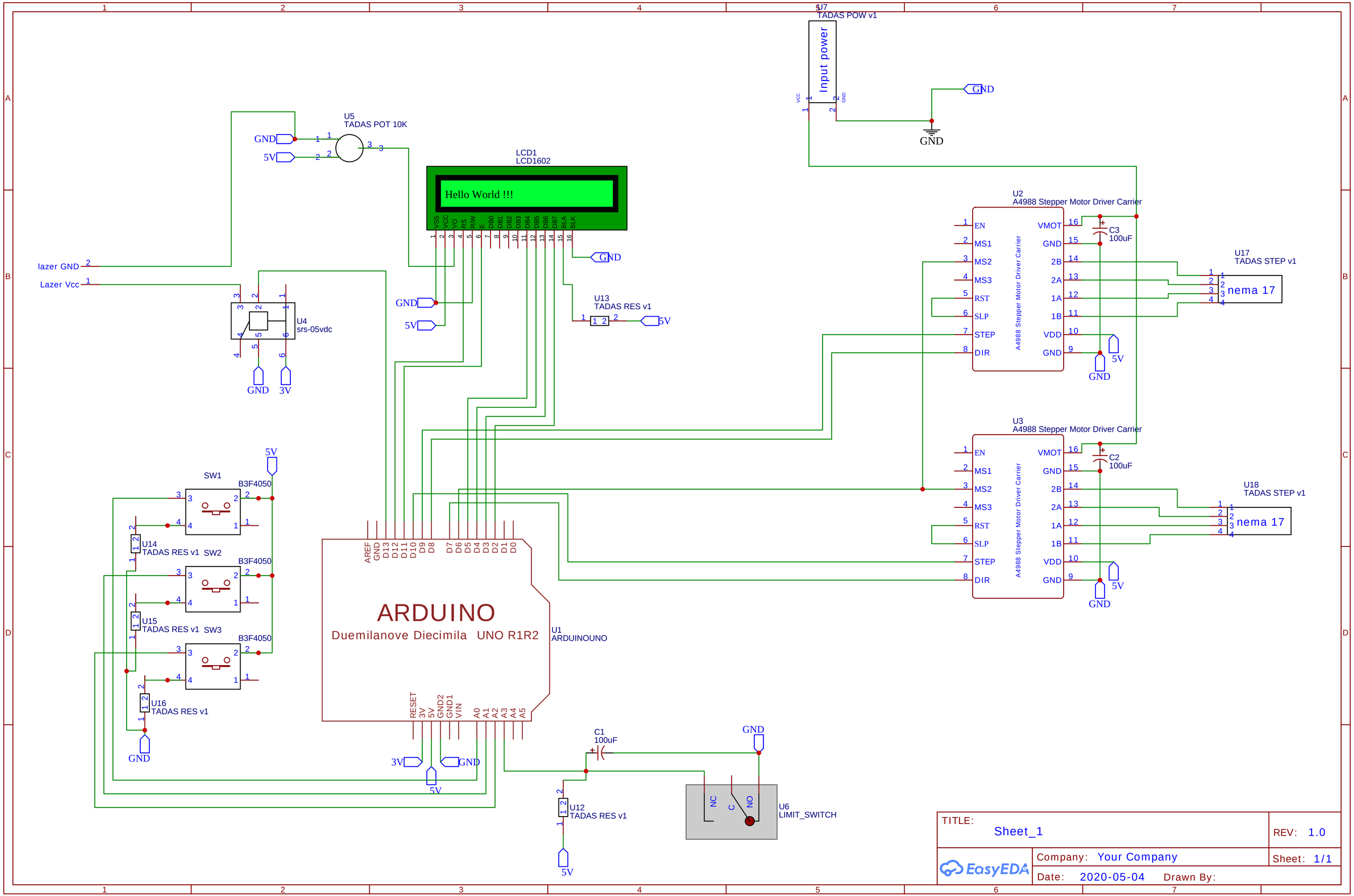
U7
TADAS POW v1
Input power
VCC
GND
GND
U5
TADAS POT 10K
GND
5V
LCD1
LCD1602
Hello World !!!
VSS VCC VO RS R/W E DB0 DB1 DB2 DB3 DB4 DB5 DB6 DB7 BLA BLK
GND
U13
TADAS RES v1
5V
lazer GND
Lazer Vcc
U4
srs-05vdc
GND
3V
GND
5V
U2
A4988 Stepper Motor Driver Carrier
EN MS1 MS2 MS3 RST SLP STEP DIR
VMOT GND 2B 2A 1A 1B VDD GND
C3
100uF
5V
GND
U17
TADAS STEP v1
nema 17
U3
A4988 Stepper Motor Driver Carrier
C2
100uF
U18
TADAS STEP v1
nema 17
SW1
B3F4050
U14
TADAS RES v1
SW2
B3F4050
U15
TADAS RES v1
SW3
B3F4050
U16
TADAS RES v1
GND
5V
ARDUINO
Duemilanove Diecimila UNO R1R2
U1
ARDUINOUNO
AREF GND D13 D12 D11 D10 D9 D8 D7 D6 D5 D4 D3 D2 D1 D0
RESET 3V 5V GND2 GND1 VIN A0 A1 A2 A3 A4 A5
3V
GND
5V
C1
100uF
GND
U12
TADAS RES v1
5V
NC C NO
U6
LIMIT_SWITCH
TITLE:
Sheet_1
REV: 1.0
Company: Your Company
Sheet: 1/1
Date: 2020-05-04
Drawn By:
EasyEDA