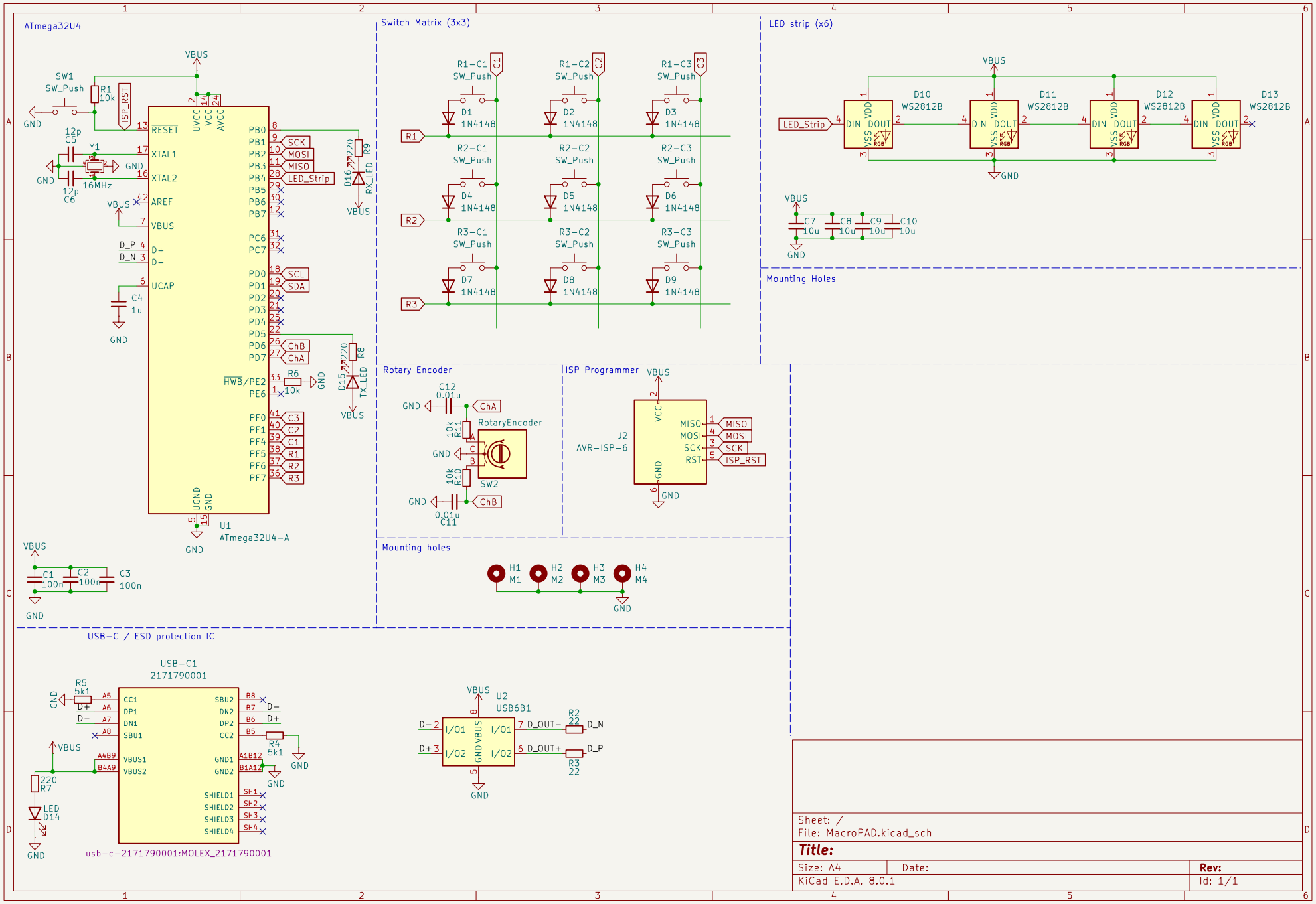
ATmega32U4
Switch Matrix (3x3)
LED strip (x6)
Mounting Holes
Rotary Encoder
ISP Programmer
Mounting holes
USB-C / ESD protection IC
U1
ATmega32U4-A
USB-C1
2171790001
usb-c-2171790001:MOLEX_2171790001
U2
USB6B1
J2
AVR-ISP-6
RotaryEncoder
SW2
LED_Strip
D10
WS2812B
D11
WS2812B
D12
WS2812B
D13
WS2812B
Sheet: /
File: MacroPAD.kicad_sch
Title:
Size: A4
Date:
Rev:
KiCad E.D.A. 8.0.1
Id: 1/1