Specifications

备注(Remark)

1.材料(MATERIAL)

胶芯：PBT+30%G.F UL94V-0，颜色:黑色.

Housing:PBT+30%G.F UL94V-0,Color:Black

四方针：黄铜，镍底30u″,表面镀金0.8U″

Contact:Brass,0.8U″ GOLD PLATING OVER ALL
30u″ NICKEL UNDERPLATING OVER ALL

2.特性 (characteristics):

额定电流：3 AMP

Raring Current:3 AMP.

接触阻抗：20 mΩ MAX.

Contact Resistance:20 mΩ MAX.

绝缘阻抗：1000 MΩ MIN.

Insulating Resistance:1000 MΩ MIN.

耐电压：AC 500V/分钟.

Withstanding Voltage:AC 500V/Minute.

温度范围：-40° C to+105° C

Temperture Range: -40° C to+105° C

Ordering Information

P125-12 03 A0 A S 116 A 5

HEIGHT OF HOUSING	NO.OF PINS PER ROW	Contact Plating: Full Of Gold	Contact Plating: Semi-gold	INSULATOR MATERIAL:	LENGTH OF TERMINAL	PACKING
15:1.5mm	2~40P	A0=0.8u"	B0=0.8U"	A:PBT		A:PE Bag
17:1.7mm		A1=1u"	B1=1U'	B:PA6T		B:Tape & Reel
20:2.0mm		A2=1.5u"	B2=1.5U'	C:PA9T		C:Tube
25:2.54mm		A3=2u"	B3=2U'	D:LCP		D:Tube+OAP
30:3.0mm		A4=3u"	B4=3U'			E:Tray
		A5=5u"	B5=5U'			
		A6=10u"	B6=10U'			
		A7=15u"	B7=15U'			
		A8=20u"	B8=20U'			
		A9=30u"	B9=30U'			
		S1=Ordinary Tin Plated				
		S2=Matte Tin Plated				
		S3=Tin-plated High-temperature				

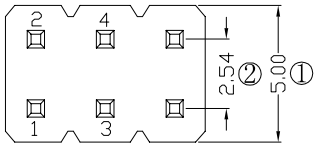

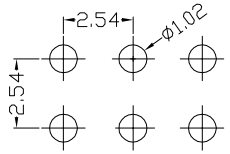

Recommended P.C.B LAYOUT

General Tolerance±0.05

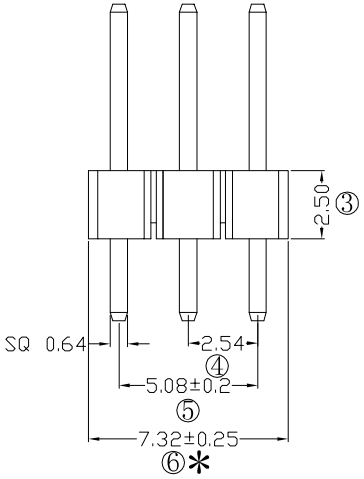

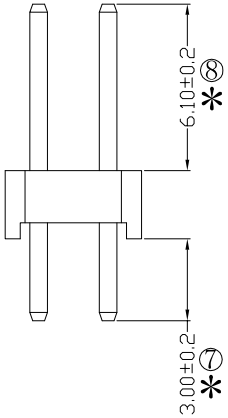

RoHS COMPLIANT

客编:

注意事项

1.带序号为必检尺寸

2.带*为重点检验尺寸

REV	DATE	SYMBOL	MODIFICATION DESCRIPTION
A0	2023.08.18	/	新版发行

OPERATION	
X.X	±0.25
X.XX	±0.20
X.XXX	±0.10
Angle	±3°
DIM	TOL

SCALE	Fit		
UNIT	MM		
SIZE	A4	DESIGN	伍思远2023.08.18
SHEET	1/1	CHECK	
PROJ.		APPROVE	

Yxcon 东莞市宇熙精密连接器有限公司
www.yxcon.com Dongguan Yuxi Electronic Co.,Ltd.

PART NO.	P125-1203A0AS116A5
TITLE:	2.54排针 2*3P L=11.6/3.0 180度 打内K PBT料 镀金0.8U 1K/袋
Customer No.	