Littelfuse®
Expertise Applied | Answers Delivered

SM712 Series 600W Asymmetrical TVS Diode Array

AUTOMOTIVE GRADE | RoHS | Pb | GREEN

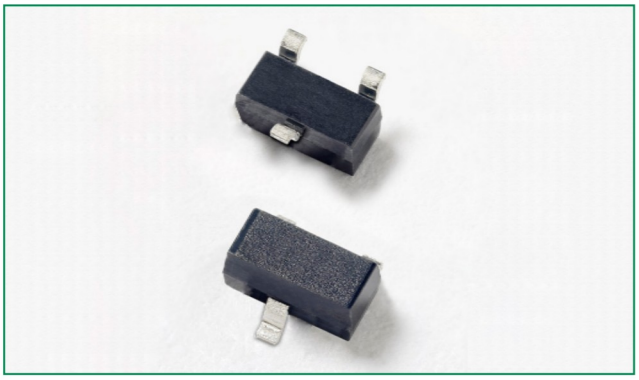

Description

The SM712 TVS Diode Array is designed to protect RS-485 applications with asymmetrical working voltages (-7V to 12V) from damage due to electrostatic discharge (ESD), electrical fast transients (EFT), and lightning induced surges.

The SM712 can absorb repetitive ESD strikes above the maximum level specified in the IEC 61000-4-2 international standard without performance degradation and safely dissipate up to 19A of 8/20us induced surge current (IEC-61000-4-5 2nd edition) with very low clamping voltages.

Pinout and Functional Block Diagram

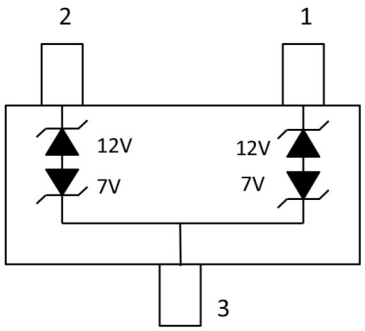

Life Support Note:
Not Intended for Use in Life Support or Life Saving Applications
The products shown herein are not designed for use in life sustaining or life saving applications unless otherwise expressly indicated.

Features

- RoHS compliant and lead-free
- ESD, IEC 61000-4-2, ±30kV contact, ±30kV air
- EFT, IEC 61000-4-4, 50A (5/50ns)
- Lightning, IEC 61000-4-5 2nd edition, 19A (t_p=8/20µs)
- Working Voltages: -7V to 12V
- Low clamping voltage
- Low leakage current
- AEC-Q101 Qualified
- Moisture Sensitivity Level (MSL-1)

Applications

- RS-485
- Fieldbus
- Modbus
- Profibus
- DMX512
- Security Systems
- AutomatedT eller Machines (ATMs)
- Lighting Control - DALI
- Communication Equipments

RS-485 Application Example

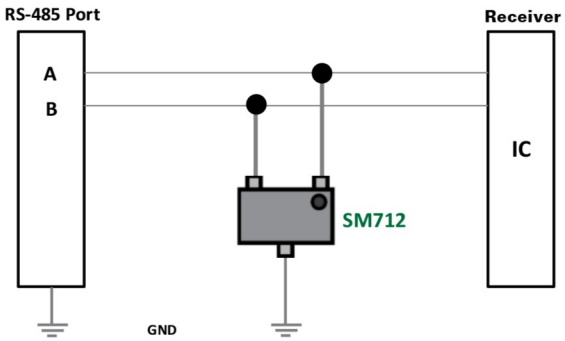

Additional Information

Datasheet | Resources | Samples

© 2017 Littelfuse, Inc.
Specifications are subject to change without notice.
Revised: 10/09/17

Absolute Maximum Ratings

Symbol	Parameter	Value	Units
P_{Pk}	Peak Pulse Power (t_p=8/20µs)	600	W
I_{PP}	Peak Pulse Current (t_p=8/20µs)	19	A
T_{OP}	Operating Temperature	-40 to 125	°C
T_{STOR}	Storage Temperature	-55 to 150	°C

Notes:
CAUTION: Stresses above those listed in "Absolute Maximum Ratings" may cause permanent damage to the component. This is a stress only rating and operation of the component at these or any other conditions above those indicated in the operational sections of this specification is not implied.

SM712 Electrical Characteristics (T_{OP}=25°C)

Parameter	Symbol	Test Conditions	Min	Typ	Max	Units
Reverse Standoff Voltage	V_{RWM}	I_R≤1µA, Pin 3 to Pin 1 or Pin 2			7.0	V
		I_R≤1µA, Pin 1 or Pin 2 to Pin 3			12.0	V
Reverse Breakdown Voltage	V_R	I_R=1mA, Pin 3 to Pin 1 or Pin 2	7.5			V
		I_R=1mA, Pin 1 or Pin 2 to Pin 3	13.3			V
Leakage Current	I_{LEAK}	V_R=7V			20	µA
		V_R=12V			1	µA
Clamp Voltage[1]	V_C	I_{PP}=1A, t_p=8/20µs, Pin 1 or Pin 2 to Pin 3			19	V
		I_{PP}=1A, t_p=8/20µs, Pin 3 to Pin 1 or Pin 2			11	V
		I_{PP}=19A, t_p=8/20µs, Pin 1 or Pin 2 to Pin 3			31	V
		I_{PP}=19A, t_p=8/20µs, Pin 3 to Pin 1 or Pin 2			19	V
Dynamic Resistance[1]	R_{DYN}	$(V_{C2} - V_{C1}) / (I_{PP2} - I_{PP1})$		0.5		Ω
ESD Withstand Voltage[1]	V_{ESD}	IEC 61000-4-2 (Contact Discharge)	±30			kV
		IEC 61000-4-2 (Air Discharge)	±30			kV
Diode Capacitance[1]	$C_{I/O-GND}$	Reverse Bias=0V, f=1MHz; Pin 1 or Pin 2 to Pin 3			75	pF

Notes : 1. Parameter is guaranteed by design and/or device characterization.

Capacitance vs. Reverse Bias

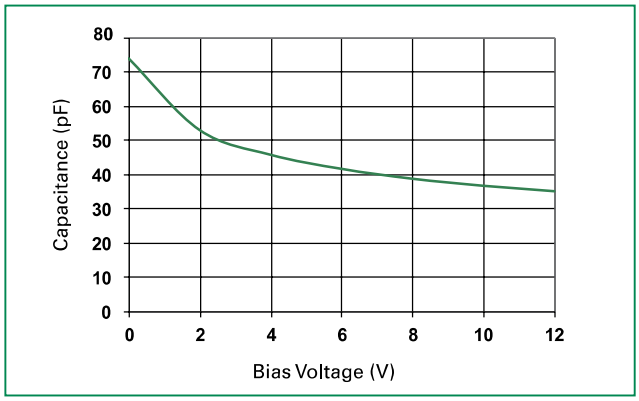

Clamping Voltage vs. I_{PP}

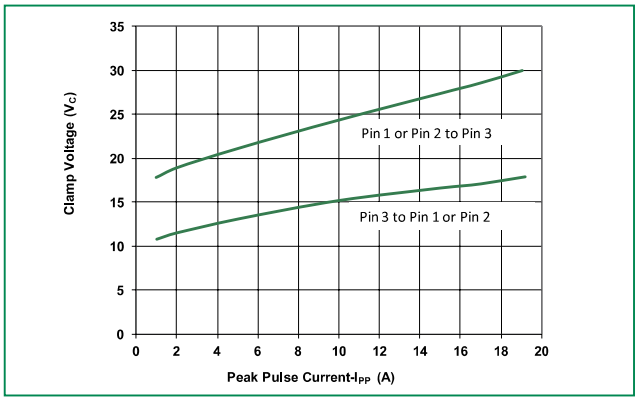

© 2017 Littelfuse, Inc.
Specifications are subject to change without notice.
Revised: 10/09/17

Non-Repetitive Peak Pulse Power vs. Pulse Time

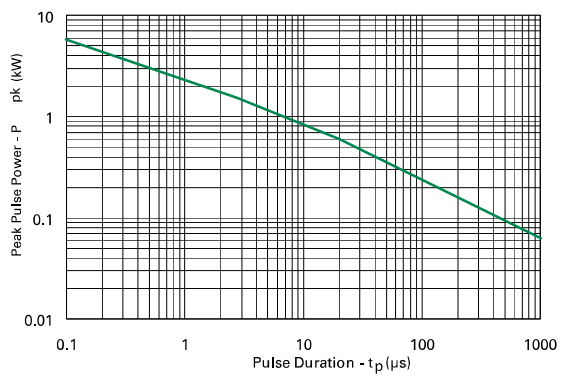

Power Derating Curve

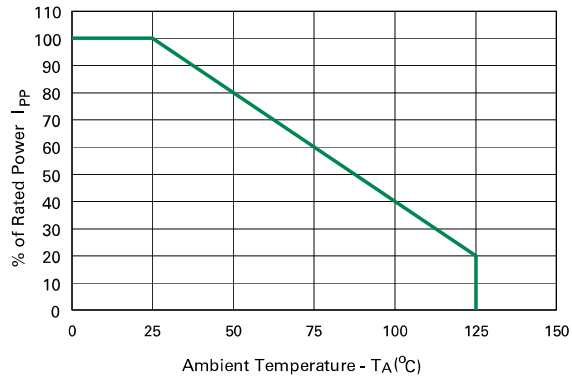

Pulse Waveform

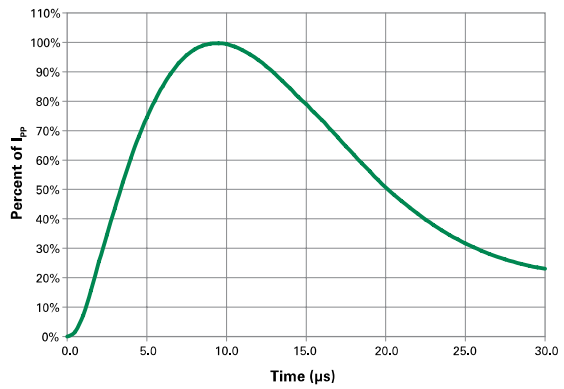

Soldering Parameters

Reflow Condition		Pb – Free assembly
Pre Heat	-Temperature Min ($T_{s(min)}$)	150°C
	-Temperature Max ($T_{s(max)}$)	200°C
	-Time (min to max) (t_s)	60 – 180 secs
Average ramp up rate (Liquidus) Temp (T_L) to peak		3°C/second max
$T_{S(max)}$ to T_L - Ramp-up Rate		3°C/second max
Reflow	-Temperature (T_L) (Liquidus)	217°C
	-Temperature (t_L)	60 – 150 seconds
Peak Temperature (T_P)		$260^{+0/-5}$ °C
Time within 5°C of actual peak Temperature (t_p)		20 – 40 seconds
Ramp-down Rate		6°C/second max
Time 25°C to peak Temperature (T_P)		8 minutes Max.
Do not exceed		260°C

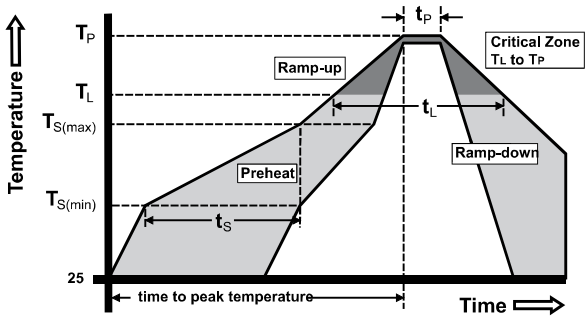

© 2017 Littelfuse, Inc.
Specifications are subject to change without notice.
Revised: 10/09/17

Part Marking System

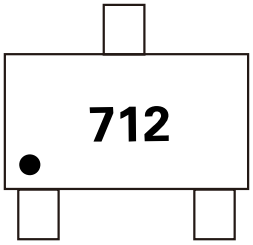

Part Numbering System

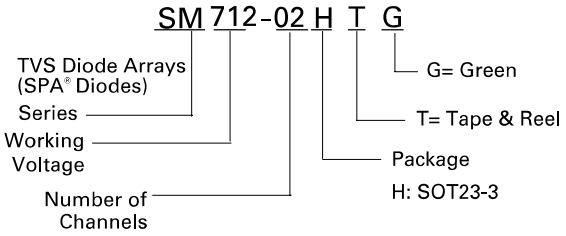

Ordering Information

Part Number	Package	Marking	Min. Order Qty.
SM712-02HTG	SOT23-3	712	3000

Package Dimensions — SOT23-3

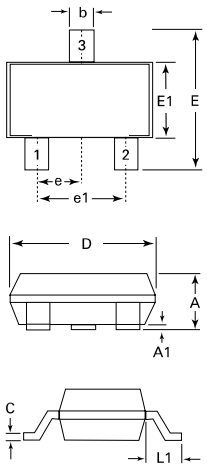

Recommended Pad Layout

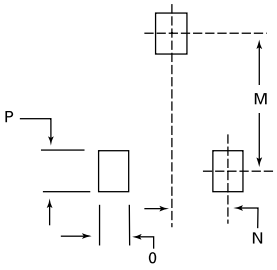

Package	SOT23-3			
Pins	3			
JEDEC	TO-236			
	Millimeters		Inches	
	Min	Max	Min	Max
A	0.89	1.12	0.035	0.044
A1	0.01	0.1	0.0004	0.004
b	0.3	0.5	0.012	0.020
c	0.08	0.2	0.003	0.008
D	2.8	3.04	0.110	0.120
E	2.1	2.64	0.083	0.104
E1	1.2	1.4	0.047	0.055
e	0.95 BSC		0.038 BSC	
e1	1.90 BSC		0.075 BSC	
L1	0.54 REF		0.021 REF	
M	–	2.29	–	.090
N	–	0.95	–	0.038
O	–	0.78	–	.030TYP
P	–	0.78	–	.030TYP

© 2017 Littelfuse, Inc.
Specifications are subject to change without notice.
Revised: 10/09/17

Embossed Carrier Tape & Reel Specification — SOT23-3

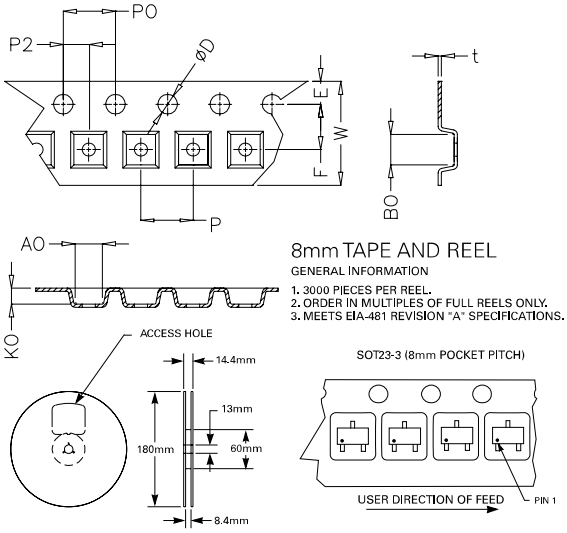

Symbol	Millimetres		Inches	
	Min	Max	Min	Max
E	1.65	1.85	0.065	0.073
F	3.40	3.60	0.134	0.142
P2	1.90	2.10	0.075	0.083
D	1.40	1.60	0.055	0.063
P0	3.90	4.10	0.154	0.161
W	7.70	8.30	0.303	0.327
P	3.90	4.10	0.154	0.161
A0	3.05	3.25	0.120	0.128
B0	2.67	2.87	0.105	0.113
K0	1.12	1.32	0.044	0.052
t	0.22	0.24	0.009	0.009

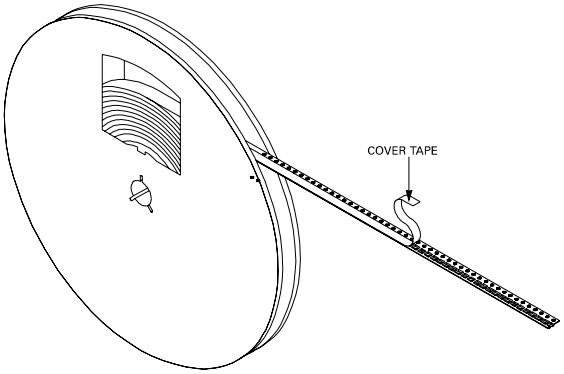

Disclaimer Notice - Information furnished is believed to be accurate and reliable. However, users should independently evaluate the suitability of and test each product selected for their own applications. Littelfuse products are not designed for, and may not be used in, all applications.
Read complete Disclaimer Notice at www.littelfuse.com/disclaimer-electronics.

© 2017 Littelfuse, Inc.
Specifications are subject to change without notice.
Revised: 10/09/17