ROHS Compliant

MAPX	MODIFICATION	DATE	DRAW	APPROVE

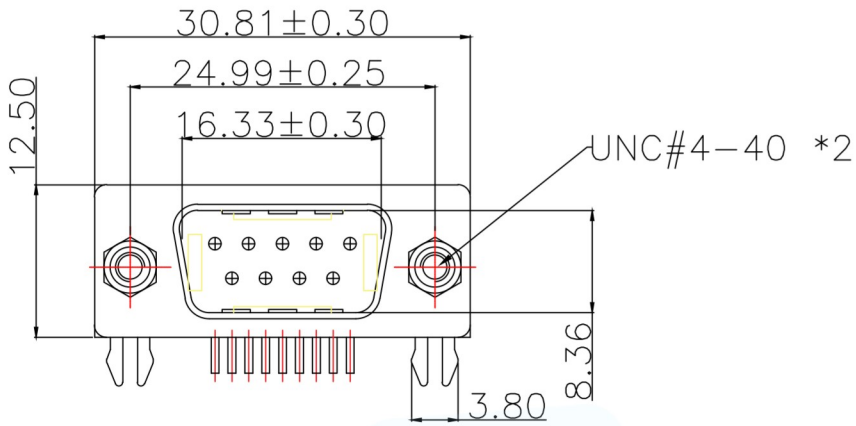

一、MATERIAL:

1.Insulator:PBT+30%Glass Fiber
2.Contact:Brass
3.Contact Plated:Gold Flash over Tin Or Glod Plated Or Tin Plated
4.Shell:Steel,Nickel Plated

二、SPECIFICATION:

1.Current Rating:3 AMPS
2.Insulation Resistance: 100MΩ MIN. At 500VDC
3.Dielectric Strength: 500V for One minute
4.Operation Temperature: -55° C~+105° C.

❊【胶芯颜色、防火要求、环保要求及电镀规格 依据客户实际订单要求为准】

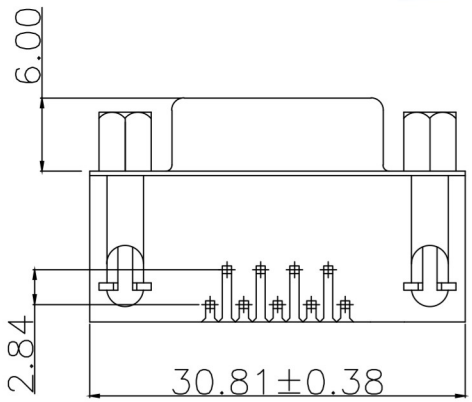

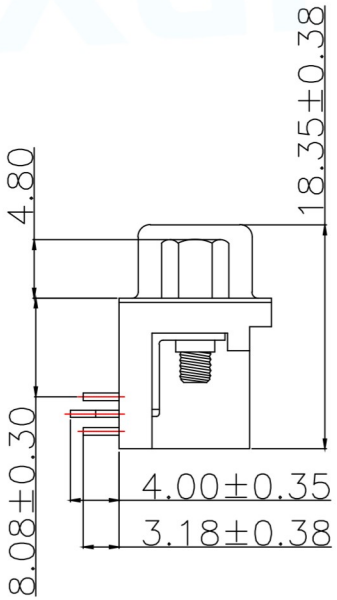

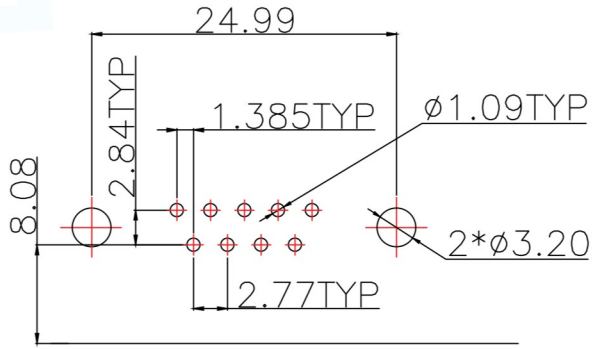

RECOMMEND PCB LAYOUT (T=1.6)
PCB TOLERANCE:±0.05

MANUFACTURE DWG		东莞市讯普电子科技有限公司 DongGuan XunPu Electronics Co,Ltd			
UNLESS OTHERWISE SPECIFED TOLERANCES			TITLE: DR9M叉锁		
			PAR	D-SUB-DR-9PCG-BB	
DECIMALS:	ANGLES:		DWN		
			CHKD		
X.X±0.30	X.°±5°		APVD		
X.XX±0.25	X.X°±2°		SCALE N:A	UNIT:MM	
X.XXX±0.15	X.XX°±1°	CUSTOMER COPY	SIZE:A4	SHEET:1F1	REV:A