Laboratory 4:

Circuit Design for Basic Standard Cells

OBJECTIVES

- The objective of this lab is for students to perform the complete digital design flow from circuit design → pre-layout simulation using **Cadence Virtuoso**.
- Using **Cadence Virtuoso**, students create the schematic using the **Virtuoso Schematic Editor** and draw a symbol for the students' design using the **Virtuoso Symbol Editor**.
- After the previous process, students run pre-layout simulation: DC analysis and transient simulation using **ADE-Explorer** and measure timing parameters (rise/fall time, rising/falling, propagation delay) and power consumption using the **Calculator or Point Markers**.

PREPARATION FOR LAB 4

- Understand the concept and flow of the circuit design for basic standard cells.
- Read the server access guide and the user guides for the Cadence Virtuoso.
- Understand how to Cadence Virtuoso to design circuit, run pre-layout simulation and measure pre-layout parameters.

REFERENCE

Note: In this 251 semester, notice that the PDK will be used is GPDK045 by TSMC Foundry. The document for layout is designed for the FreePDK45; the layout instruction for the PDK45 will be released later. Thank you!

Laboratory 4:

Circuit Design for Basic Standard Cells

EXPERIMENT 1

Objective: Perform circuit design for a CMOS NOT logic gate.

Description: In this experiment, we perform circuit design for a CMOS NOT logic gate. The symbol and the schematic of this logic gate (inverter) are shown in Figures 1a and 1b, respectively. Students create the schematic and symbol for the inverter, then run DC analysis and transient simulations.

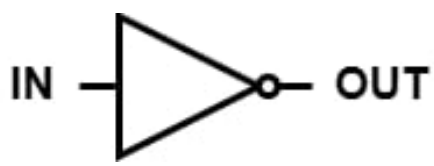

Figure 1a: The symbol of an inverter

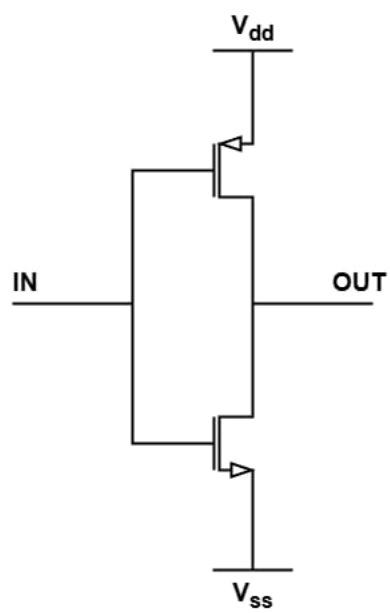

Figure 1b: The schematic of a CMOS inverter

Instruction:

a. DC Analysis simulation:

Use **ADE-L** to simulate the DC response of an inverter (INV) gate. Apply an input signal as a ramp voltage ranging from 0V to 1V or perform a voltage sweep from 0V to 1V. Observe the corresponding output response. The circuit parameters are configured as follows:

Parameters	Value
V_{dd}	$1V$
C_{load}	$1fF$
V_{in}	$[0, 1]V$

Table 1: Parameters in DC analysis

b. Transient simulation:

Use ADE-L to perform a time-domain simulation to verify the operation according to the truth table of the INV gate, represented in the form of an output waveform. To conduct this simulation, assemble a testbench circuit consisting of a pulse source (vpulse), an output capacitor, and provide power to the circuit (vdc). The circuit parameters are configured as follows:

Parameters	Value	Note
V_{dd}	$1V$	
C_{load}	$1fF$	
Voltage 1	$0V$	Parameters for vpulse
Voltage 2	$1V$	
Rise time	$1ps$	
Fall time	$1ps$	
Delay	$0ns$	
Pulse width	$1ns$	
Period	$2ns$	

Table 2: Parameters for transient simulation.

Testbench circuit for INV:

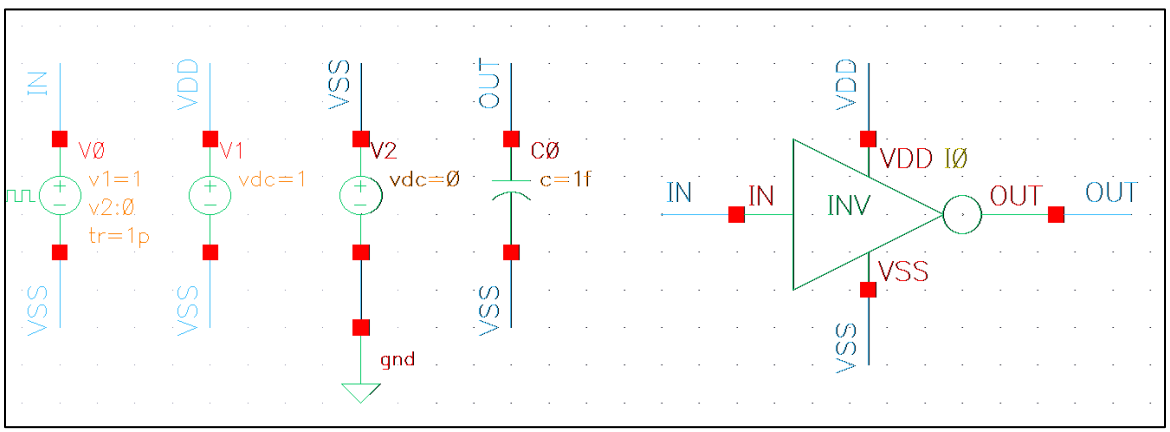

Figure 1: The testbench of a CMOS inverter.

Requirements:

- Provide the truth table of the NOT gate and describe the operation of the CMOS circuit (Describe the operating regions and explain how the NMOS and PMOS turn on and off according to theory).

The sizing for each NMOS and PMOS (width/length/finger=120n/45n/2).

- Run DC analysis with parameters in Table 1. During the simulation process, students record the following two results: output voltage values at various values of V_{in} with a 0.1V step, plot the curve of V_{out}. Besides, *students can decrease the number of steps* V_{in} *to draw the curve of* V_{out} *for more precise*.

V_{in} (V)	0.1	0.2	0.3	0.4	0.5	0.6	0.7	0.8	0.9	1.0
V_{out} (V)										

Table 3: The output voltage values at various values of V_{in} With a 0.1V step.

From the curve, find V_{IL}, V_{IH}, V_{OL} and V_{OH} and midpoint (V_M) of the circuit.

- Run transient simulation with parameters in Table 2. During the simulation process, students record input and output waveforms. Then, students measure some timing measurements and power in Table 4.

Parameters	Result
t_{rise} – Rising time $(10\% - 90\%)$	
t_{fall} – Falling time $(90\% - 10\%)$	
t_{pdr} – Rising propagation delay $(90\% - 50\%)$	
t_{pdf} – Falling propagation delay $(10\% - 50\%)$	
t_{pd} – Average propagation delay (50% - 50%)	
Dynamic power	
Static power	

Table 4: Measurement requirements for an inverter.

- Adjust the sizing of the PMOS and NMOS so that the V_M=V_{DD}/2.

Laboratory 4:

Circuit Design for Basic Standard Cells

EXPERIMENT 2

Objective: Perform circuit design for CMOS NOR and NAND logic gates.

Description: In this experiment, we perform circuit design for CMOS NOR and NAND logic gates. The symbol and the schematic of these logic gates are shown in Figures 2 and 3. Students create the schematic and symbol for these gates, then run DC analysis and transient simulations.

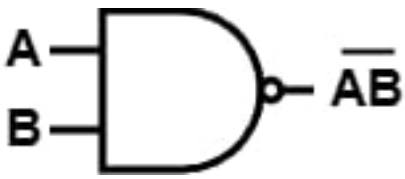

Figure 2a: The symbol of a NAND gate

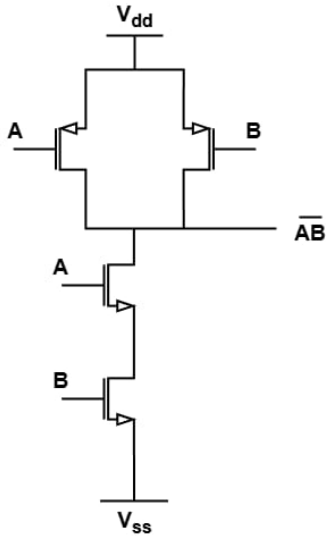

Figure 2b: The schematic of a CMOS NAND gate

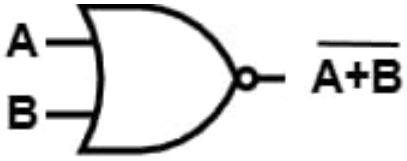

Figure 3a: The symbol of a NOR gate

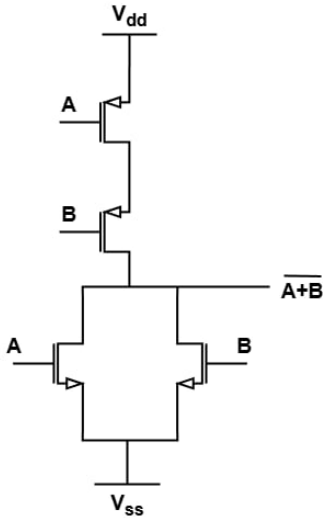

Figure 3b: The schematic of a CMOS NOR gate

Laboratory 4:

Circuit Design for Basic Standard Cells

Requirements:

- Provide the truth table of each gate and describe the operation of the CMOS circuit (Describe the operating regions and explain how the NMOS and PMOS turn on and off according to theory).

The sizing for each NMOS and PMOS (width/length/finger=120n/45n/2).

- For each gate, to investigate **V_{out} with respect to each input**, what value (logic level and voltage) should be applied to the remaining input, and why?
- For each gate, run DC analysis for each input using the parameters in Table 1. During the simulation process, students record the following two results: output voltage values at various values of V_{in} with a 0.1V step, plot the curve of V_{out}. Besides, *students can decrease the number of steps V_{in} to draw the curve of V_{out} for more precise*.
  From the curve, find V_{IL}, V_{IH}, V_{OL} and V_{OH} and midpoint (V_M) of the circuit.
- Assemble a testbench circuit for each gate.
- For each gate, run transient simulation using the parameters in Table 2. During the simulation process, students record input and output waveforms. Then, students measure some timing measurements and power in Table 4.

Parameters	Result
t_{rise} – Rising time (10% − 90%)	
t_{fall} – Falling time (90% − 10%)	
t_{pdr} – Rising propagation delay (90% − 50%)	
t_{pdf} – Falling propagation delay (10% − 50%)	
t_{pd} – Average propagation delay (50% - 50%)	
Dynamic power	
Static power	

Table 5: Measurement requirements for an inverter.

- For each gate, try to adjust the sizing of the PMOS and NMOS so that the V_M=V_{DD}/2 (for each input).

Laboratory 4:

Circuit Design for Basic Standard Cells

EXPERIMENT 3

Objective: Perform circuit design for a CMOS XOR logic gate.

Description: In this experiment, we perform circuit design for a CMOS XOR logic gate. The symbol and the schematic of this logic gate are shown in Figure 4. Students create the schematic and symbol for these gates, then run DC analysis and transient simulations.

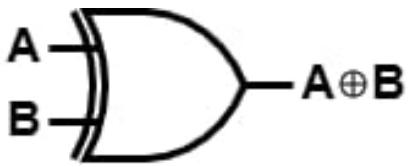

Figure 4a: The symbol of a XOR gate

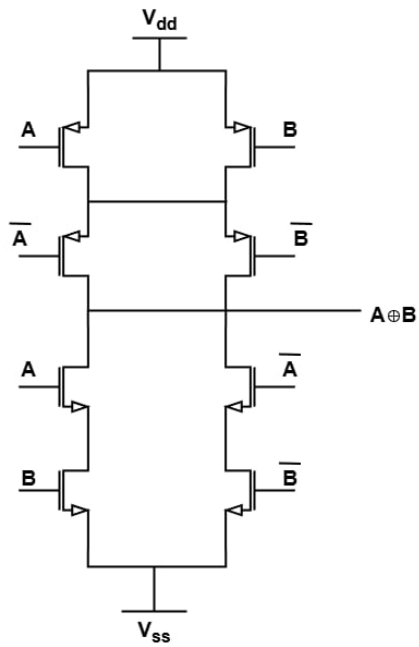

Figure 4b: The schematic of a CMOS XOR gate

Requirements:

- Provide the truth table of each gate and describe the operation of the CMOS circuit (Describe the operating regions and explain how the NMOS and PMOS turn on and off according to theory).

The sizing for each NMOS and PMOS (width/length/finger=120n/45n/2).

- To investigate **V_{out} with respect to each input**, what value (logic level and voltage) should be applied to the remaining input, and why?
- Run DC analysis for each input using the parameters in Table 1. During the simulation process, students record the following two results: output voltage values at various values

of V_{in} with a 0.1V step, plot the curve of V_{out}. Besides, *students can decrease the number of steps V_{in} to draw the curve of V_{out} for more precise.*

From the curve, find V_{IL}, V_{IH}, V_{OL} and V_{OH} and midpoint (V_M) of the circuit.

- Assemble a testbench circuit for this gate.
- Run transient simulation using the parameters in Table 2. During the simulation process, students record input and output waveforms. Then, students measure some timing measurements and power in Table 4.

Parameters	Result
t_{rise} – Rising time ($10\% - 90\%$)	
t_{fall} – Falling time ($90\% - 10\%$)	
t_{pdr} – Rising propagation delay ($90\% - 50\%$)	
t_{pdf} – Falling propagation delay ($10\% - 50\%$)	
t_{pd} – Average propagation delay (50% - 50%)	
Dynamic power	
Static power	

Table 6: Measurement requirements for an inverter.

- Based on the schematic of the XOR gate, design an XNOR gate with minimal changes compared to the XOR gate.

Laboratory 4:

Circuit Design for Basic Standard Cells

EXPERIMENT 4

Objective: Perform circuit design for a CMOS MUX circuit.

Description: In this experiment, we perform circuit design for a CMOS MUX circuit. The symbol and the schematic of this logic gate are shown in Figure 5. Students create the schematic and symbol for these gates, then run DC analysis and transient simulations.

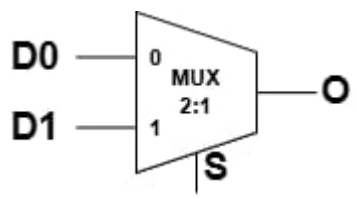

Figure 5a:
The symbol of MUX

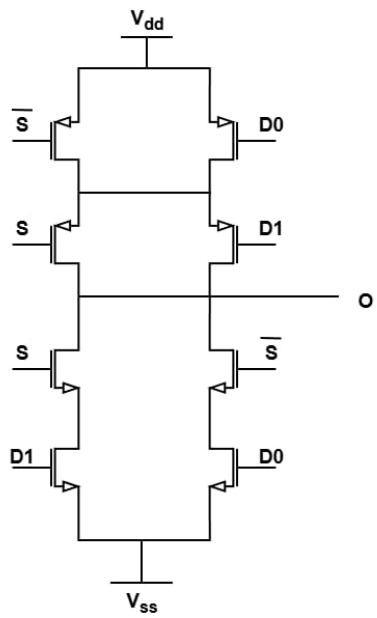

Figure 5b:
The schematic of MUX

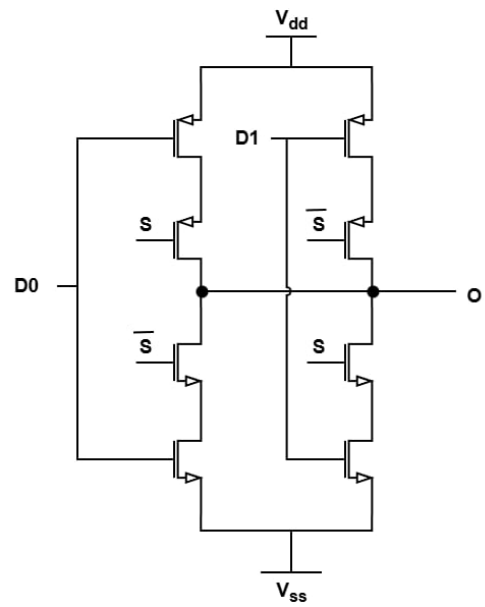

Figure 5c:
The schematic of MUX

Requirements:

- Provide the truth table of each gate and describe the operation of the CMOS circuit (Describe the operating regions and explain how the NMOS and PMOS turn on and off according to theory).

The sizing for each NMOS and PMOS (width/length/finger=120n/45n/2).

- To investigate **V_{out} with respect to each input**, what value (logic level and voltage) should be applied to the remaining input, and why?
- Run DC analysis for each input using the parameters in Table 1. During the simulation process, students record the following two results: output voltage values at various values

of V_{in} with a 0.1V step, plot the curve of V_{out}. Besides, *students can decrease the number of steps V_{in} to draw the curve of V_{out} for more precise.*

From the curve, find V_{IL}, V_{IH}, V_{OL} and V_{OH} and midpoint (V_M) of the circuit.

- Assemble a testbench circuit for this gate.
- Run transient simulation using the parameters in Table 2. During the simulation process, students record input and output waveforms. Then, students measure some timing measurements and power in Table 4.

Parameters	Result
t_{rise} – Rising time ($10\% - 90\%$)	
t_{fall} – Falling time ($90\% - 10\%$)	
t_{pdr} – Rising propagation delay ($90\% - 50\%$)	
t_{pdf} – Falling propagation delay ($10\% - 50\%$)	
t_{pd} – Average propagation delay (50% - 50%)	
Dynamic power	
Static power	

Table 7: Measurement requirements for an inverter.

- Compare the design characteristics of the two CMOS circuits used to implement a MUX.