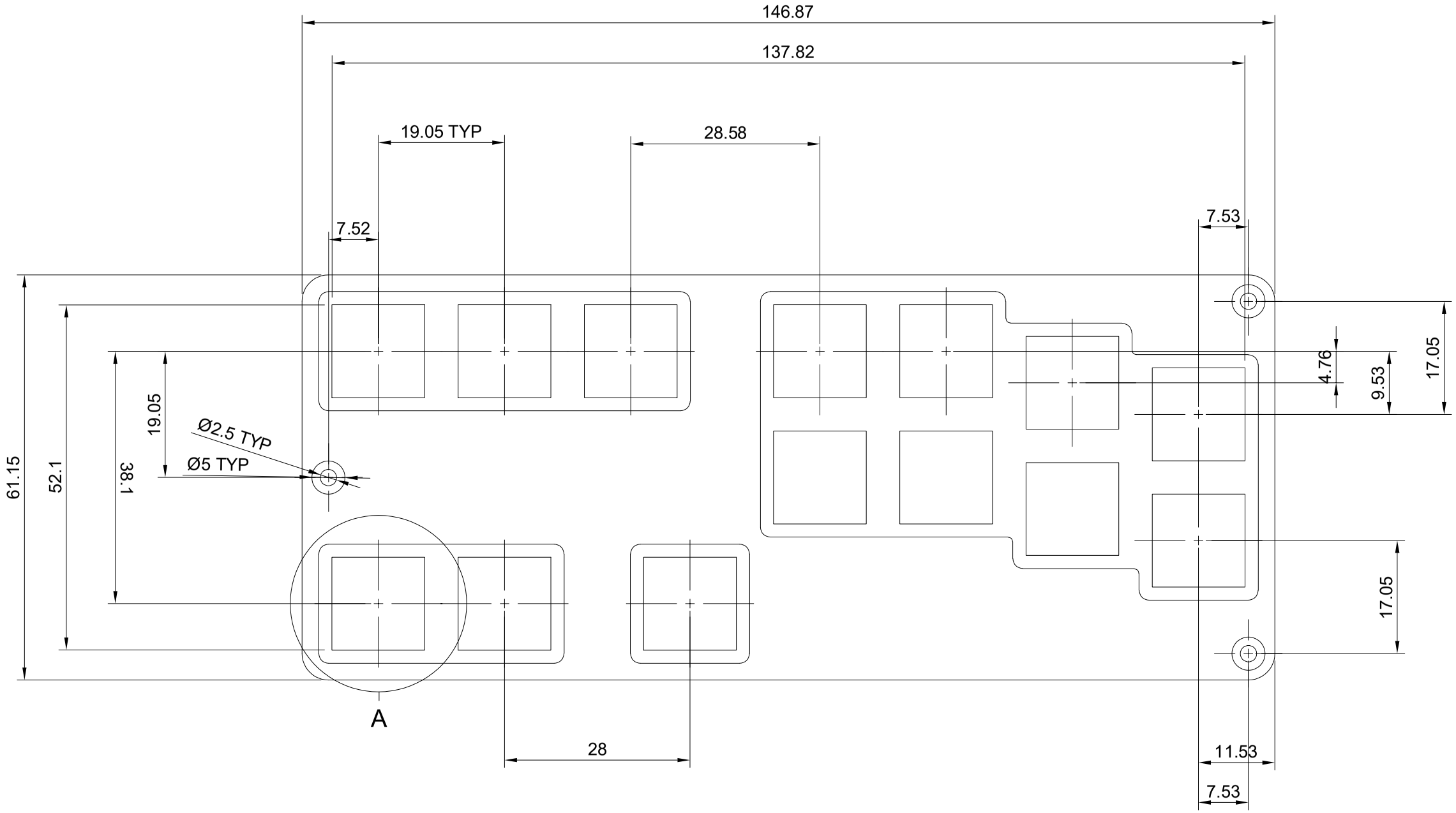

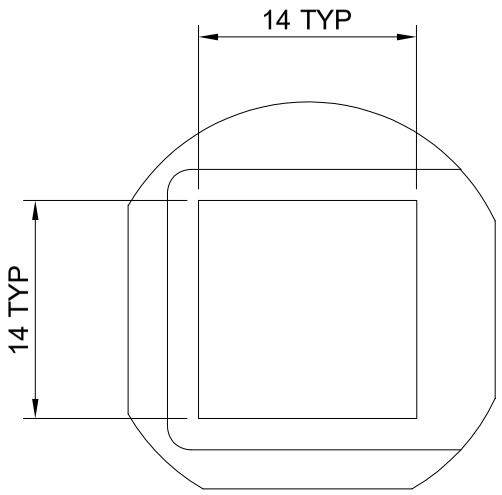

A (2:1)

Dept.	Technical reference	Created by Tai Alt 6/3/2023	Approved by
		Document type	Document status
		Title Fight Stick Fusion 360	DWG No.
			Rev. / Date of issue / Sheet 1/1