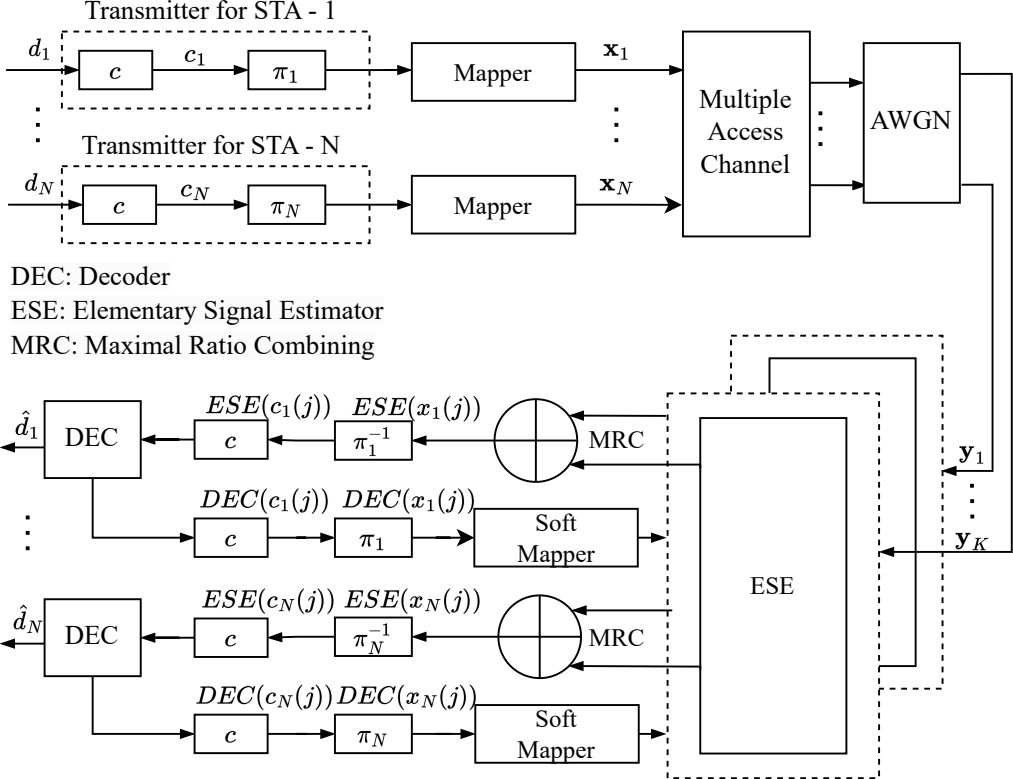
Transmitter for STA - 1
$d_1$
$c$
$c_1$
$\pi_1$
Mapper
$\mathbf{x}_1$
Multiple Access Channel
AWGN
Transmitter for STA - N
$d_N$
$c$
$c_N$
$\pi_N$
Mapper
$\mathbf{x}_N$
DEC: Decoder
ESE: Elementary Signal Estimator
MRC: Maximal Ratio Combining
$\hat{d}_1$
DEC
$ESE(c_1(j))$
$ESE(x_1(j))$
$c$
$\pi_1^{-1}$
MRC
$\mathbf{y}_1$
$DEC(c_1(j))$
$DEC(x_1(j))$
$c$
$\pi_1$
Soft Mapper
$\mathbf{y}_K$
ESE
$\hat{d}_N$
DEC
$ESE(c_N(j))$
$ESE(x_N(j))$
$c$
$\pi_N^{-1}$
MRC
$DEC(c_N(j))$
$DEC(x_N(j))$
$c$
$\pi_N$
Soft Mapper