DSLab. 08 Karnaugh Map (2)

Lab. 08 Karnaugh Map (2)

- Design and Verify the following circuits using Verilog HDL and Schematic
- Verilog
  - Behavioral level modeling
  - Dataflow modeling
  - Structural level modeling
- Schematic
- Please write and upload the lab report (Lab08) -- Due on 2023/10/27 23:59

Two-level Implementation (1/2)

- Consider the function defined in Table 3.1

Combine the 1's:

$$F(x,y,z) = x'z + xz'$$

Combine the 0's :

$$F'(x,y,z) = xz + x'z'$$

$$F(x,y,z) = (x'+z')(x+z)$$

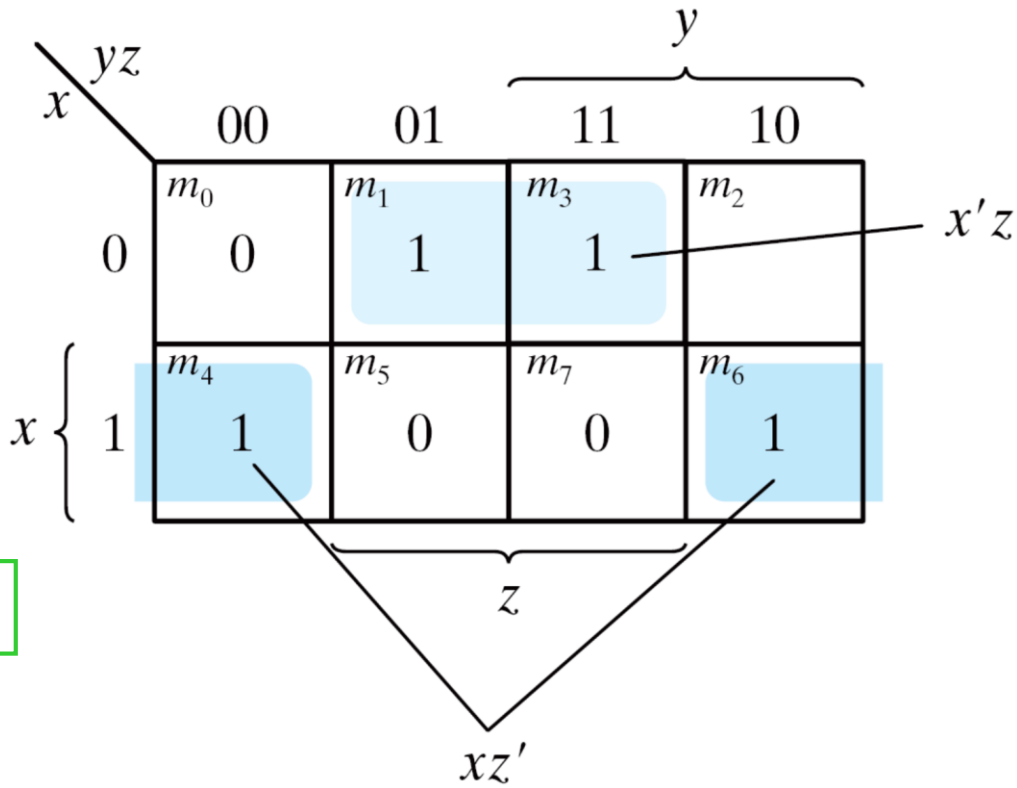

NAND Implementation

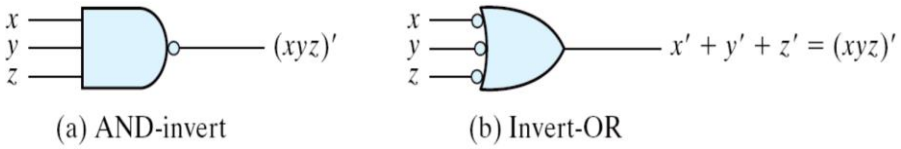

- Example 3.9

$$F(x,y,z)=\sum(1,2,3,4,5,7) \Rightarrow F(x,y,z)=xy'+x'y+z$$

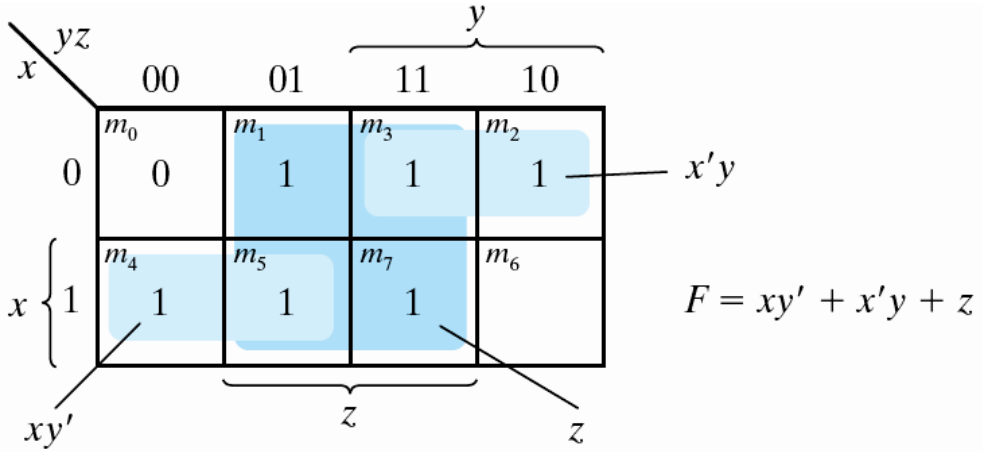

(a)

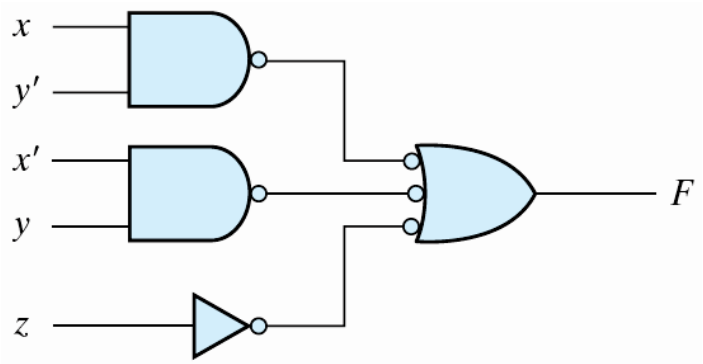

(b)

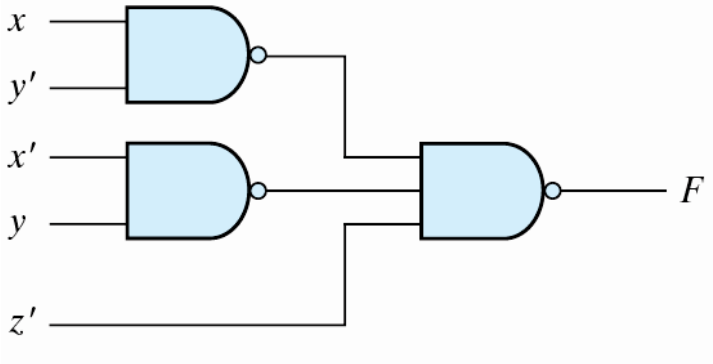

(c)

NOR Implementation

- Two graphic symbols for a NOR gate

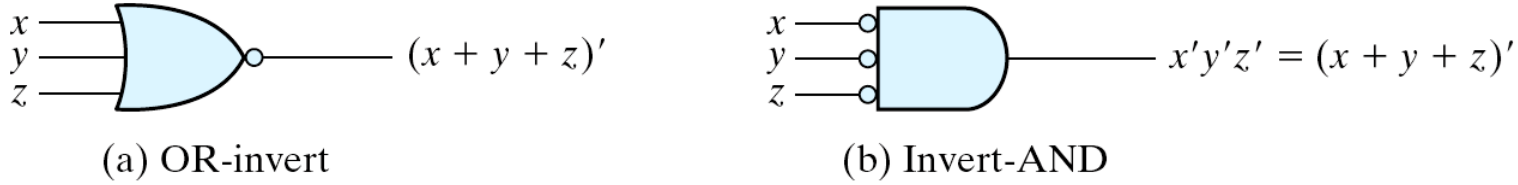

(a) OR-invert (b) Invert-AND

Example: $F = (A + B)(C + D)E$

NOR-NOR = product of sums

OR-AND logic => NOR-NOR logic

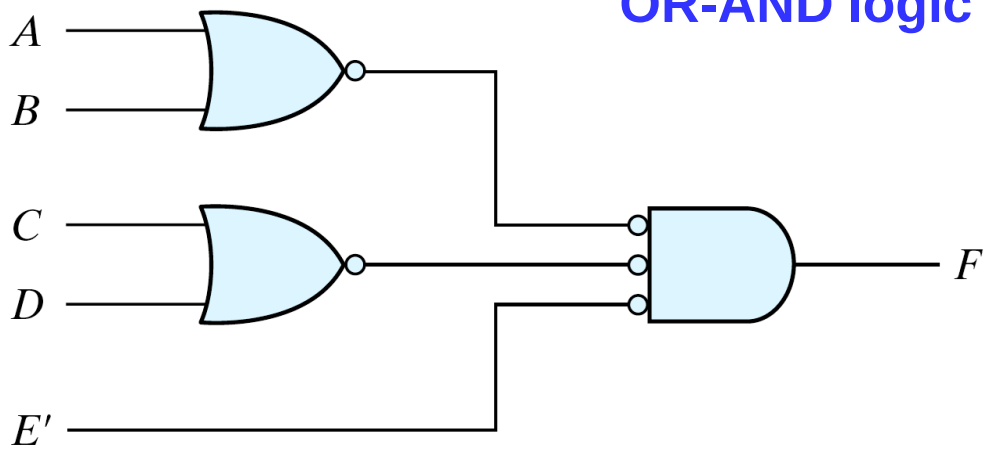

Two-level Implementation (2/2)

- Example 3.10
  - $F' = x'y+xy'+z$ (F' : sum of products)
  - $F = (x'y+xy'+z)'$ (F: AOI implementation)

  - $F = x'y'z' + xyz'$ (F: sum of products)
  - $F = [(x'y'z' + xyz')']'$
  - $F = ((x+y+z)(x'+y'+z))'$ (F: OAI)

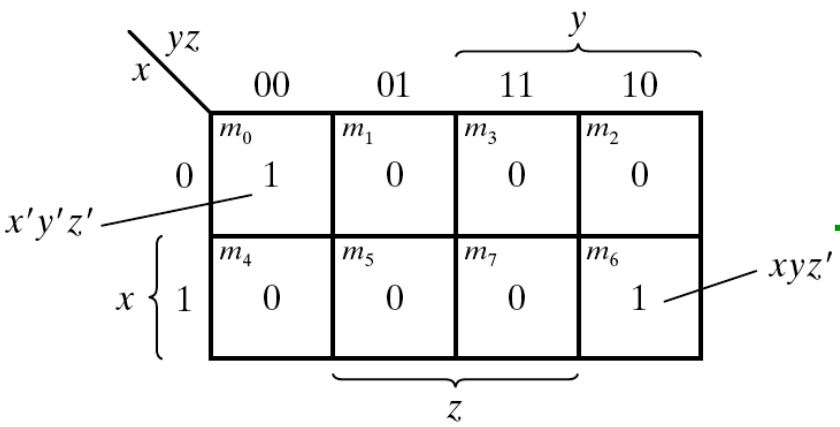

$F = x'y'z' + xyz'$

$F' = x'y + xy' + z$

(a) Map simplification in sum of products

AND-OR-Invert Implementation

- AND-OR-INVERT (AOI) Implementation
  - NAND-AND = AND-NOR = AOI
  - $F = (AB+CD+E)' = (AB)'\,(CD)'\,(E)'$
  - $F' = AB+CD+E$ **(sum of products)**

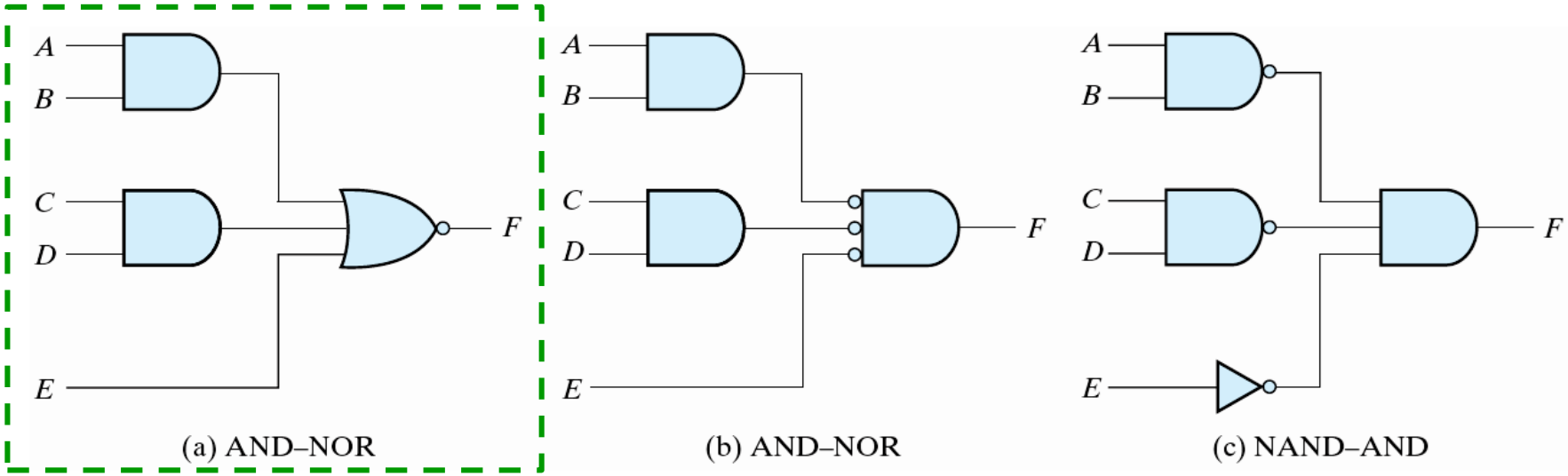

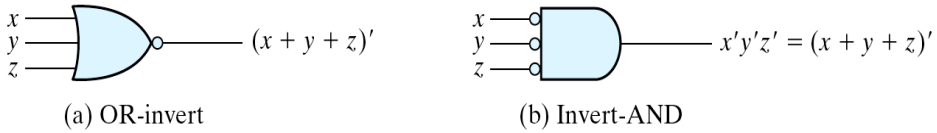

OR-AND-Invert Implementation

- OR-AND-INVERT (OAI) Implementation
  - OR-NAND = NOR-OR = OAI
  - $F = ((A+B)(C+D)E)' = (A+B)'+(C+D)'+E'$
  - $F' = (A+B)(C+D)E$ **(product of sums)**

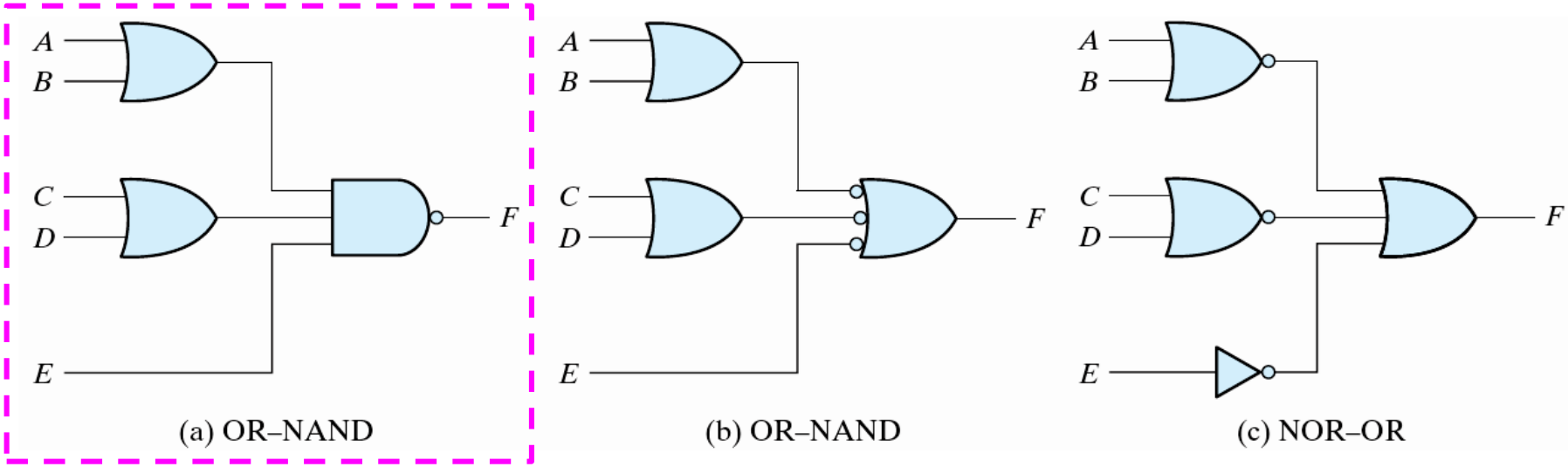

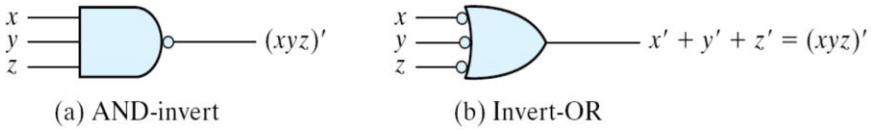

Exercise 1

- $F = (AB' + A'B)(C + D')$
  - Implement *F* with AND-OR gates (denoted as *F1*)
  - Implement *F* with multi-level NAND gate circuit (denoted as *F2*)
  - Implement *F* with multi-level NOR gate circuit (denoted as *F3*)
  - Verify *F1* = *F2* = *F3* (using Verilog Structural level modeling)

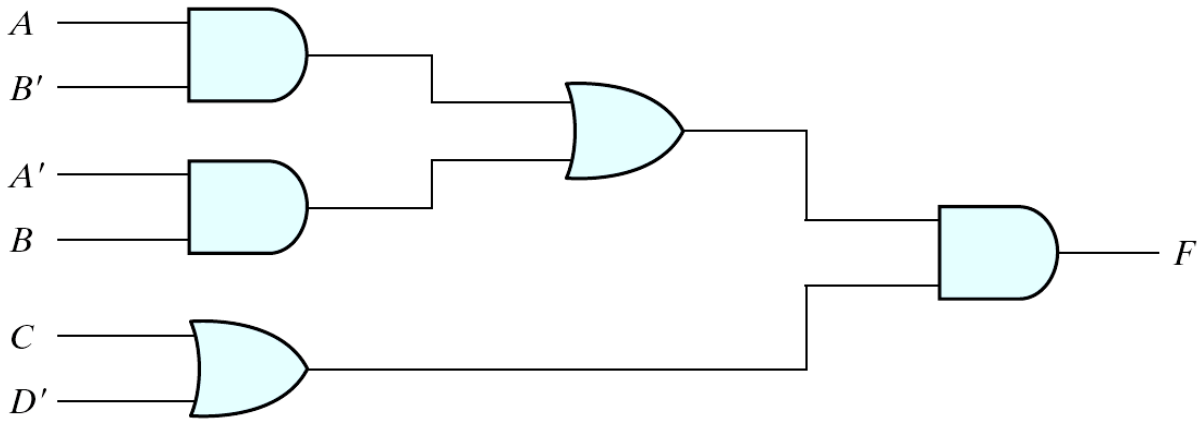

(a) AND–OR gates

Exercise 2

- Simplify the following Boolean function using Karnaugh maps: $F(x,y,z) = \Sigma\,(1,2,3,4,5,7)$
- Find the simplest sum of products (*F4*) and draw its logic diagram (two-level implementation)
  - Implement *F4* with two-level NAND gate circuit (denoted as *F5*)
  - *F6* = (*F4*')', implement *F6* with two-level OR-NAND (OAI) circuit
  - Verify *F4* = *F5* = *F6* (using Verilog Structural level modeling)

Exercise 3

- Simplify the following Boolean function using Karnaugh maps: $F(x,y,z) = \Sigma\,(1,2,3,4,5,7)$
- Find the simplest product of sums (*F7*) and draw its logic diagram (two-level implementation)
  - Implement *F7* with two-level NOR gate circuit (denoted as *F8*)
  - Implement *F7* with two-level AND-NOR (AOI) circuit (denoted as *F9*)
  - Verify *F7* = *F8* = *F9* (using Verilog Structural level modeling)