DSLab. 11 7-bit Hamming Code

Lab. 11 7-bit Hamming Code

- Design and Verify the following circuits using Verilog HDL
  - Implement Boolean function of 4 input variable using 8-to-1 MUX
  - Parity Checker and Error Corrector of 7-bit Hamming Code
- Verilog
  - Behavioral level modeling
  - Dataflow modeling
  - Structural level (Gate-level) modeling
- Please write and upload the lab report (Lab11) -- Due on 2023/11/17 23:59

Behavioral Description of 4-to-1 line Multiplexer

```
module mux_4x1_beh(
   output reg     Y,
   input          I0, I1, I2, I3,
   input [1: 0]   Select
);

  always @ (I0, I1, I2, I3, Select)
     case (Select)
        2'b00:    Y = I0;
        2'b01:    Y = I1;
        2'b10:    Y = I2;
        2'b11:    Y = I3;
     endcase
  endmodule
```

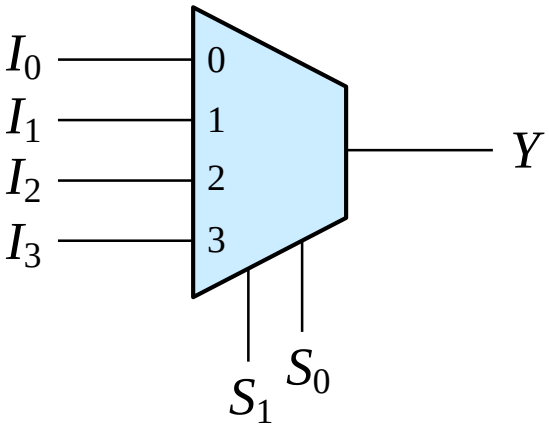

S_1	S_0	Y
0	0	I_0
0	1	I_1
1	0	I_2
1	1	I_3

(b) Function table

Dataflow Description of 2-to-4-line Decoder

```
module decoder_2x4_df (D, A, B, enable);
  output [0: 3]     D;
  input             A, B;
  input             enable;


  assign D[0] = !((~A) && (!B) && (!enable)),
         D[1] = !((!A) && B & !enable),
         D[2] = !(A & (!B) && !enable),
         D[3] = !(A & B && !enable);

endmodule
```

A	B	D_0	D_1	D_2	D_3
0	0	***E***	1	1	1
0	1	1	***E***	1	1
1	0	1	1	***E***	1
1	1	1	1	1	***E***

E	A	B	D_0	D_1	D_2	D_3
1	X	X	1	1	1	1
0	0	0	0	1	1	1
0	0	1	1	0	1	1
0	1	0	1	1	0	1
0	1	1	1	1	1	1

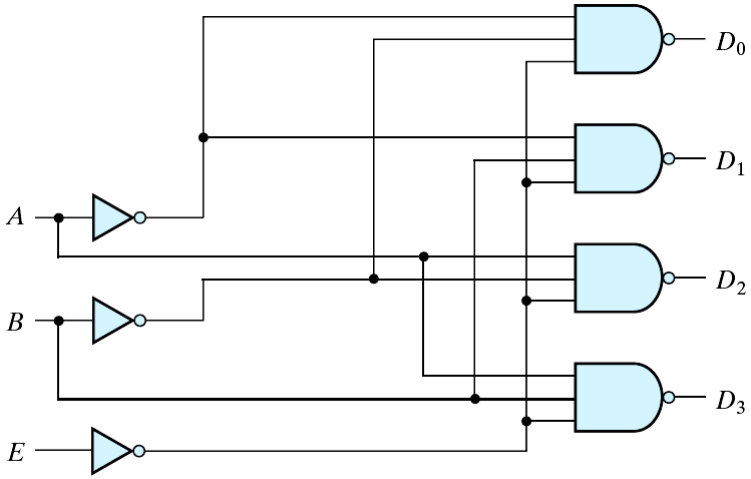

(a) Logic diagram

Gate-level Description of 2-to-4-line Decoder

```
module decoder_2x4_gates (D, A, B, enable);
   output [0: 3]    D;
   input            A, B;
   input            enable;
   wire             A_not, B_not, enable_not;

    not
       G1  (A_not, A),
       G2  (B_not, B),
       G3  (enable_not, enable);
    nand
       G4  (D[0], A_not, B_not, enable_not),
       G5  (D[1], A_not, B, enable_not),
       G6  (D[2], A, B_not, enable_not),
       G7  (D[3], A, B, enable_not);

endmodule
```

A	B	D_0	D_1	D_2	D_3
0	0	***E***	1	1	1
0	1	1	***E***	1	1
1	0	1	1	***E***	1
1	1	1	1	1	***E***

E	A	B	D_0	D_1	D_2	D_3
1	X	X	1	1	1	1
0	0	0	0	1	1	1
0	0	1	1	0	1	1
0	1	0	1	1	0	1
0	1	1	1	1	1	1

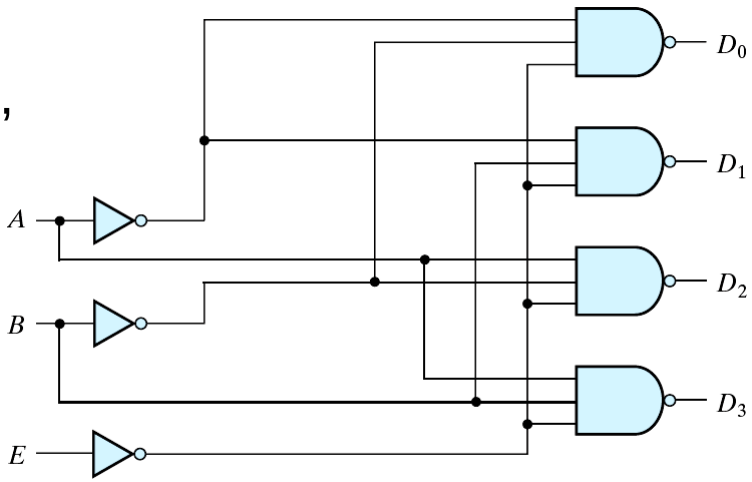

(a) Logic diagram

Exercise 1: Boolean Function Implementation (1/2)

- Implement and verify the following Boolean function of 4 input variable using 8-to-1 MUX
  - $F(A, B, C, D) = \Sigma(1, 2, 5, 8, 9, 10, 12, 13)$

A	B	C	D	F	
0	0	0	0	0	$F = D$
0	0	0	1	1	
0	0	1	0	0	$F = D$
0	0	1	1	1	
0	1	0	0	1	$F = D'$
0	1	0	1	0	
0	1	1	0	0	$F = 0$
0	1	1	1	0	
1	0	0	0	0	$F = 0$
1	0	0	1	0	
1	0	1	0	0	$F = D$
1	0	1	1	1	
1	1	0	0	1	$F = 1$
1	1	0	1	1	
1	1	1	0	1	$F = 1$
1	1	1	1	1	

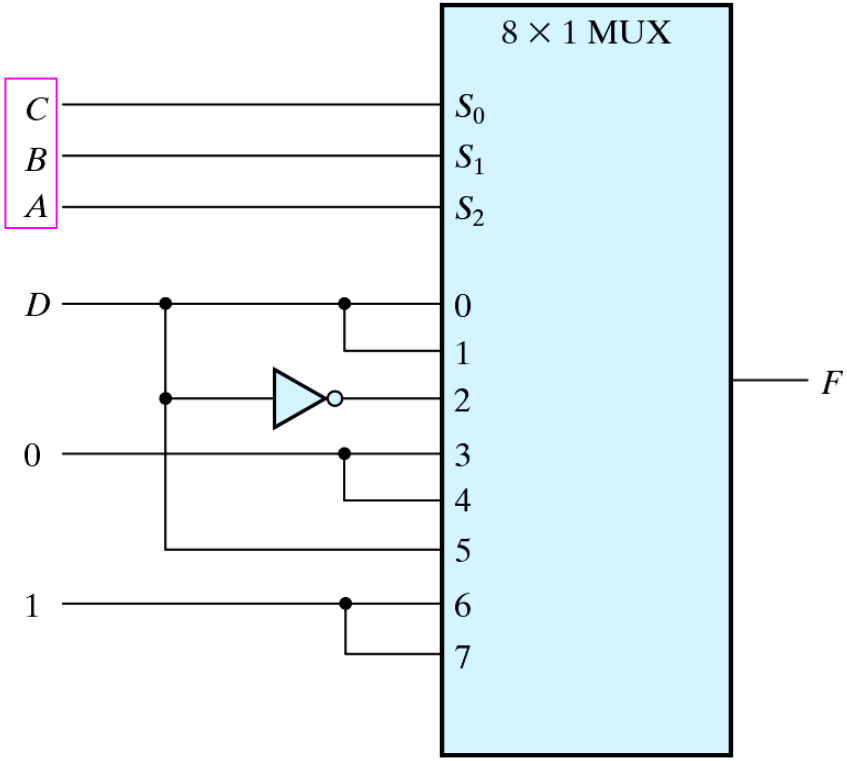

Exercise 1: Boolean Function Implementation (2/2)

- Implement and verify the following Boolean function of 4 input variable using 8-to-1 MUX
  - $F(A, B, C, D) = \Sigma(1, 2, 5, 8, 9, 10, 12, 13)$

A	B	C	D	F
0	0	0	0	
0	0	0	1	
0	0	1	0	
0	0	1	1	
0	1	0	0	
0	1	0	1	
0	1	1	0	
0	1	1	1	
1	0	0	0	
1	0	0	1	
1	0	1	0	
1	0	1	1	
1	1	0	0	
1	1	0	1	
1	1	1	0	
1	1	1	1	

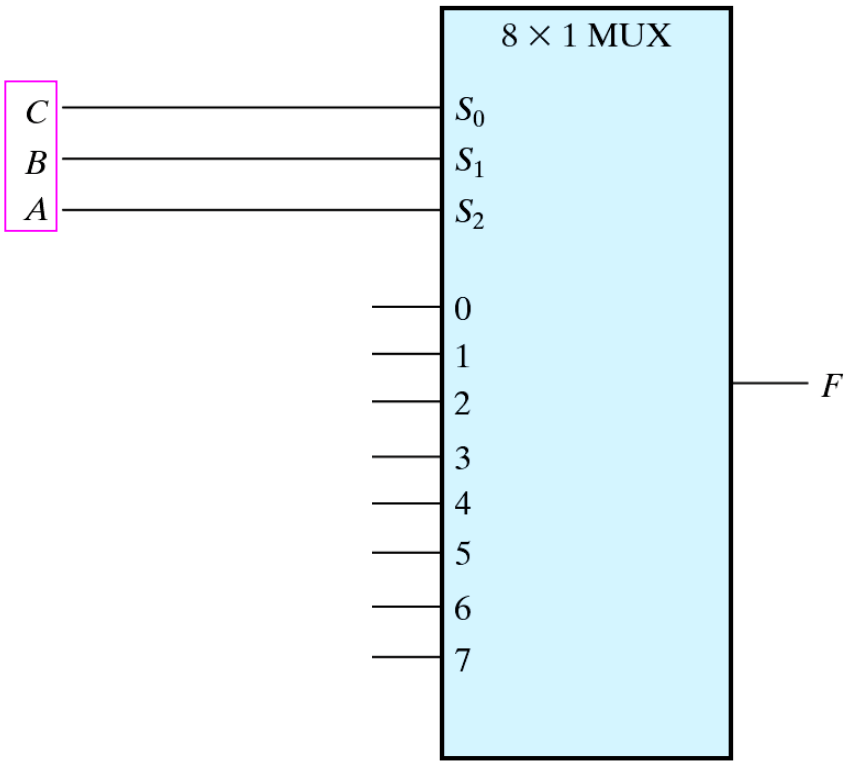

Exercise 2: Parity Checker and Error Corrector

- Design and verify the Parity Checker and Error Corrector of 7-bit Hamming Code using Structural level (Gate-level) modeling

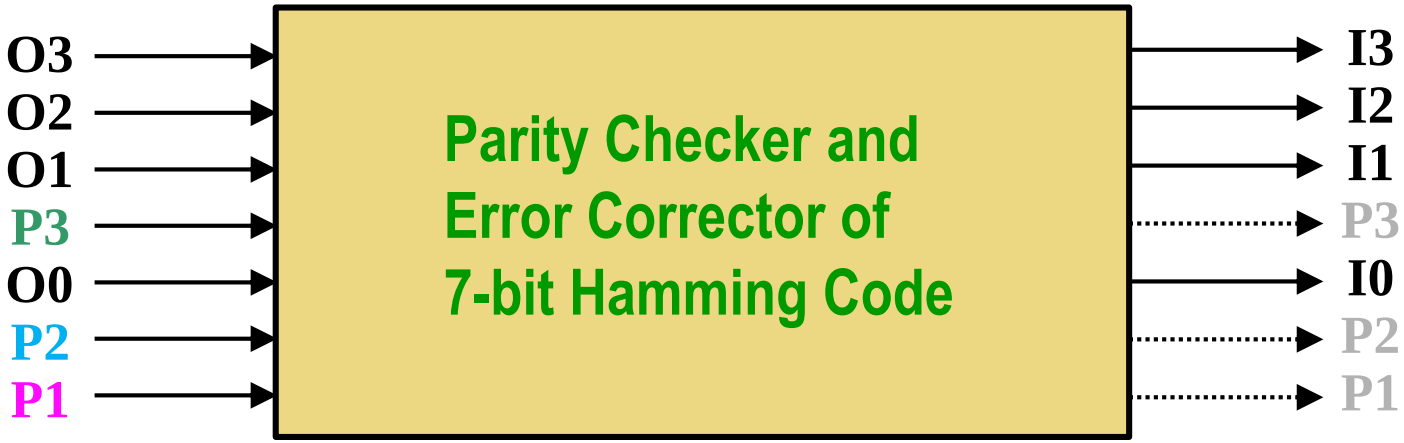

7	6	5	4	3	2	1	Bit positions
1	0	1	0	1	0	1	correct code word
O3	O2	O1	P3	O0	P2	P1	

Test bench:

0	0	1	0	1	0	1
1	1	1	0	1	0	1
1	0	0	0	1	0	1
1	0	1	0	0	0	1

7-bit Hamming Code (1/5)

- Parity generation of 7-bit Hamming code (even parity)

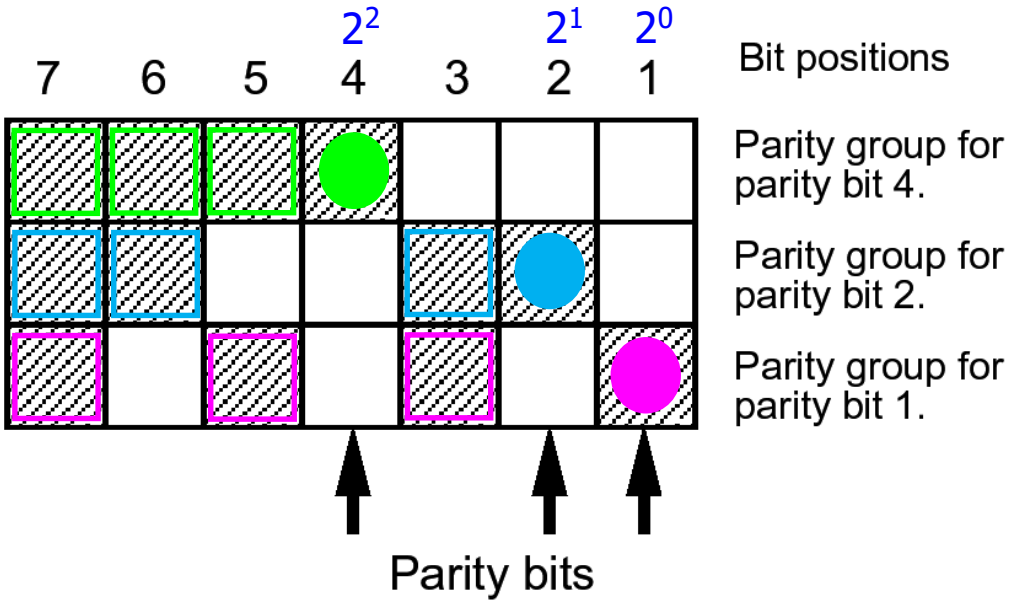

7	6	5	4	3	2	1	Bit positions
1	0	1	0	1	0	1	correct code word
O3	O2	O1	P3	O0	P2	P1	

7-bit Hamming Code (2/5)

- Parity Generation $\Rightarrow$ $P = x \oplus y \oplus z$

Table 3.3
Even-Parity-Generator Truth Table

Three-Bit Message			Parity Bit
x	*y*	*z*	*P*
0	0	0	0
0	0	1	1
0	1	0	1
0	1	1	0
1	0	0	1
1	0	1	0
1	1	0	0
1	1	1	1

Copyright ©2012 Pearson Education, publishing as Prentice Hall

O3 = I3
O2 = I2
O1 = I1
O0 = I0

P3 = I3⊕I2⊕I1
P2 = I3⊕I2⊕I0
P1 = I3⊕I1⊕I0

7-bit Hamming Code (3/5)

- Parity Generation ⇒ Parity Checker

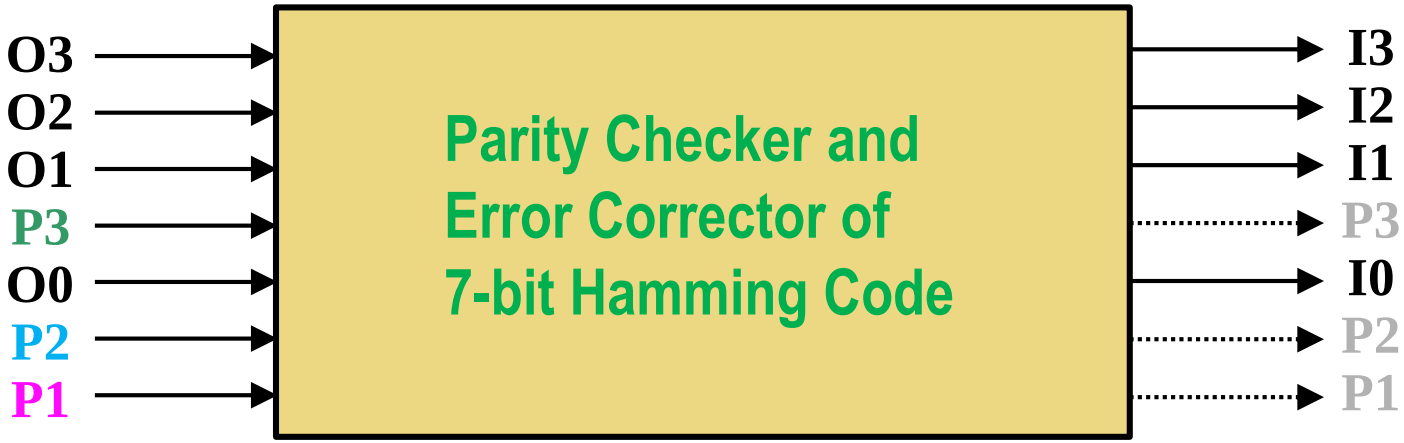

7-bit Hamming Code (4/5)

- Parity Checking $\Rightarrow$ $C = x \oplus y \oplus z \oplus P$
  - C=1: an odd number of data bit error
  - C=0: correct or an even # of data bit error

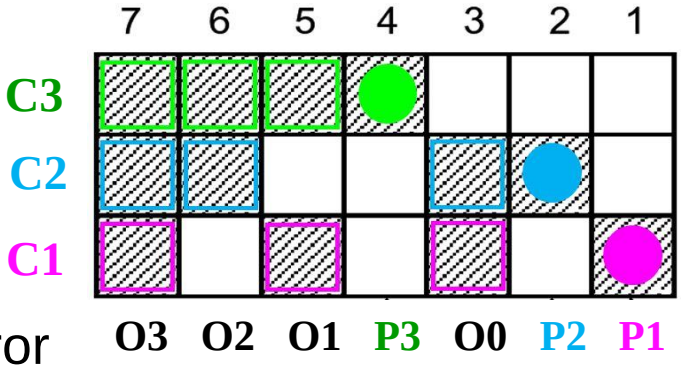

Table 3.4
Even-Parity-Checker Truth Table

Four Bits Received				Parity Error Check
x	y	z	P	C
0	0	0	0	0
0	0	0	1	1
0	0	1	0	1
0	0	1	1	0
0	1	0	0	1
0	1	0	1	0
0	1	1	0	0
0	1	1	1	1
1	0	0	0	1
1	0	0	1	0
1	0	1	0	0
1	0	1	1	1
1	1	0	0	0
1	1	0	1	1
1	1	1	0	1
1	1	1	1	0

Copyright ©2012 Pearson Education, publishing as Prentice Hall

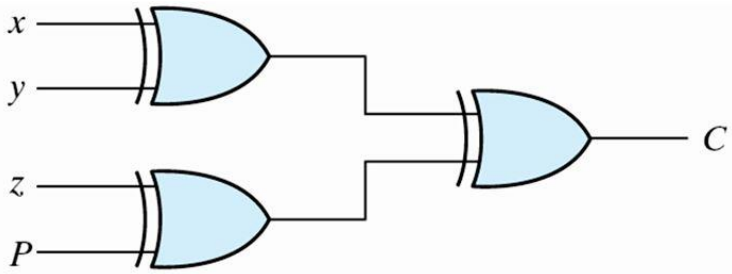

(b) 4-bit even parity checker

C3 = O3⊕O2⊕O1⊕P3

C2 = O3⊕O2⊕O0⊕P2

C1 = O3⊕O1⊕O0⊕P1

7-bit Hamming Code (5/5)

7	6	5	4	3	2	1
1	0	1	0	1	0	1
I3	I2	I1	P3	I0	P2	P1

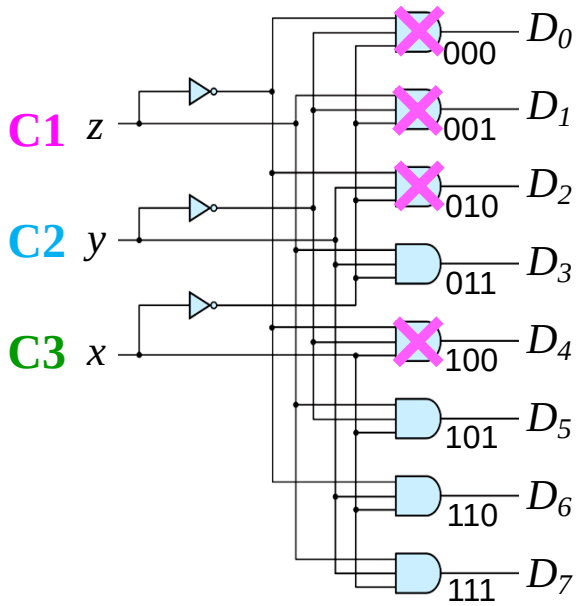

$x \oplus 0 = x$
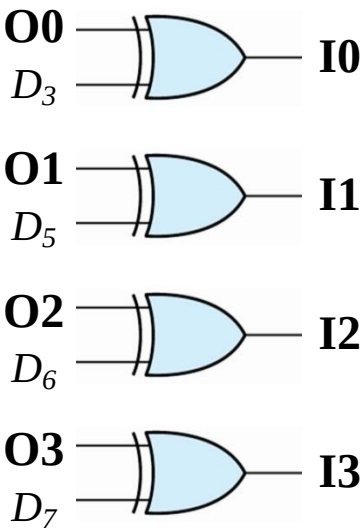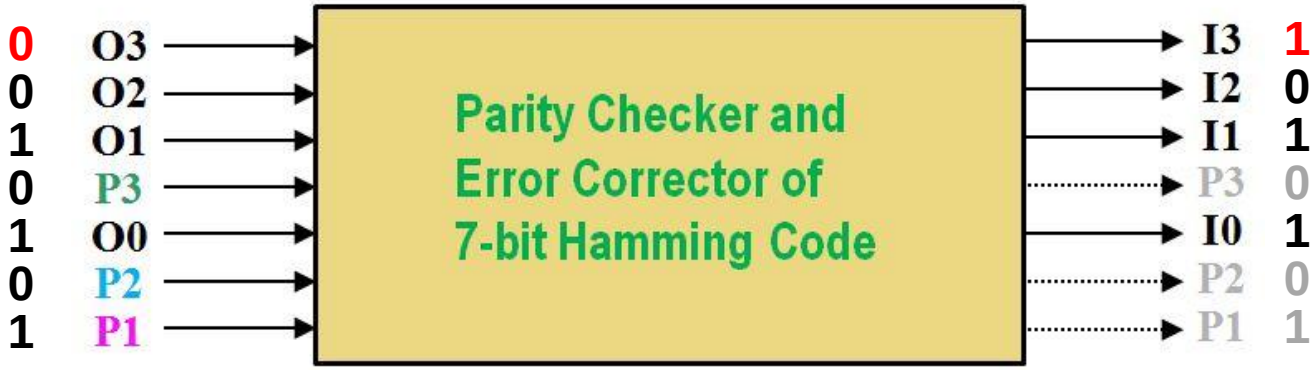
$x \oplus 1 = x'$