DSLab.14 Registers & Counters

Lab. 14 Registers & Counters

- Design and Verify the following circuits using Verilog HDL
  - Four-bit universal shift register
  - BCD synchronous counter

- Please write and upload the lab report (Lab14) -- Due on 2023/12/08 23:59

Example 1: State Diagram-Based HDL Model (Moore) (1/4)

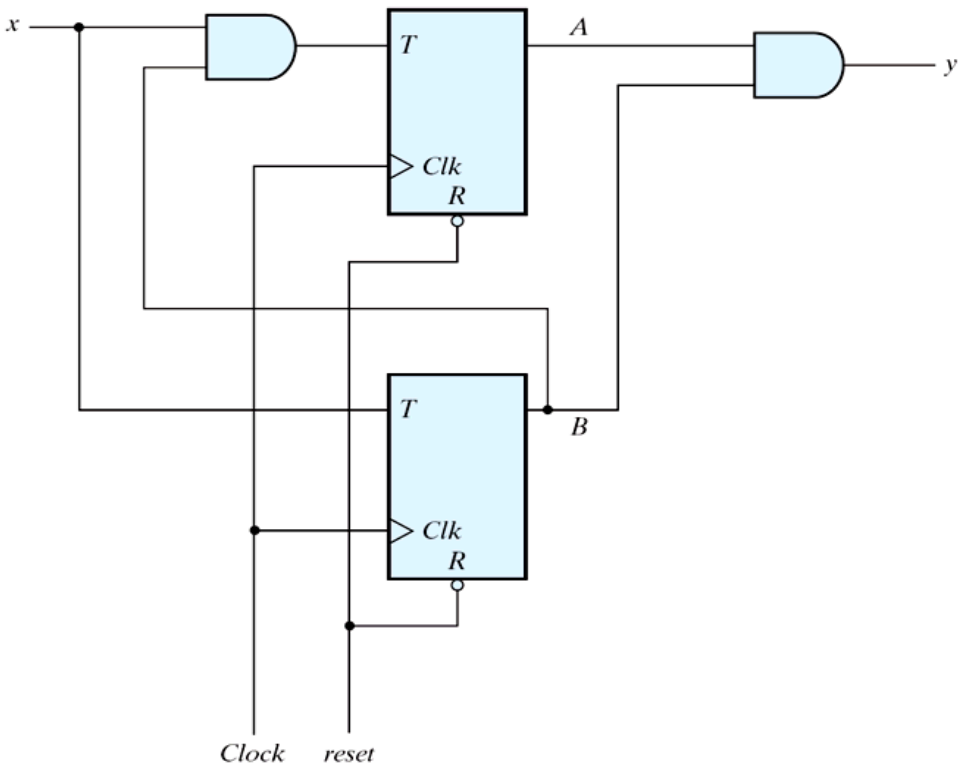

Fig. 20

Present State		Input	Next State		Output
A	B	x	A	B	y
0	0	0	0	0	0
0	0	1	0	1	0
0	1	0	0	1	0
0	1	1	1	0	0
1	0	0	1	0	0
1	0	1	1	1	0
1	1	0	1	1	1
1	1	1	0	0	1

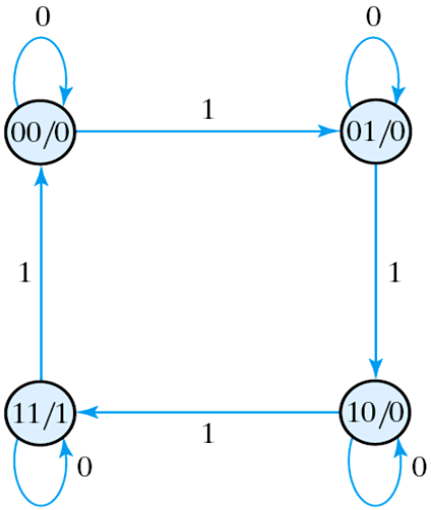

Example 1: State Diagram-Based HDL Model (Moore) (2/4)

Structural model (Fig. 20)

```
module Moore_Model_STR_Fig_5_20 (
   output   y_out, A, B,
   input    x_in, clock, reset
);
  wire      A, TB;

// Flip-flop input equations
    assign TA = x_in & B;
    assign TB = x_in;
//output equation
    assign y_out = A & B;
// Instantiate Toggle flip-flops
    Toggle_flip_flop_3 M_A (A, TA, clock, reset);
    Toggle_flip_flop_3 M_B (B, TB, clock, reset);

endmodule
```

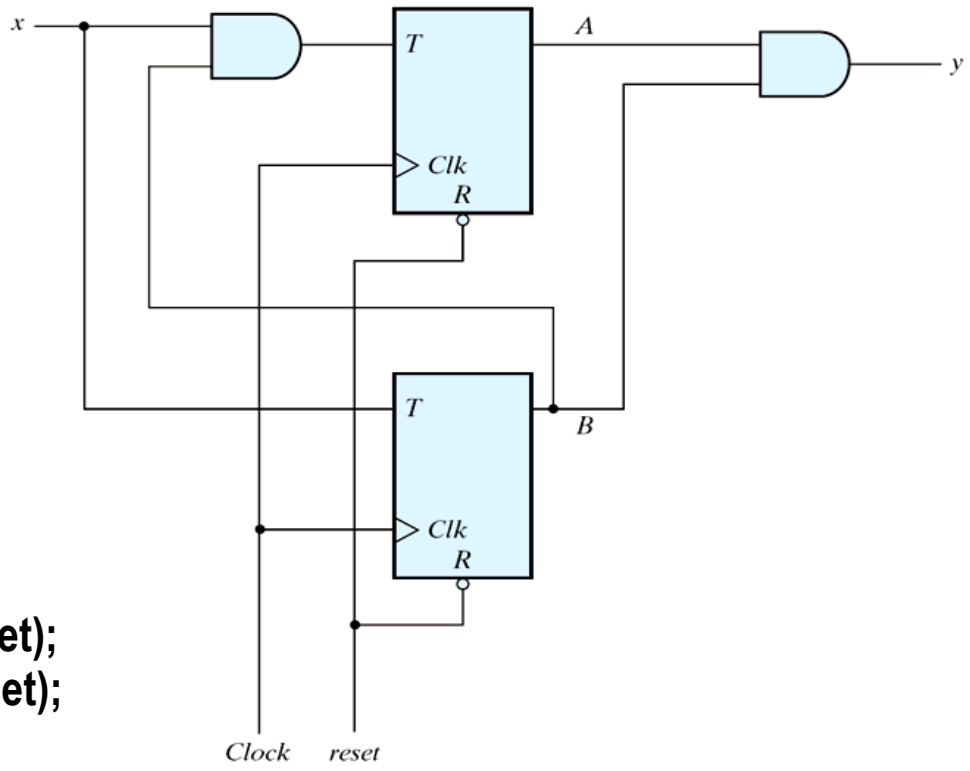

Fig. 20

Example 1: State Diagram-Based HDL Model (Moore) (3/4)

Behavioral model (State diagram)

```
module Moore_Model_Fig_5_20 (
  output   y_out,
  input    x_in, clock, reset
);
  reg [1: 0]   state;
  parameter  S0 = 2'b00, S1 = 2'b01, S2 = 2'b10, S3 = 2'b11;

  always @ (posedge clock, negedge reset)
   if (reset == 0) state <= S0;    // Initialize to state S0
   else case (state)
      S0: if (x_in)  state <= S1; else state <= S0;
      S1: if (x_in)  state <= S2; else state <= S1;
      S2: if (x_in)  state <= S3; else state <= S2;
      S3: if (x_in)  state <= S0; else state <= S3;
   endcase

  assign y_out = (state == S3); // Output of flip-flops
endmodule
```

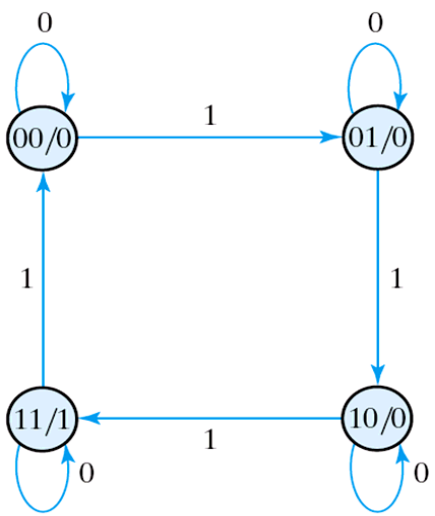

Fig. 5.20

Present State		Input	Next State		Output
A	*B*	*x*	*A*	*B*	*y*
0	0	0	0	0	0
0	0	1	0	1	0
0	1	0	0	1	0
0	1	1	1	0	0
1	0	0	1	0	0
1	0	1	1	1	0
1	1	0	1	1	1
1	1	1	0	0	1

Example 1: State Diagram-Based HDL Model (Moore) (4/4)

```
module t_Moore_Fig_5_20;
  wire      t_y_out_2, t_y_out_1;
  reg       t_x_in, t_clock, t_reset;

  Moore_Model_Fig_5_20  M1  (t_y_out_1, t_x_in, t_clock, t_reset);
  Moore_Model_STR_Fig_5_20  M2  (t_y_out_2, A, B, t_x_in, t_clock, t_reset);

  initial #200 $finish;
  initial begin
        t_reset = 0;
        t_clock = 0;
    #5 t_reset = 1;
    repeat (16)
      #5 t_clock = ~t_clock;
  end
  initial begin
          t_x_in = 0;
    #15 t_x_in = 1;
    repeat (8)
      #10 t_x_in = ~t_x_in;
  end
endmodule
```

Example 2: 4-bit universal shift register (1/3)

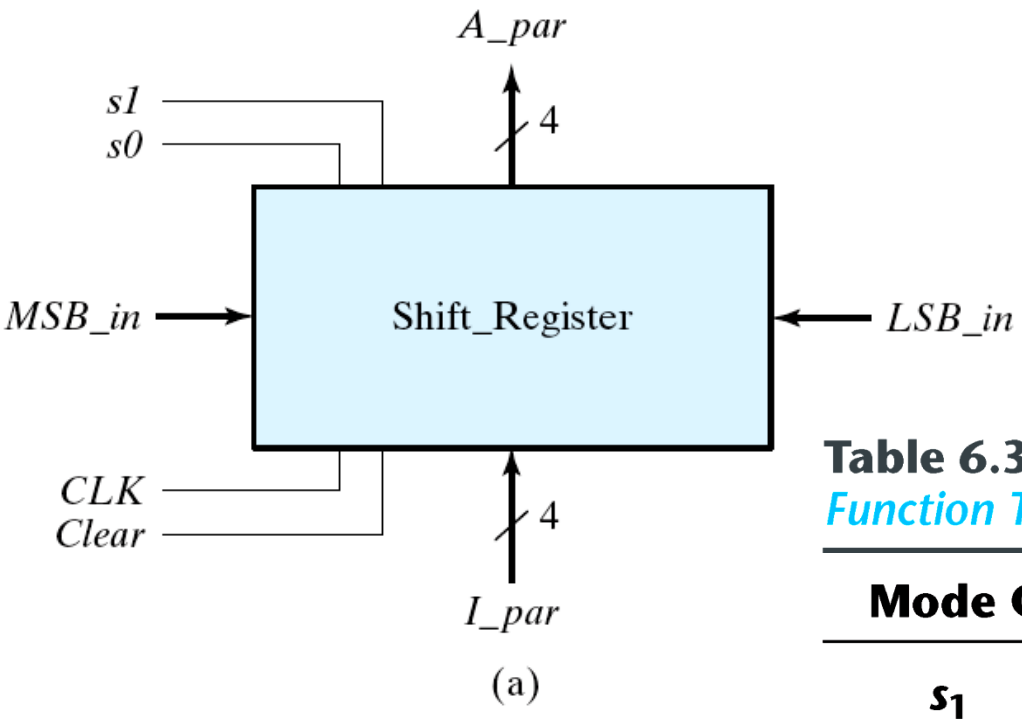

Fig. 6.7
Four-bit universal shift register

Table 6.3
Function Table for the Register of Fig. 6.7

Mode Control		
s_1	s_0	**Register Operation**
0	0	No change
0	1	Shift right
1	0	Shift left
1	1	Parallel load

Example 2: 4-bit universal shift register (2/3)

Behavioral model

```
// Behavioral description of a 4-bit universal shift register
// Fig. 6.7 and Table 6.3

module Shift_Register_4_beh (
  output reg   [3: 0]   A_par,              // Register output
  input        [3: 0]   I_par,              // Parallel input
  input        s1, s0,                      // Select inputs
               MSB_in, LSB_in,              // Serial inputs
               CLK, Clear_b                 // Clock and Clear_b
);

 always @ (posedge CLK, negedge Clear_b)
     if (~Clear_b) A_par <= 4'b0000;
     else
       case ({s1, s0})
         2'b00: A_par <= A_par;                    // No change
         2'b01: A_par <= {MSB_in, A_par[3: 1]};    // Shift right
         2'b10: A_par <= {A_par[2: 0], LSB_in};    // Shift left
         2'b11: A_par <= I_par;                    // Parallel load of input
       endcase
endmodule
```

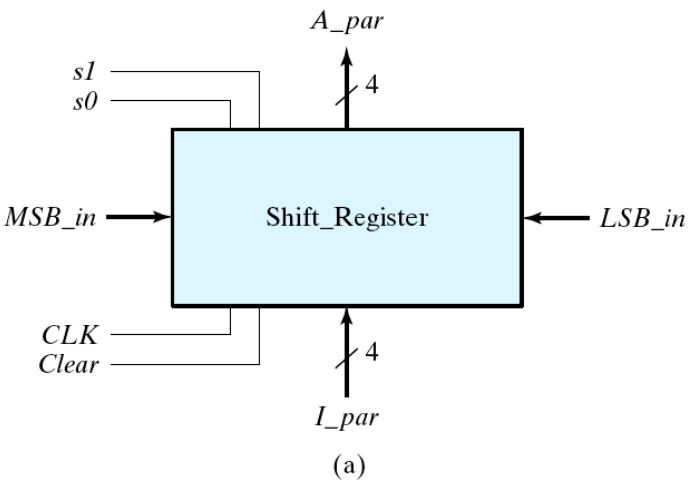

Table 6.3
Function Table for the Register of Fig. 6.7

Mode Control		
s_1	s_0	**Register Operation**
0	0	No change
0	1	Shift right
1	0	Shift left
1	1	Parallel load

Example 2: 4-bit universal shift register (3/3)

```
module t_Shift_Register_4_beh ();
  reg                 s1, s0,              // Select inputs
                      MSB_in, LSB_in,      // Serial inputs
                      clk, reset_b;        // Clock and Clear_b
  reg      [3: 0]     I_par;               // Parallel input
  wire     [3: 0]     A_par;               // Register output

  Shift_Register_4_beh M0 (A_par, I_par,s1, s0, MSB_in, LSB_in, clk, reset_b);

  initial #200 $finish;
  initial begin clk = 0; forever #5 clk = ~clk; end

  initial fork
    // test reset action load
    #3 reset_b = 1;
    #4 reset_b = 0;
    #9 reset_b = 1;

    // test parallel load
    #10 I_par = 4'hA;
    #10 {s1, s0} = 2'b11;

    // test shift right
    #30 MSB_in = 1'b0;
    #30 {s1, s0} = 2‘b01;

    // test shift left
    #80 LSB_in = 1'b1;
    #80 {s1, s0} = 2'b10;

    // test circulation of data
    #130 {s1, s0} = 2'b11;
    #140 {s1, s0} = 2'b00;

    // test reset on the fly
    #150 reset_b = 1'b0;
    #160 reset_b = 1'b1;
    #160 {s1, s0} = 2'b11;

  join
endmodule
```

Example 3: 4-bit ripple counter (1/2)

Table 6.4
Binary Count Sequence

A_3	A_2	A_1	A_0
0	0	0	0
0	0	0	1
0	0	1	0
0	0	1	1
0	1	0	0
0	1	0	1
0	1	1	0
0	1	1	1
1	0	0	0

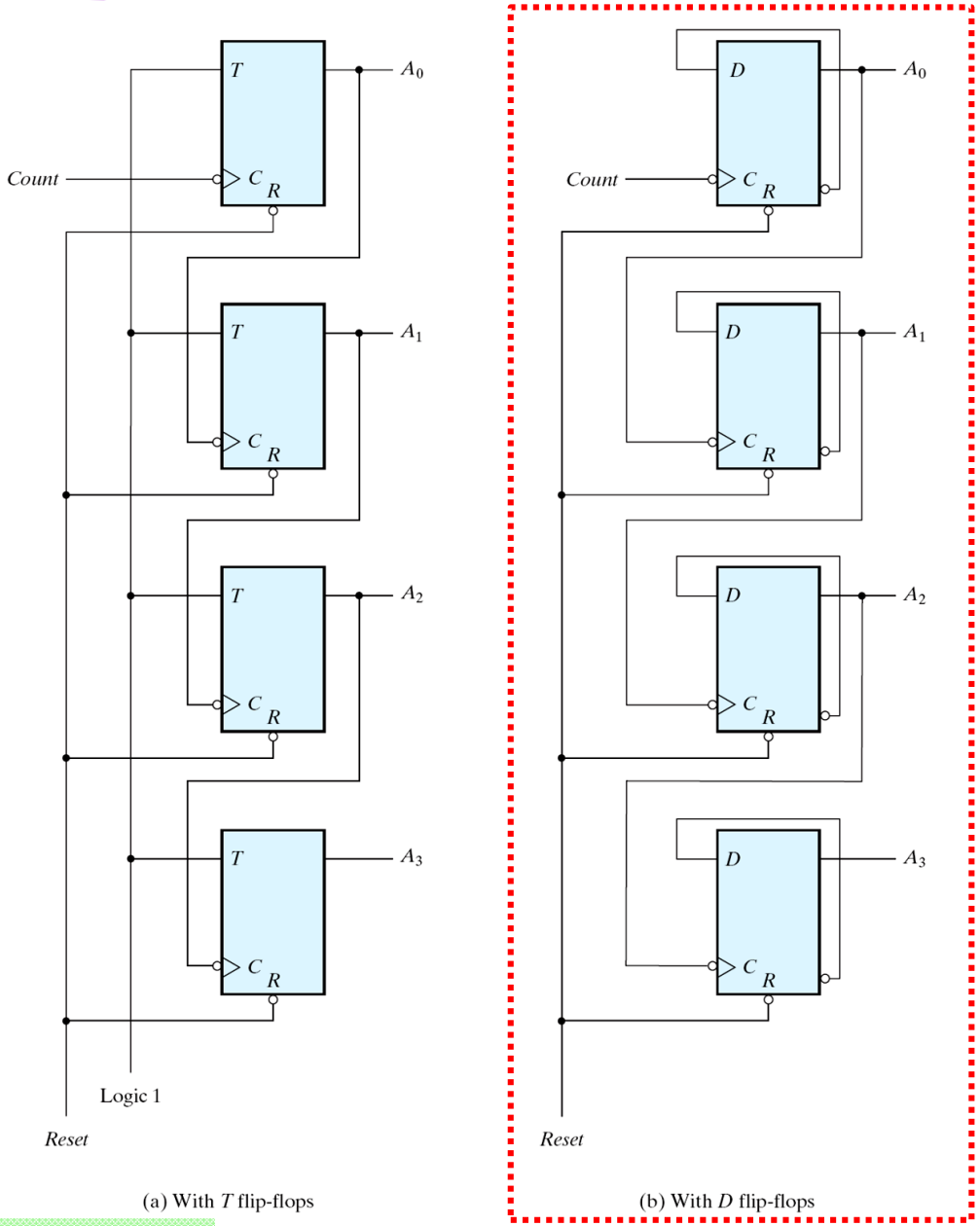

Fig. 6.8
Four-bit binary ripple counter

Example 3: 4-bit ripple counter (2/2)

Structural model

```
`timescale 1ns / 100 ps
module Ripple_Counter_4bit (A3,A2,A1,A0, Count, Reset);
  output A3,A2,A1,A0;
  input Count,Reset;
//Instantiate complementing flip-flop
   Comp_D_flip_flop F0 (A0, Count, Reset);
   Comp_D_flip_flop F1 (A1, A0, Reset);
   Comp_D_flip_flop F2 (A2, A1, Reset);
   Comp_D_flip_flop F3 (A3, A2, Reset);
endmodule

//Complementing flip-flop with delay
//Input to D flip-flop = Q'
module Comp_D_flip_flop (Q, CLK, Reset);
   output Q;
   input CLK, Reset;
   reg Q;
   always @ (negedge CLK, posedge Reset)
   if (Reset) Q <= 1'b0; else Q <= #2 ~Q;
endmodule
```

```
//Stimulus for testing ripple counter
module testcounter;
   reg Count;
   reg Reset;
   wire A0,A1,A2,A3;
//Instantiate ripple counter
   Ripple_Counter_4bit M0 (A3, A2, A1, A0, Count, Reset);
   always
   #5 Count = ~Count;
   initial
     begin
       Count = 1'b0;
       Reset = 1'b1;
       #4 Reset = 1'b0;
     end

   initial #170 $finish;

endmodule
```

Exercise 1: Four-bit universal shift register

- Design and verify the four-bit universal shift register using Verilog HDL
  - structural (gate-level) modeling
- Write an Verilog HDL stimulus to
  - (1) reset all flip-flops to 0, (2) parallel load “1111”,
  - (3) no change, (4) shift right => “0011”, (5) shift left => “1100”

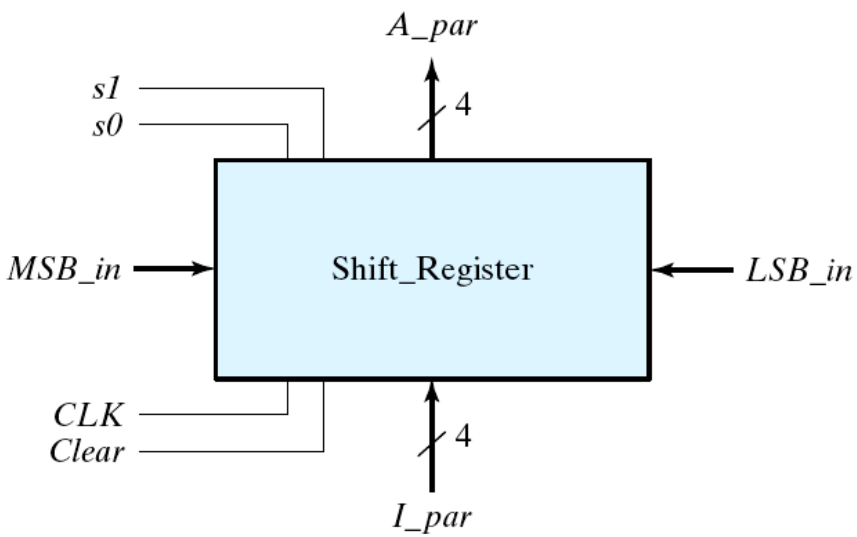

Fig. 6.7 Four-bit universal shift register

Table 6.3
Function Table for the Register of Fig. 6.7

Mode Control		
s_1	s_0	**Register Operation**
0	0	No change
0	1	Shift right
1	0	Shift left
1	1	Parallel load

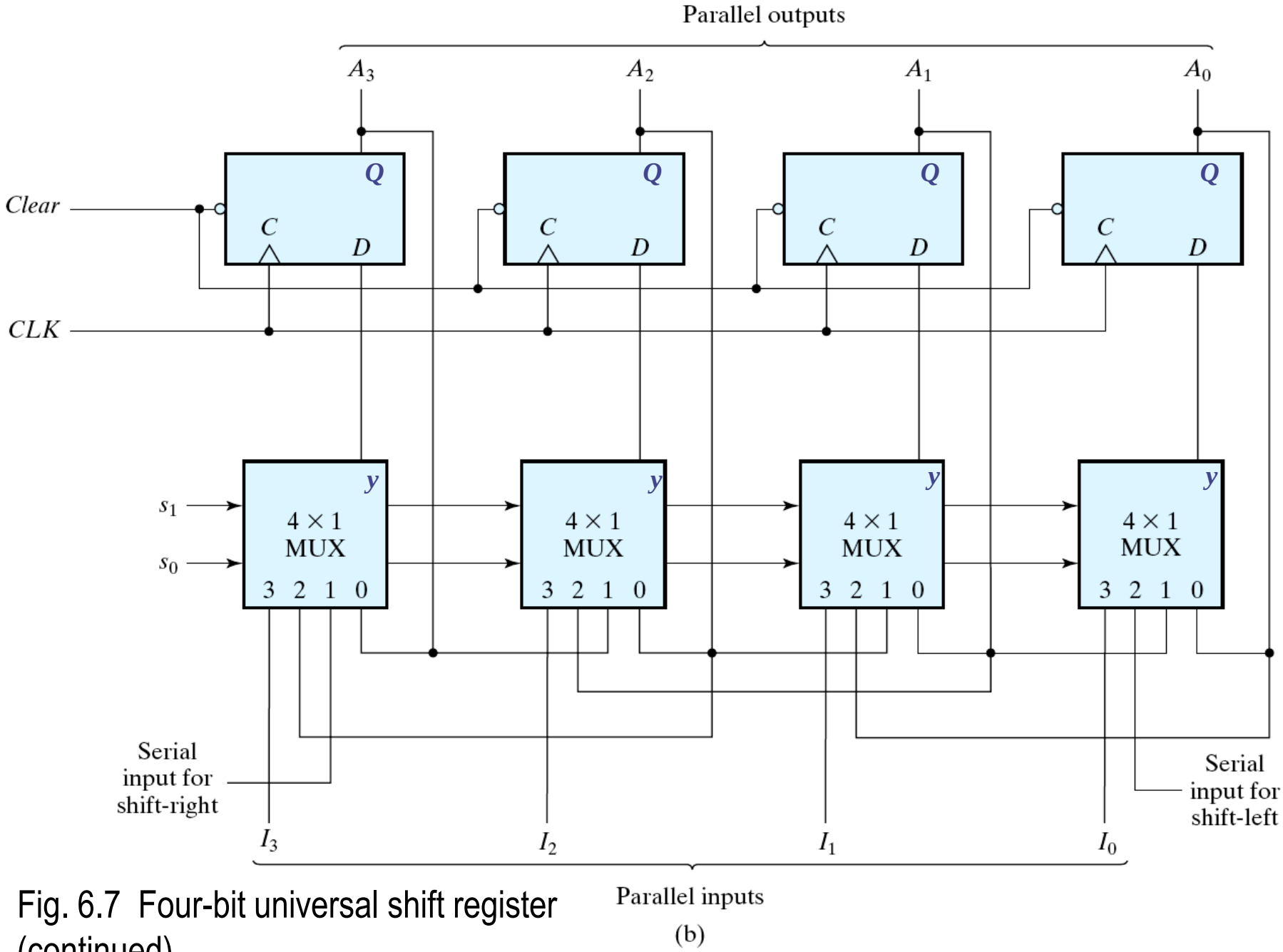

Fig. 6.7 Four-bit universal shift register (continued)

Exercise 2: BCD synchronous counter (1/2)

- Design and verify the BCD synchronous counter using T flip-flops with asynchronous reset and Verilog HDL
  - structural (gate-level) modeling
- Write an Verilog HDL stimulus to
  - (1) reset all flip-flops to 0, (2) count from “0000” to “0000”

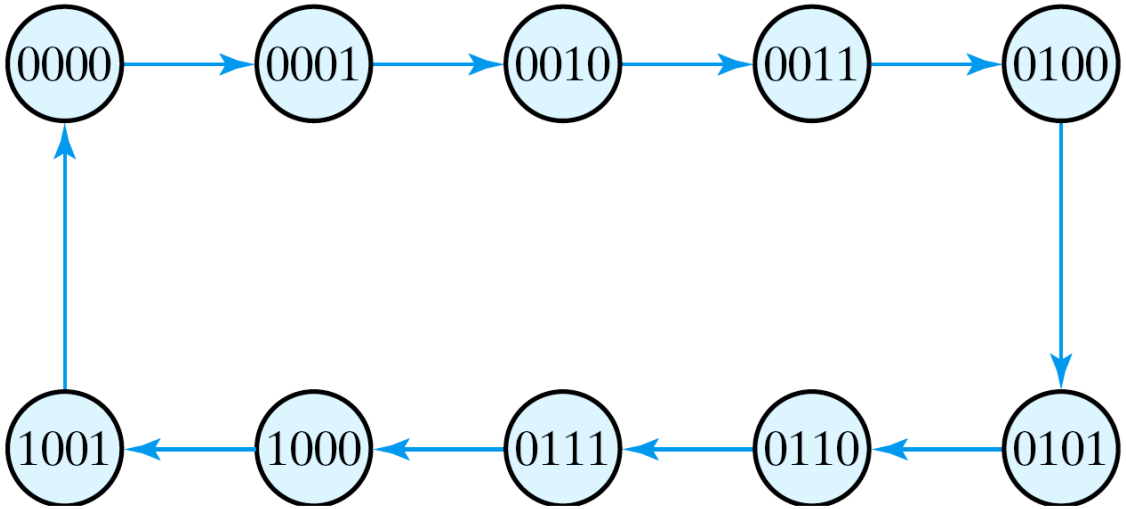

Fig. 6.9 State diagram of a decimal BCD counter

Exercise 2: BCD synchronous counter (2/2)

- Simplified functions:

$T_{Q1} = 1$

$T_{Q2} =$

$T_{Q4} =$

$T_{Q8} =$

$y =$

Table 6.5
State Table for BCD Counter

Present State				Next State				Output	Flip-Flop Inputs			
Q_8	Q_4	Q_2	Q_1	Q_8	Q_4	Q_2	Q_1	y	TQ_8	TQ_4	TQ_2	TQ_1
0	0	0	0	0	0	0	1	0	0	0	0	1
0	0	0	1	0	0	1	0	0	0	0	1	1
0	0	1	0	0	0	1	1	0	0	0	0	1
0	0	1	1	0	1	0	0	0	0	1	1	1
0	1	0	0	0	1	0	1	0	0	0	0	1
0	1	0	1	0	1	1	0	0	0	0	1	1
0	1	1	0	0	1	1	1	0	0	0	0	1
0	1	1	1	1	0	0	0	0	1	1	1	1
1	0	0	0	1	0	0	1	0	0	0	0	1
1	0	0	1	0	0	0	0	1	1	0	0	1