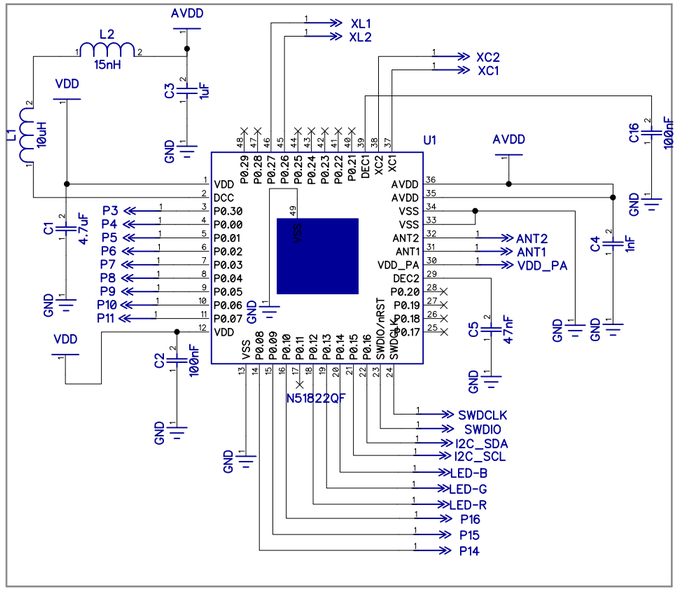

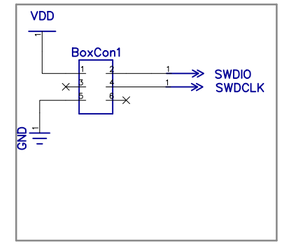

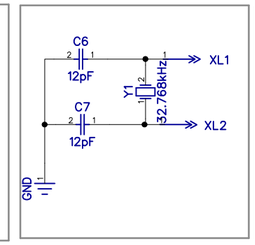

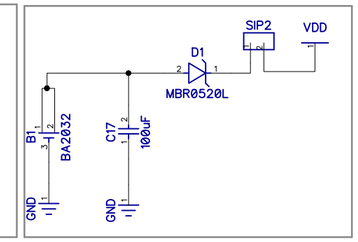

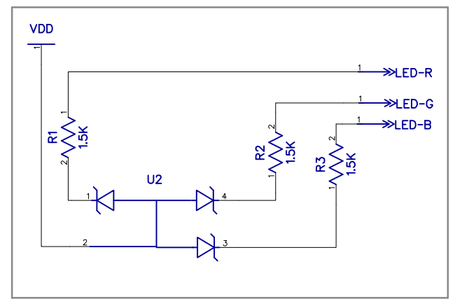

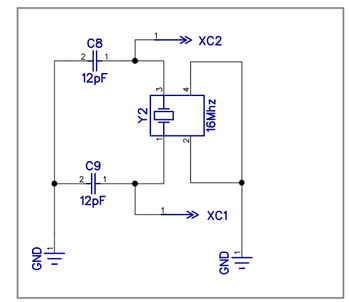

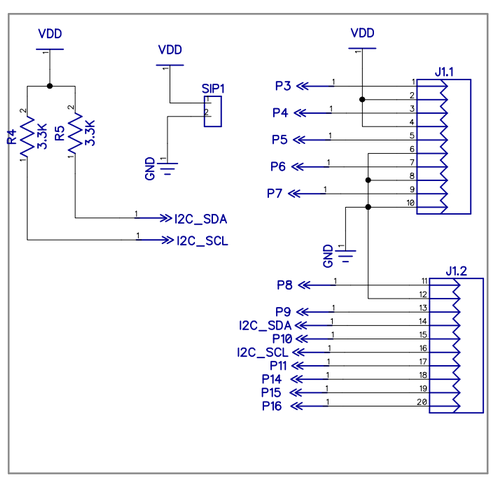

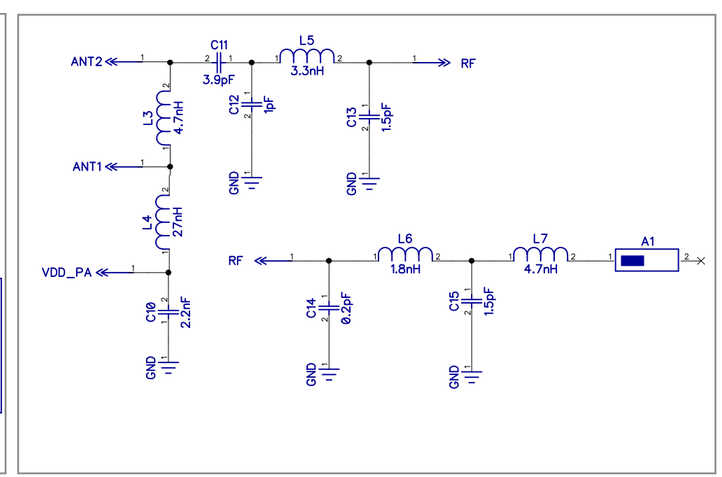

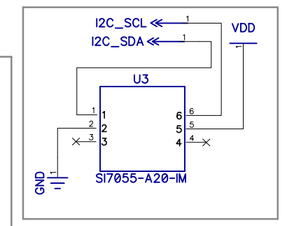

Talentica

nRF51822 Board

22 Sept 2016

PCBDesignStudio.com

Sheet Size - B