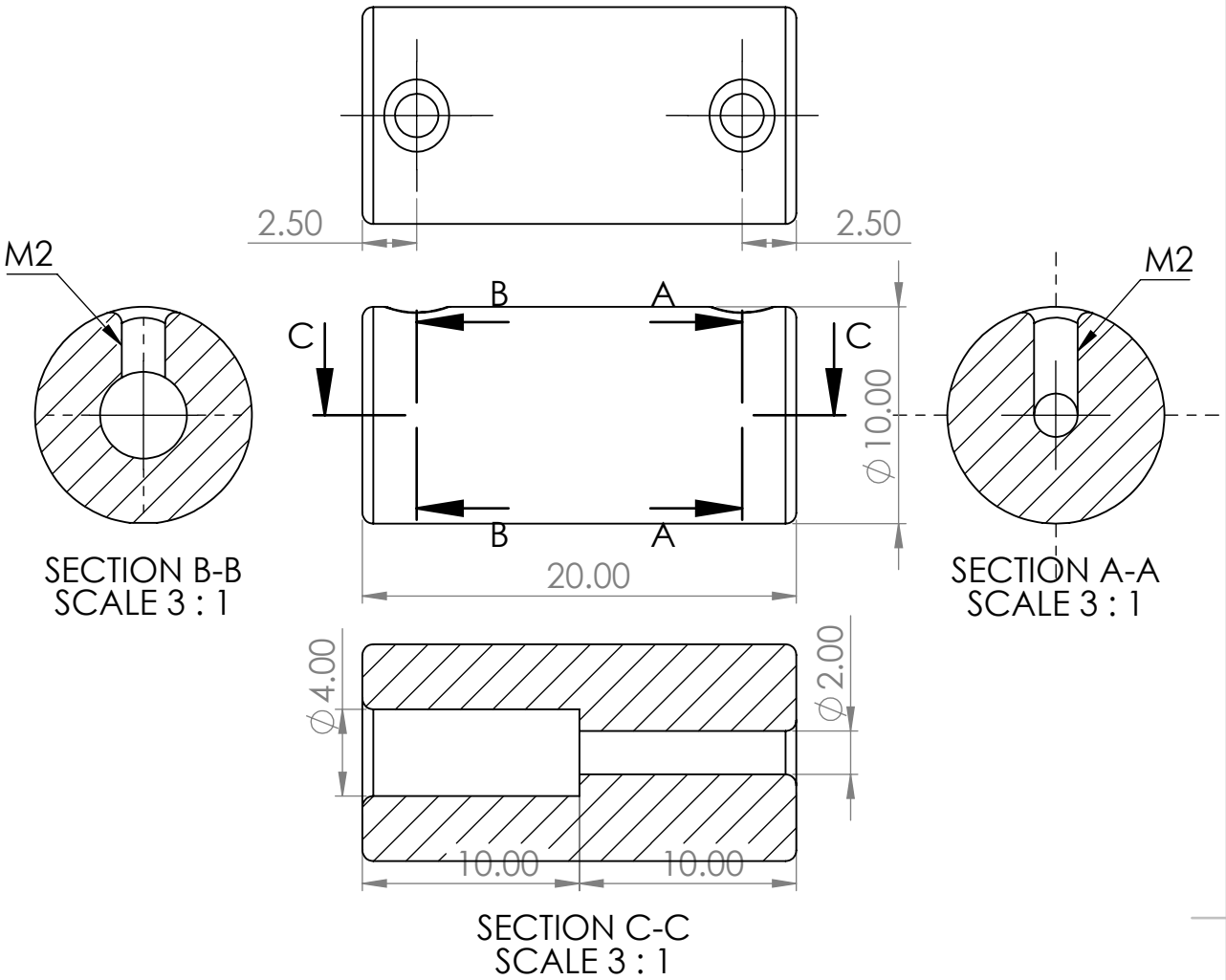

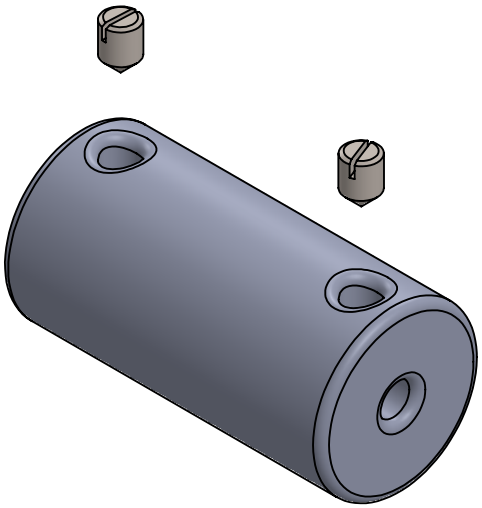

מחבר צירים (מנוע למדחף)
ציר מנוע 2 מ"מ, ציר מדחף 4 מ"מ

UNLESS OTHERWISE SPECIFIED: DIMENSIONS ARE IN MILLIMETERS SURFACE FINISH: TOLERANCES: LINEAR: ANGULAR:	FINISH:		DEBURR AND BREAK SHARP EDGES	DO NOT SCALE DRAWING		REVISION	
	NAME	SIGNATURE	DATE	TITLE:			
DRAWN							
CHK'D							
APPV'D							
MFG							
Q.A				MATERIAL:	DWG NO. Assem1		A4
				WEIGHT:	SCALE:2:1	SHEET 1 OF 1	